C:\Acad2002_data\Sand Hollow OHV Trailhead\Sand Hollow OHV Trailhead TITLE SHEET.DWG, 7/18/2007 10:07:17 AM, LMS

STATE OF UTAH
DIVISION OF FACILITIES AND CONSTRUCTION MANAGEMENT

PROJECT NO.	SHEET NO.
07265510	1

ISSUE DATE 7-16-2007

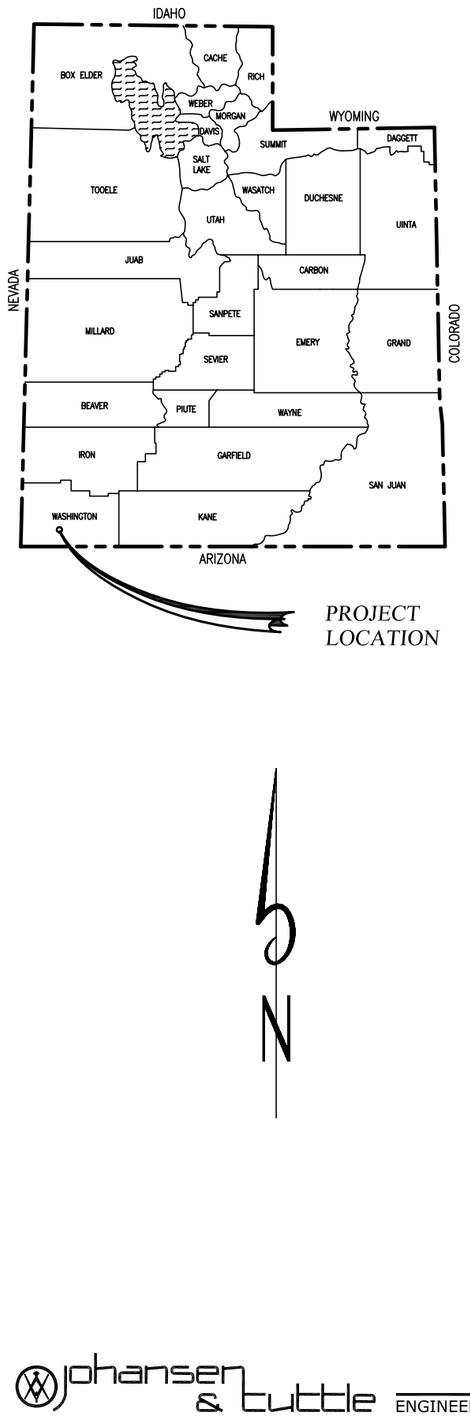

SAND HOLLOW STATE PARK
OHV TRAILHEAD
PROJECT NO. 07265510
2007

RECOMMENDED FOR APPROVAL:

PROJECT ENGINEER — DATE 7-16-07

LICENSED PROFESSIONAL ENGINEER No. 146602 CRAIG E. JOHANSEN STATE OF UTAH

APPROVALS:

STATE OF UTAH DFCM — DATE 7-18-06

UTAH STATE DIVISION OF PARKS AND RECREATION — DATE 7-18-06

johansen & tuttle ENGINEERING INC.
BOX 487, CASTLE DALE, UTAH 84513 (435) 381-2523
FAX (435) 381-2522 email jt@etv.net

C:\Acad2002_data\Sand Hollow OHV Trailhead\Sand Hollow OHV Trailhead INDEX AND SUMMARY.DWG, 7/18/2007 10:08:00 AM, LMS

INDEX TO SHEETS

SHEET	DESCRIPTION
1	TITLE SHEET
2	INDEX TO SHEETS AND SUMMARY OF QUANTITIES
3	TYPICAL SECTIONS
4	PLAN VIEW
5	GRADING PLAN

SUMMARY OF ITEMS

ITEM	SECTION	DESCRIPTION	UNIT	QUANTITY
1	8	MOBILIZATION	LUMP	1
2	10	HOT MIX ASPHALT (HMA) (PG 58-22) 1/2 INCH MAX	SQ. FT.	90900
3	21	EXCAVATION	CU. YD.	3300
4	23	UNTREATED BASE COURSE (1" MAX) 6 INCHES THICK	CU. YD.	3000
5	23	GRANULAR BORROW	CU. YD.	11800
6	32	24 INCH CURB AND GUTTER	LIN. FT.	2180
7	32	5 FOOT SIDEWALK	LIN. FT.	110
8	32	OHV LOADING RAMP	EACH	1
9	32	RECONSTRUCT MANHOLE	EACH	1
10	51	15" CSP CULVERT (POLYMERIC COATING)	LIN. FT.	140
11	93	PAVEMENT MARKING PAINT	LUMP	1
12	94	TRAFFIC SIGN 30x30 TYPE A2 METAL POST TYPE P2	EACH	2

DESIGNED HRT	4-07	CHECKED LMS	4-07
DRAWN LMS	4-07	CHECKED HRT	4-07
SURVEYED BHT	4-07	CHECKED LMS	4-07
R.O.W.		CHECKED	

johansen & tuttle ENGINEERING INC
BOX 487, CASTLE DALE, UTAH 84513 (435) 381-2523
FAX (435) 381-2522 email jt@etv.net

STATE OF UTAH DFCM
SAND HOLLOW STATE PARK OHV TRAILHEAD
PROJECT No. 07265510

INDEX TO SHEETS
AND SUMMARY OF ITEMS

ISSUE DATE
7-16-2007

SHEET NO.
2

C:\Acad2002_data\Sand Hollow OHV Trailhead\Sand Hollow OHV Trailhead TYPICAL SECTIONS.DWG, 7/18/2007 10:08:36 AM, LMS

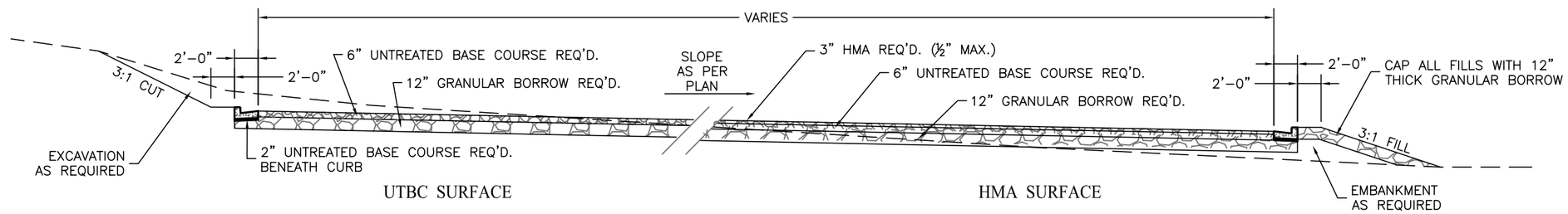

TYPICAL SECTION

NOTES:

1. BEFORE MANHOLE GRADES ARE RAISED, PLYWOOD SHALL BE PLACED OVER THE MANHOLE BENCH TO PREVENT MATERIAL FROM ENTERING THE SEWER SYSTEM.

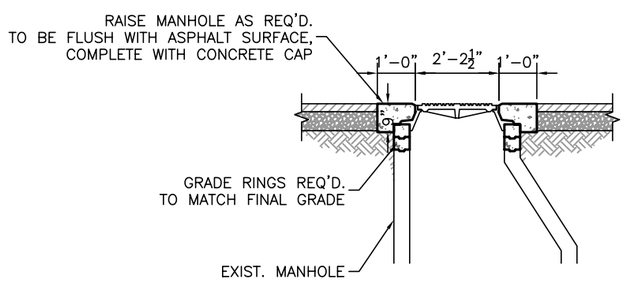

RECONSTRUCT MANHOLE DETAIL

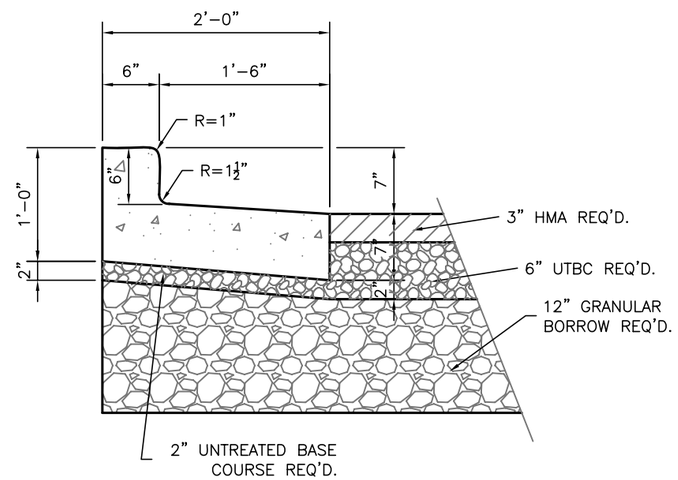

OUT SLOPE CURB DETAIL

NOTE : ALL CONCRETE WILL BE COLORED TO MATCH SURROUNDING SAND AND BE INTEGRALLY MIXED

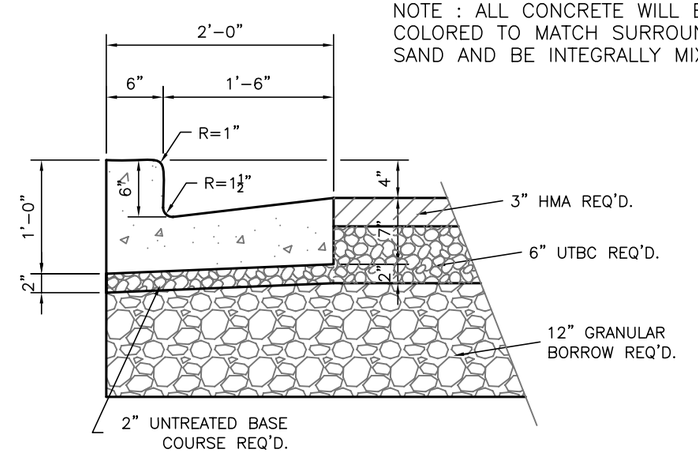

IN SLOPE CURB DETAIL

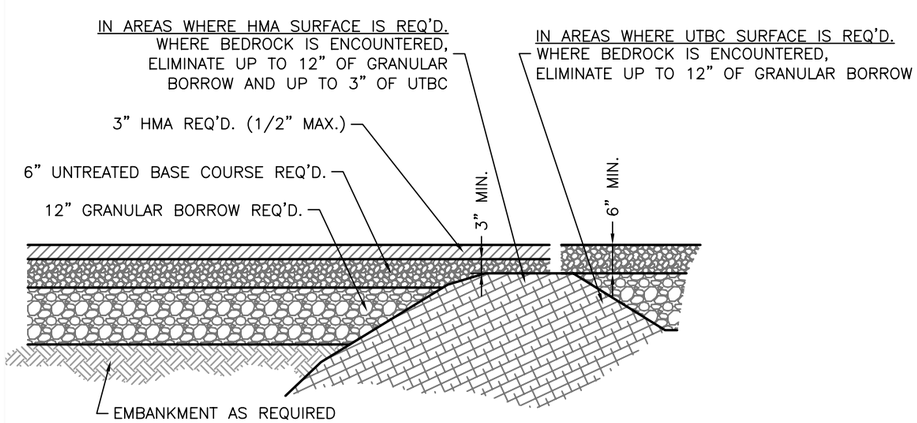

PAVEMENT DETAIL

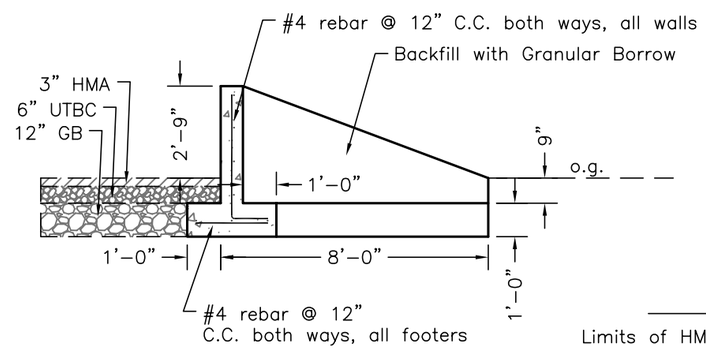

OHV LOADING RAMP SECTION VIEW

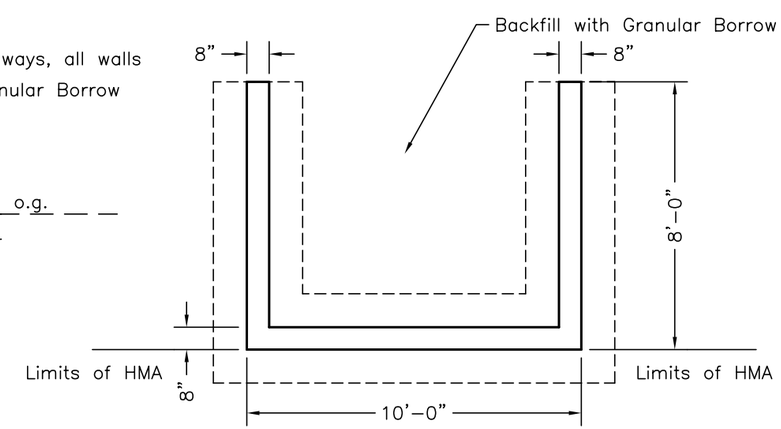

OHV LOADING RAMP PLAN VIEW

DESIGNED HRT	4-07	CHECKED LMS	4-07
DRAWN LMS	4-07	CHECKED HRT	4-07
SURVEYED BHT	4-07	CHECKED LMS	4-07
R.O.W.		CHECKED	

johansen & tuttle ENGINEERING INC.
BOX 487, CASTLE DALE, UTAH 84513 (435) 381-2523
FAX (435) 381-2522 email jt@etv.net

STATE OF UTAH DFCM
SAND HOLLOW STATE PARK OHV TRAILHEAD
PROJECT No. 07265510

TYPICAL SECTIONS

ISSUE DATE 7-16-2007

SHEET NO. 3

C:\EGPT\Sand hollow corrected coordinates\Sand Hollow Correct coordinates.dwg, 7/18/2007 10:03:19 AM, LMS

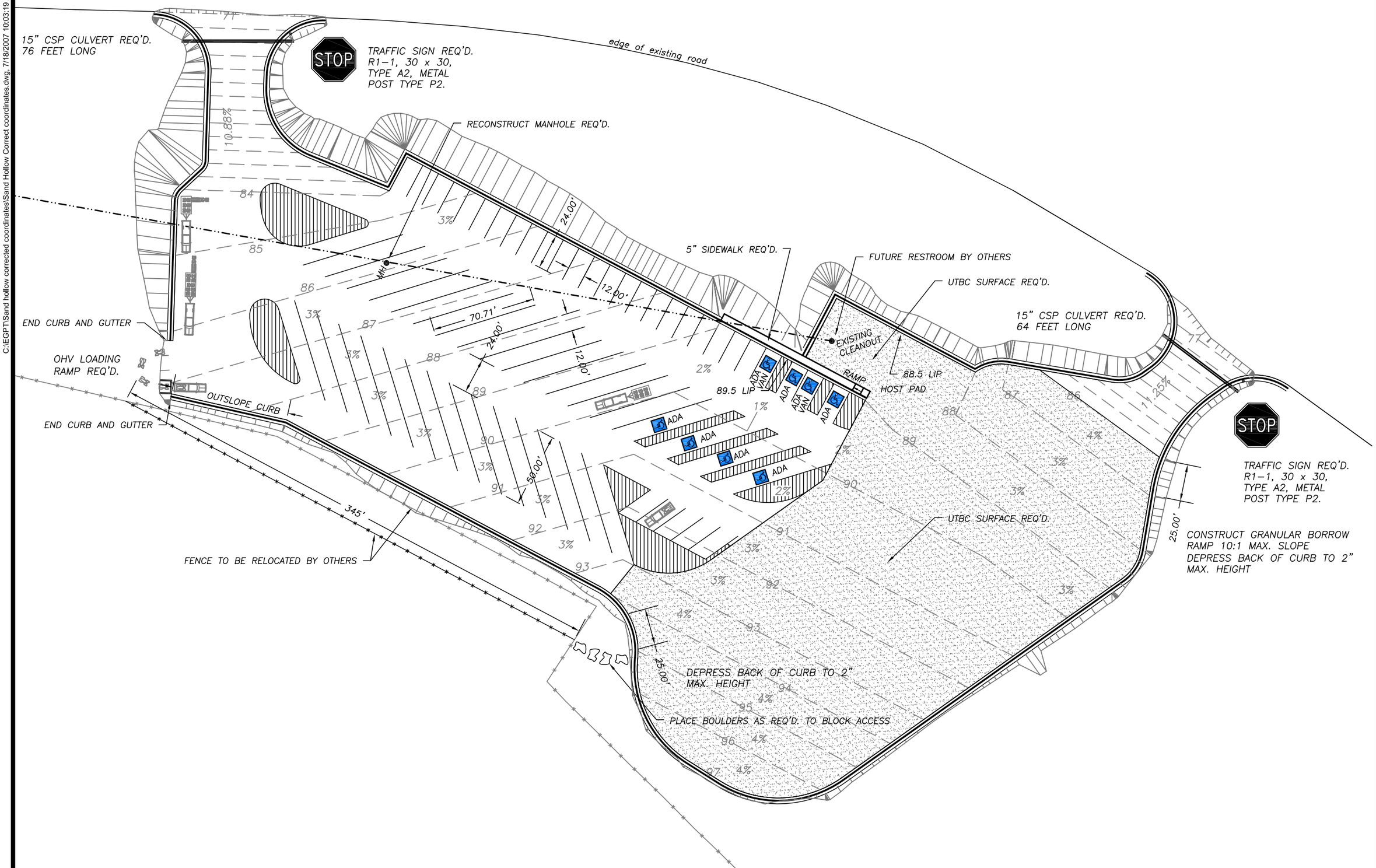

DESIGNED	HRT	4-07	CHECKED LMS 4-07
DRAWN	LMS	4-07	CHECKED HRT 4-07
SURVEYED	BHT	4-07	CHECKED LMS 4-07
R.O.W.			CHECKED

johansen & tuttle ENGINEERING INC.
BOX 487, CASTLE DALE, UTAH 84513 (435) 381-2523
FAX (435) 381-2522 email jt@etv.net

STATE OF UTAH DFCM
SAND HOLLOW STATE PARK OHV TRAILHEAD
PROJECT No. 07265510

OHV TRAILHEAD
PLAN VIEW

ISSUE DATE
7-16-2007

SHEET NO.
4

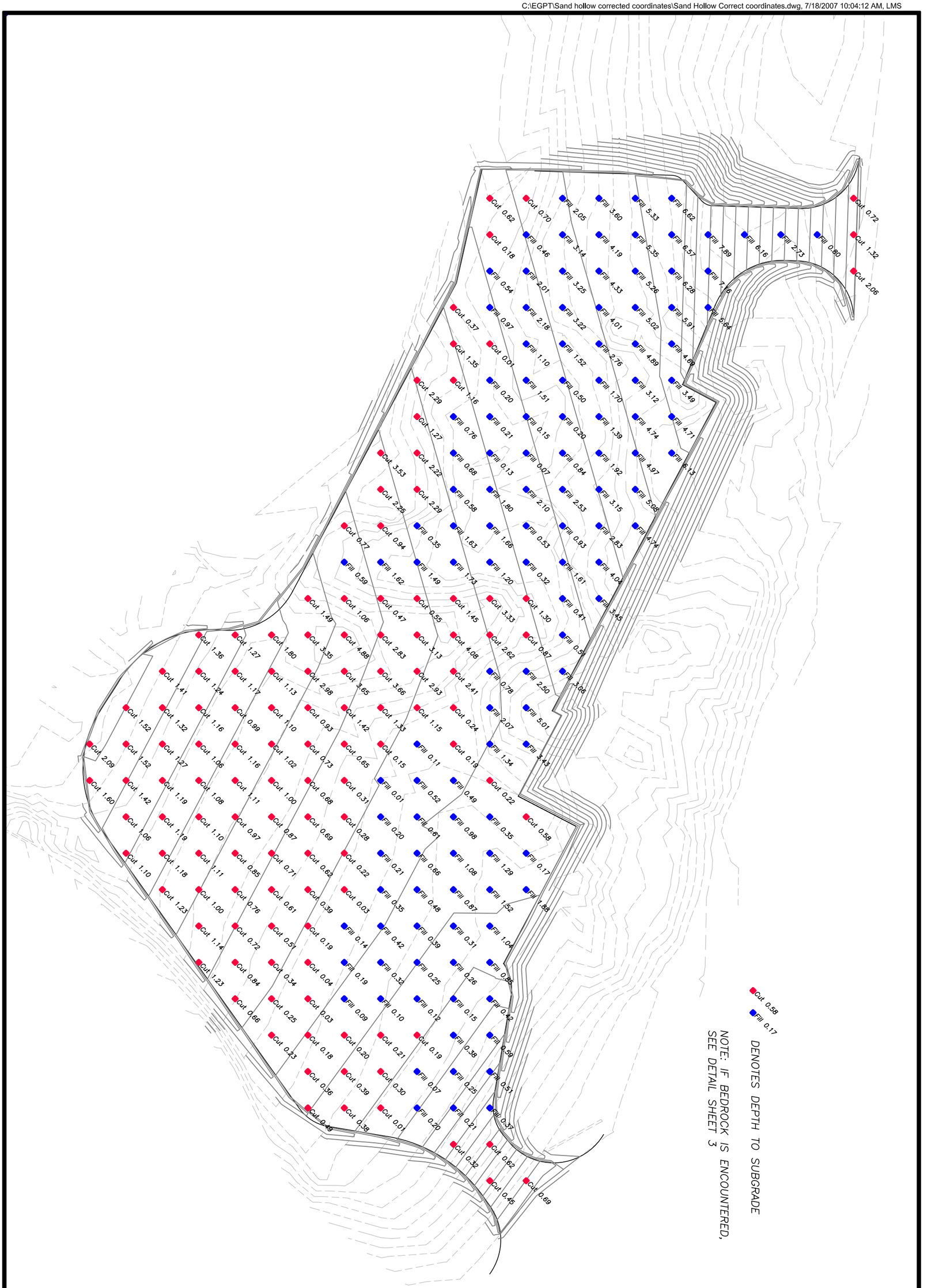

ISSUE DATE 7-16-2007 SHEET NO. 5	OHV TRAILHEAD GRADING PLAN	STATE OF UTAH DFCM SAND HOLLOW STATE PARK OHV TRAILHEAD PROJECT No. 07265510	johansen & tuttle ENGINEERING INC. BOX 487, CASTLE DALE, UTAH 84513 (435) 381-2523 FAX (435) 381-2522 email jt@etv.net	DESIGNED HRT	4-07	CHECKED LMS	4-07
				DRAWN LMS	4-07	CHECKED HRT	4-07
				SURVEYED BHT	4-07	CHECKED LMS	4-07
				R.O.W.		CHECKED	