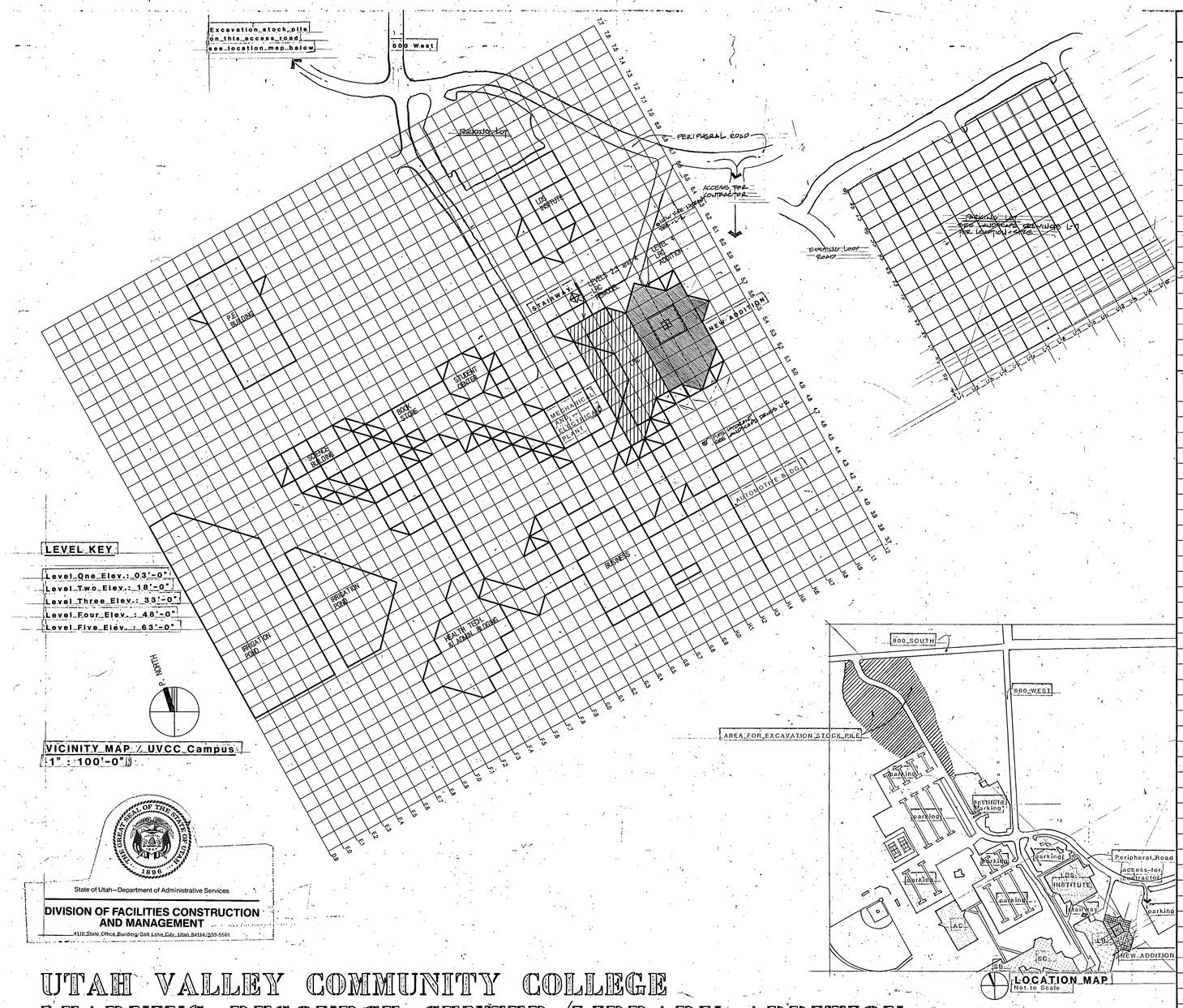

State of Utah—Department of Administrative Services

DIVISION OF FACILITIES CONSTRUCTION AND MANAGEMENT

4110 State Office Building/Salt Lake City, Utah 84114/533-5561

UTAH VALLEY COMMUNITY COLLEGE
LEARNING RESOURCE CENTER/LIBRARY ADDITION

DFCM PROJECT No. RV:90-014

INDEX TO DRAWINGS

SITE DEVELOPMENT		**STRUCTURAL**	
L-1	DEMOLITION AND GRADING PLAN	S-1	FOOTINGS AND FOUNDATION PLANS
L-2	LAYOUT PLAN	S-2	ROOF FRAMING PLAN
L-3	IRRIGATION PLAN	S-3	STRUCTURAL SECTION THRU SKYLIGHT
L-4	PLANTING AND LIGHTING	S-4	STAIR TOWER
L-5	LAYOUT AND GRADING PLAN	S-5	STRUCTURAL DETAILS
L-6	IRRIGATION PLAN	S-6	STRUCTURAL DETAILS
L-7	PLANTING AND LIGHTING PLAN (PARKING LOT)	S-7	SCHEDULES
L-8	LANDSCAPE DETAILS	S-8	TYPICAL DETAILS
L-9	LANDSCAPE DETAILS	S-9	GENERAL NOTES: STRUCTURAL
		MECHANICAL	
		SP-1	SITE PLAN
		M-1	MECHANICAL AND PLUMBING LEGEND
		M-2	MECHANICAL, PLUMBING & DEMO LEVEL 2, NORTH
		M-3	MECHANICAL, PLUMBING & DEMO LEVEL 2, SOUTH
ARCHITECTURAL		M-4	MECHANICAL, PLUMBING & DEMO LEVEL 3, NORTH
SP-1	SITE PLAN ROOF PLAN	M-5	MECHANICAL, PLUMBING & DEMO LEVEL 3, SOUTH
A-1	FLOOR PLAN LEVEL 2, NORTH	M-6	MECHANICAL, PLUMBING & DEMO LEVEL 4, WEST
A-2	FLOOR PLAN LEVEL 2, SOUTH	M-7	MECHANICAL LEVEL 4, EAST
A-3	FLOOR PLAN LEVEL 3, NORTH	M-8	PLUMBING LEVEL 4, EAST
A-4	FLOOR PLAN LEVEL 3, SOUTH	M-9	1/4" SCALE MECHANICAL ROOM PLAN AND SECTIONS
A-5	FLOOR PLAN LEVEL 4, WEST	M-10	1/4" SCALE MECHANICAL ROOM SECTIONS NOT SUBMITTED
A-6	FLOOR PLAN LEVEL 4, EAST	M-11	1/4" SCALE PLUMBING PLAN AND DETAILS
A-7	REFLECTED CEILING LEVEL 2, NORTH	M-12	HEATING AND CHILLED WATER SCHEMATIC
A-8	REFLECTED CEILING LEVEL 2, SOUTH	M-13	MECHANICAL AND PLUMBING SCHEDULES
A-9	REFLECTED CEILING LEVEL 3, NORTH	M-14	DETAILS
A-10	REFLECTED CEILING LEVEL 3, SOUTH	M-15	DETAILS
A-11	REFLECTED CEILING LEVEL 4, WEST		
A-12	REFLECTED CEILING LEVEL 4, EAST		
A-13	ELEVATIONS		
A-14	ELEVATIONS AND DETAILS		
A-15	BUILDING SECTIONS		
A-16	ELEVATIONS		
A-17	WALL SECTIONS		
A-18	WALL SECTIONS AND DETAILS		
A-19	DOOR SCHEDULE AND DETAILS		
A-20	WINDOW SCHEDULE		
A-21	WINDOW SCHEDULE AND GLAZING DETAILS		
A-22	GLAZING DETAILS		
A-23	STAIR DETAILS AND ELEVATOR		
A-24	MISCELLANEOUS DETAILS		
A-25	INTERIOR ELEVATIONS AND ENLARGED FLOOR PLANS	**ELECTRICAL**	
A-26	FINISH SCHEDULE	E1-1	NOTES AND SCHEDULES
		E2-1	LIGHTING PLAN LEVEL 2, NORTH
		E2-2	LIGHTING PLAN LEVEL 2, SOUTH
		E2-3	LIGHTING PLAN LEVEL 3, NORTH
		E2-4	LIGHTING PLAN LEVEL 3, SOUTH
		E2-5	LIGHTING PLAN LEVEL 4, EAST
		E2-6	LIGHTING PLAN LEVEL 5
		E3-1	POWER PLAN LEVEL 2, NORTH
		E3-2	POWER PLAN LEVEL 2, SOUTH
		E3-3	POWER PLAN LEVEL 3, NORTH
		E3-4	POWER PLAN LEVEL 3, SOUTH
		E3-5	POWER PLAN LEVEL 4, EAST
		E3-6	POWER PLAN LEVEL 4, WEST
		E5-1	ONE LINE DIAGRAM, SCHEMATIC
		E6-1	PANEL SCHEDULES
		E1-1	ELECTRICAL DETAILS

Board of Regents: Dee Alexander — Date: 2-12-91

Agency Approval: Fred L. Chappell — Date: 2-14-91

DFCM Approval: Wayne J. Brigham — Date: 2.12.91

STATE OF UTAH — SCOTT, LOUIE & BROWNING — P.E. 1148 ARCH. 220 ARCH. 432 — Salt Lake City — LICENSED ARCHITECTS & ENGINEERS

DFCM DESIGN & CODE CRITERIA
(For owners use only)

Seismic Zone: 3 — Gross Sq. Feet: 29,445
Occupancy(ies)[1]: B-2 — Net Sq. Feet: 27,660
Building Type(s)[1]: II | hr — Ratio:
Construction Budget:
Miscellaneous:

Architectural[2]	1988 UNIFORM BUILDING CODE
Handicapped[2]	1978 UTAH HANDICAP CODE
HVAC[2]	1988 UTAH PLUMBING CODE
Plumbing[2]	1988 UTAH PLUMBING CODE
Energy[2]	1987 UT. ENERGY CONSERV'N C.
~~Structural~~	1988 UNIFORM BUILDING CODE
Electrical[2]	1990 NATIONAL ELECTRICAL CODE

[1]Approved by State Fire Marshal
[2]Applicable Issue(s) of Codes & Supplements

DFCM PRE-BID STAFF REVIEW
Division of Facilities Construction and Management

Arch. Specs — Date 2-12-91 — Plumbing — Date 2-12-91
Arch. Drawings — Date 2-12-91 — HVAC — Date 2-12-91
Handicapped — Date 2/12/91 — Energy — Date 2/12/91
Program — Yes — No — Date — Structural — Date 2/12/91
Landscaping — Date — Date
OTHER AGENCIES
State Departments of Health — Date — Agency — Date — Fire Marshal — Date
REVIEW DOES NOT RELIEVE A/E OF DESIGN LIABILITY

0000AQC1
Utah Valley Community College, Learning Resource Center - RV 90-014
Cover Sheet - 7197

AS BUILTS

STRUCTURAL ENGINEER	: Baumek Mu and Associates	575-8223
MECHANICAL ENGINEER	: VanBoerum and Frank	530-3148
ELECTRICAL ENGINEER	: Becherer Nielson and Associates	532-2196
LANDSCAPE ARCHITECT	: MGB and Associates	364-9696
INTERIOR DESIGNER	: Don Harward	521-0544

Scott, Louie and Browning
architects, engineers, planners
4765 Holladay Boulevard, Salt Lake City, Utah 84117
272-8837

Cover Sheet

Utah Valley Community College
Learning Resource Center/Library Addition
Orem, Utah DFCM Project No. RV:90-014

C-1

Feb. 18, 1991

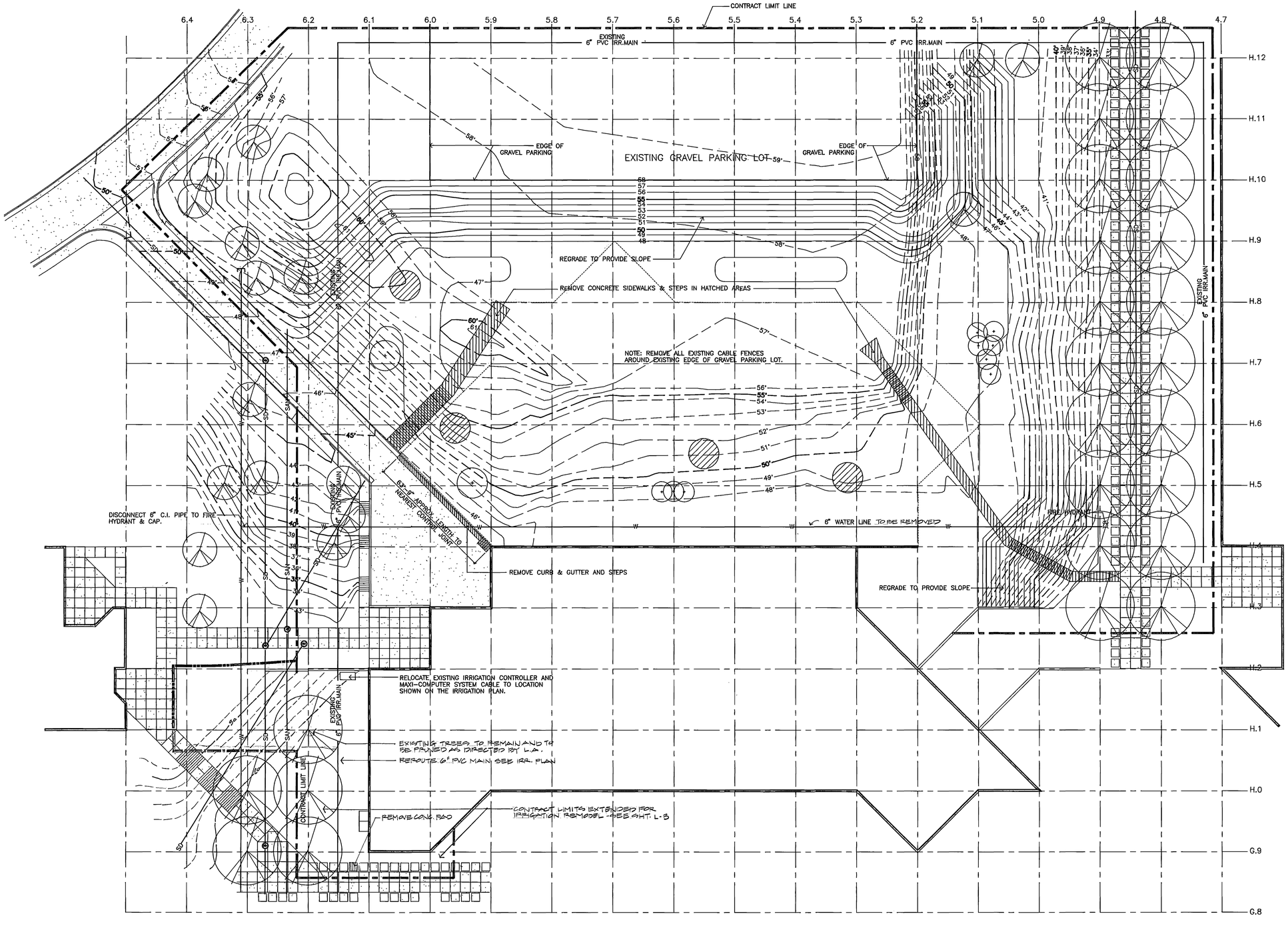

LEGEND

- EXISTING TREES TO REMAIN
- EXISTING TREES TO BE TRANSPLANTED AS INDICATED ON PLANTING PLAN
- EXISTING TREES TO BE REMOVED
- EXISTING PAVEMENT TO REMAIN

NOTES

1. REMOVE EXISTING SOD ON SITE WHERE REGRADING OCCURS OR NEW ELEMENTS ARE ADDED.
2. REMOVE EXISTING SPRINKLER SYSTEM WHERE A NEW SYSTEM IS SHOWN TO REPLACE THE EXISTING ONE. SEE IRRIGATION PLAN FOR NEW LAYOUT.
3. EXTEND LIMITS OF DEMOLITION AND GRADING BEYOND THOSE INDICATED WHERE REQUIRED TO MAKE A SMOOTH TRANSITION WITH EXISTING CONDITIONS.
4. VERIFY LOCATION OF ALL UTILITIES PRIOR TO CONSTRUCTION. COMMUNICATE POSSIBLE CONFLICTS WITH PROJECT MANAGER.

0 20 40 60

SCALE: 1"=20'

0000AQL1
Utah Valley Community College; Learning Resource Center - RV:90-014
Demolition and Grading Plan - 7198

AS BUILTS

STATE OF UTAH LEONARD M. GRASSLI No. 27 LICENSED LANDSCAPE ARCHITECT

Demolition & Grading Plan

Scott, Louie and Browning
architects, engineers, planners
4766 Holladay Boulevard, Salt Lake City, Utah 84117

Utah Valley Community College
Learning Resource Center/Library Addition

Orem, Utah DFCM Project No.RV:90-014

L-1

Feb. 18, 1991

MONSEN ENGINEERING CO 108657

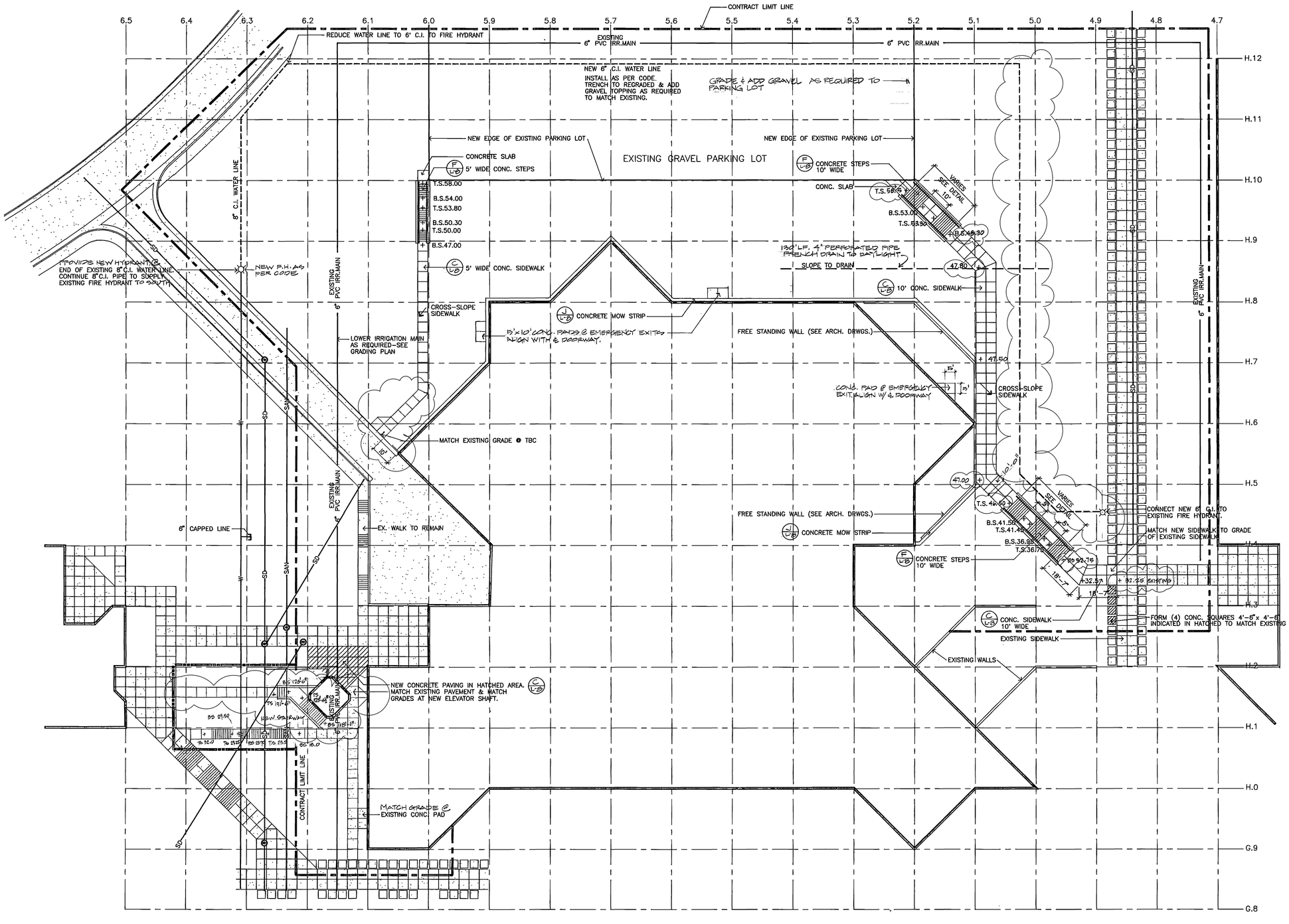

LEGEND

EXISTING PAVEMENT

NOTE

1. LAYOUT IS BASED ON 30' GRID. SIDEWALKS SHOWN AT ANGLES ARE ON 45 DEGREE ANGLES.
2. SEE DEMOLITION & GRADING PLAN FOR ADDITIONAL GRADING INFORMATION.

0 20 40 60

SCALE: 1"=20'

0000AQL2
Utah Valley Community College; Learning Resource Center - RV:90-014
Layout Plan - 7199

AS BUILTS

STATE OF UTAH LEONARD M. GRASSLI No. 27 LICENSED LANDSCAPE ARCHITECT

Layout Plan

Scott, Louie and Browning
architects, engineers, planners
4766 Holladay Boulevard, Salt Lake City, Utah 84117

Utah Valley Community College
Learning Resource Center/Library Addition

Orem, Utah DFGM Project No.RV:90-014

L-2

Feb. 18, 1991

MONSEN ENGINEERING CO 108657

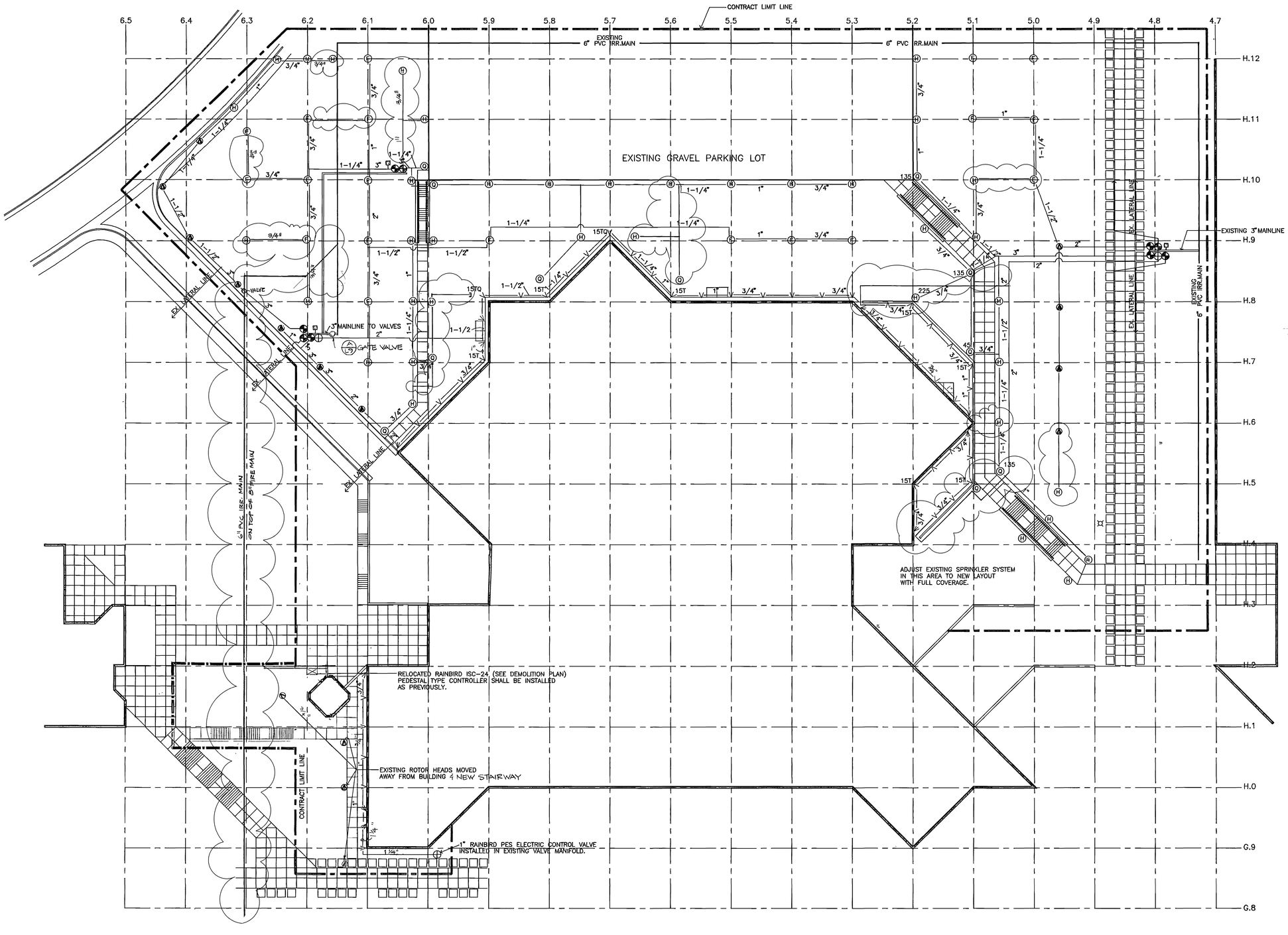

IRRIGATION LEGEND

Ⓕ Ⓗ Ⓠ	RAINBIRD 21A FULL CIRCLE & 27A PART CIRCLE IMPACT ROTOR NOZZLE #10 (PSI @ 60)
V V	RAINBIRD 1804 15' RADIUS SPRAY HEAD(12"RISER FOR SHRUBS)
Ⓐ	EXISTING IMPACT ROTOR HEAD TO REMAIN
———	EXISTING 6" PVC IRRIGATION MAIN TO REMAIN
———	PVC SCHEDULE 40 LATERAL LINE (SIZE AS NOTED)
2" 11/2"	RAINBIRD PES SCRUBBER ELECTRIC CONTROL VALVE
⊡	QUICK COUPLER

1. SLEEVE ALL IRRIGATION LINES AND ELECTRICAL WIRES THAT RUN UNDER CONCRETE OR ASPHALT PAVEMENT OF ADEQUATE SIZE.
2. ADJUST EXISTING SPRINKLER SYSTEM TO CONFORM TO PROPOSED CHANGES AND TO PROVIDE FULL COVERAGE.
3. REPLACE ALL EXISTING REMOTE CONTROL VALVES INSIDE CONTRACT LIMIT LINE WITH NEW PES VALVES.
4. REMOVE EXISTING SPRINKLER SYSTEM WHERE NEW HEADS ARE SHOWN ON IRRIGATION PLAN AND REUSE EXISTING HEADS #21A & #27A FOR NEW IRRIGATION LAYOUT.
5. RELOCATE EXISTING IRRIGATION CONTROLLER (RAINBIRD ISC-24) AS SHOWN ON PLAN AND WIRE ANY ADDITIONAL VALVES TO UNUSED STATIONS. TAKE CARE IN RELOCATING MAXI-COMPUTER SYSTEM CABLE.
6. INSTALL A GATE VALVE AND PRESSURE REDUCING VALVE AT VALVE MANIFOLD AS PER DETAIL IF NONE EXISTS.
7. RETURN UNUSED HEADS REMOVED FOR CONSTRUCTION TO OWNER.
8. PROVIDE ISOLATION VALVES ON ALL NEW VALVE BANKS.

0 20 40 60

SCALE: 1"=20'

0000AQL3
Utah Valley Community College, Learning Resource Center - RV 90-014
Irrigation Plan - 7200

AS BUILTS

STATE OF UTAH
LEONARD H. GRASSLI
No. 27
LICENSED LANDSCAPE ARCHITECT

Irrigation Plan

Scott, Louie and Browning
architects, engineers, planners
4766 Holladay Boulevard Salt Lake City Utah 84117

Utah Valley Community College
Learning Resource Center/Library Addition

Orem, Utah DFCM Project No.RV:90-014

L-3
Feb. 18, 1991

MONSEN ENGINEERING CO 106657

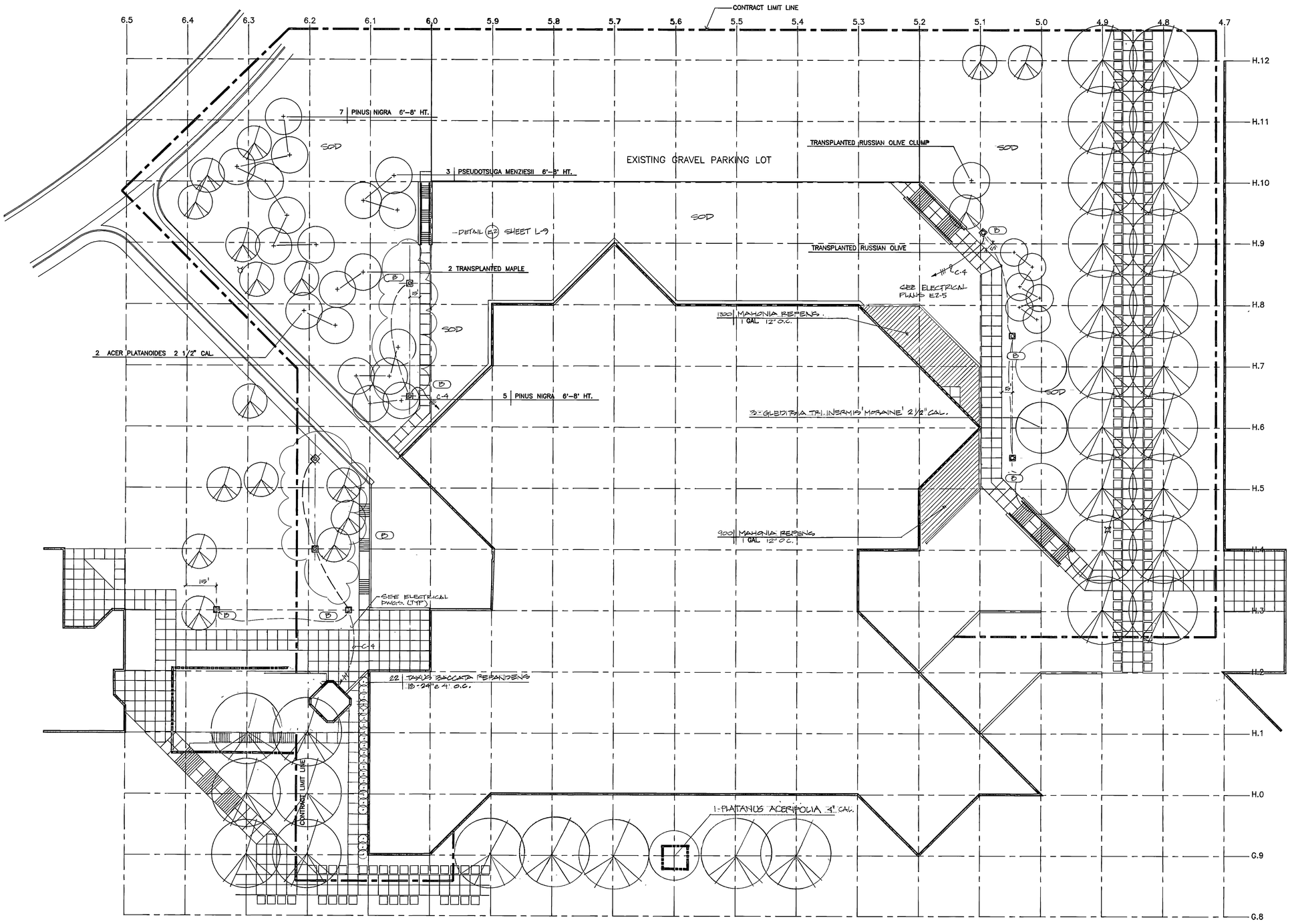

NOTE
RESOD EXISTING LAWN DAMAGED BY CONSTRUCTION. EXTEND RESODDING AND LANDSCAPING WHERE NECESSARY TO BLEND WITH EXISTING CONDITIONS, TO PROVIDE A NATURAL TRANSITION.

LEGEND

EXISTING TREES TO REMAIN

0 20 40 60

SCALE: 1"=20'

0000AQL4
Utah Valley Community College, Learning Resource Center - RV 90-014
Planting and Lighting - 7201

AS BUILTS

STATE OF UTAH LEONARD M. GRASSLI No. 27 LICENSED LANDSCAPE ARCHITECT

Planting & Lighting Plan

Scott, Louie and Browning
architects, engineers, planners
4766 Holladay Boulevard Salt Lake City Utah 84117

Utah Valley Community College
Learning Resource Center/Library Addition

Orem, Utah DFCM Project No.RV:90-014

L-4
Feb. 18, 199

MONSEN ENGINEERING CO 108657

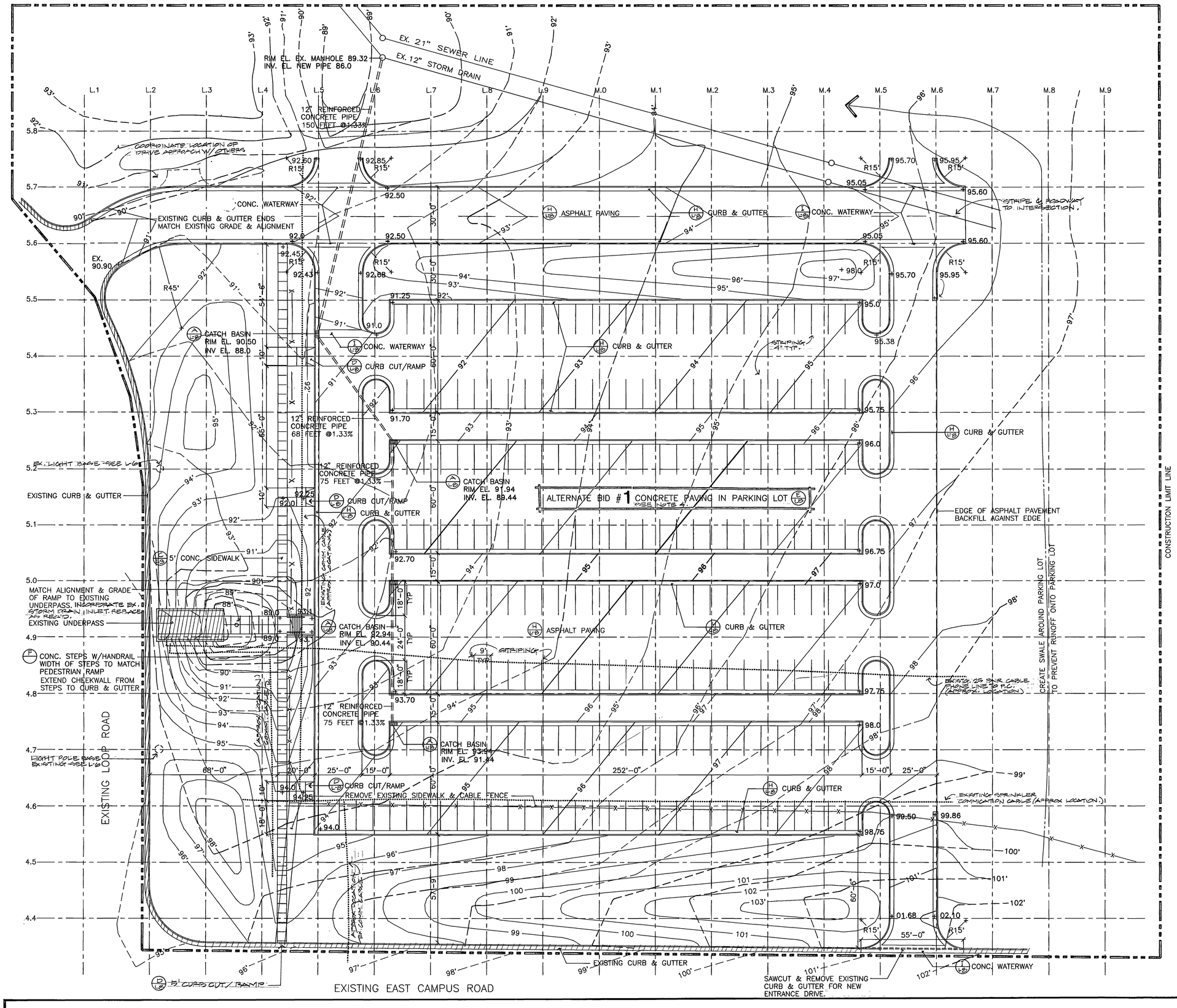

LAYOUT IS BASED ON 30'-0" GRID.

NOTES

1. LOCATION OF UTILITIES IS SCHEMATIC ONLY. VERIFY ACTUAL LOCATIONS OF ALL UTILITIES PRIOR TO CONSTRUCTION.
2. REMOVE EXISTING SOD ON SITE WHERE REGRADING OCCURS OR NEW ELEMENTS ARE ADDED.
3. REMOVE EXISTING IRRIGATION LATERAL LINES & CONTROL VALVES. DELIVER EXISTING ROTOR HEADS TO OWNER. VERIFY LOCATIONS OF UTILITIES.
4. IF ALTERNATE IS ACCEPTED, CONTROL JOINTS SHALL BE SAWCUT @ 10' x 10' (APPROX. MAX. SPACING) AND SHOP DRAWINGS SHALL BE PROVIDED FOR APPROVAL BY ARCHITECT. CONTROL JTS. SHALL BE 1/3 DEPTH OF CONC. SLAB.

0 20 40 60

SCALE: 1" = 20'

STATE OF UTAH
LEONARD M. GRASSLI
No. 27
LICENSED LANDSCAPE ARCHITECT

0000AQL5
Utah Valley Community College, Learning Resource Center - RV 90-014
Layout and Grading Plan - 7202

AS BUILTS

Layout & Grading Plan

Scott, Louie and Browning
architects, engineers, planners
4766 Holladay Boulevard Salt Lake City Utah 84117

Utah Valley Community College
Learning Resource Center/Library Addition

Orem, Utah DFCM Project No.RV:90-014

L-5
Feb. 18, 1991

MONSEN ENGINEERING CO 108657

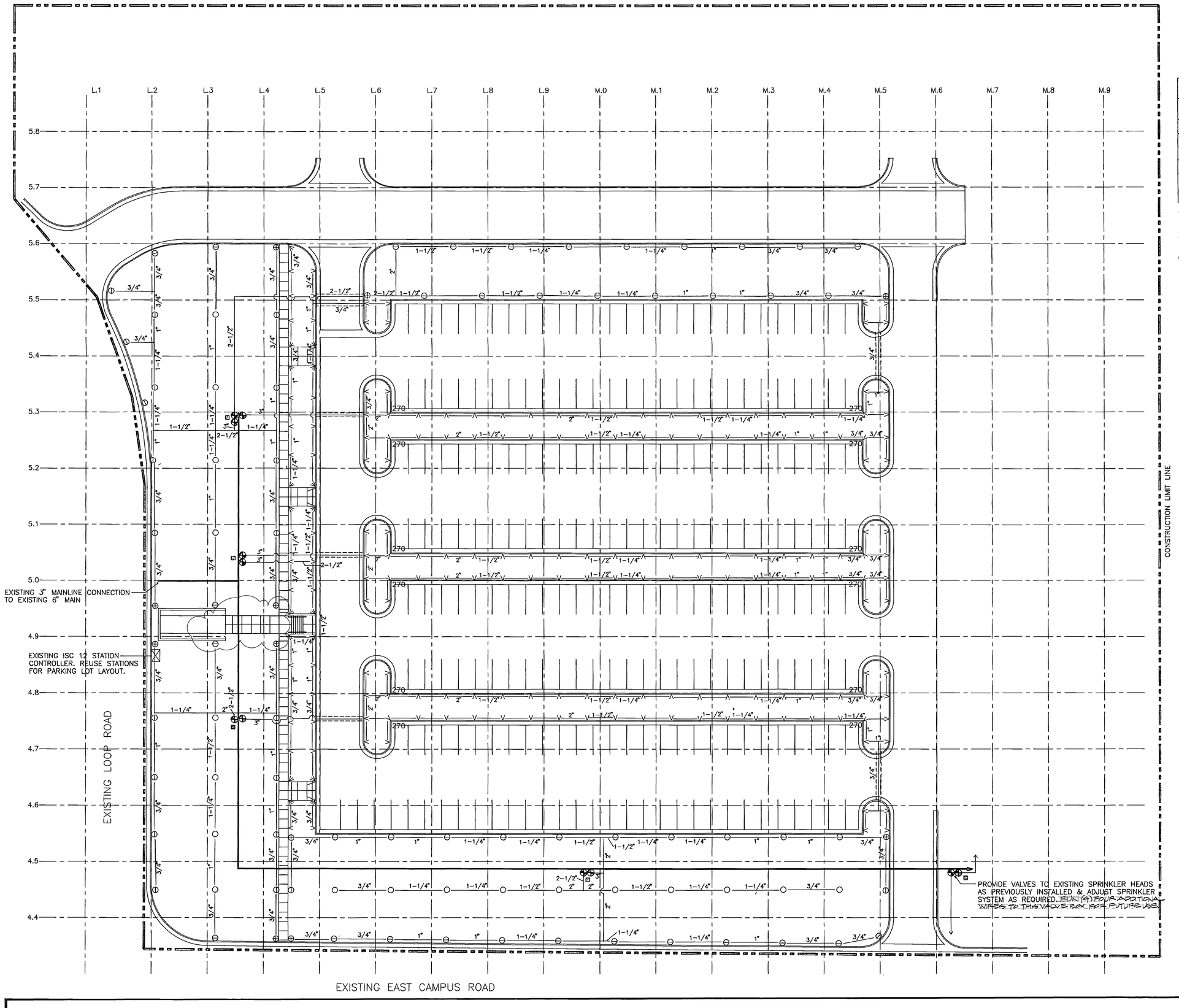

IRRIGATION LEGEND

F H Q	RAINBIRD MAXI-PAW (NOZZLE 12=F 08=H 06=Q) PSI @ 45
V V	RAINBIRD 1804 15' RADIUS SPRAY HEAD
	EXISTING 3" MAIN LINE TO REMAIN
	PVC SCHEDULE 40 LATERAL LINE (SIZE AS NOTED)
	PVC SLEEVE (SIZE AS REQUIRED)
	RAINBIRD 200-PES SCRUBBER ELECTRIC CONTROL VALVE
	QUICK COUPLER

1. SLEEVE ALL IRRIGATION LINES AND ELECTRICAL WIRES THAT RUN UNDER CONCRETE OR ASPHALT PAVEMENT OF ADEQUATE SIZE.
2. REMOVE AND DELIVER ALL EXISTING ROTOR POP-UP SPRINKLER HEADS LOCATED ON CONSTRUCTION SITE TO OWNER.
3. PROVIDE ISOLATION VALVE AT EACH VALVE BANK.

0000AQL6
Utah Valley Community College, Learning Resource Center - RV 90-014
Irrigation Plan - 7203

0 20 40 60
SCALE: 1"=20'

STATE OF UTAH LEONARD M. GRACSLI No. 27 LICENSED LANDSCAPE ARCHITECT

AS BUILTS

Irrigation Plan

Scott, Louie and Browning
architects, engineers, planners
4766 Holladay Boulevard Salt Lake City Utah 84117

Utah Valley Community College
Learning Resource Center/Library Addition

Orem, Utah DFCM Project No.RV:90-014

L-6
Feb. 18, 1991

MONSEN ENGINEERING CO 108657

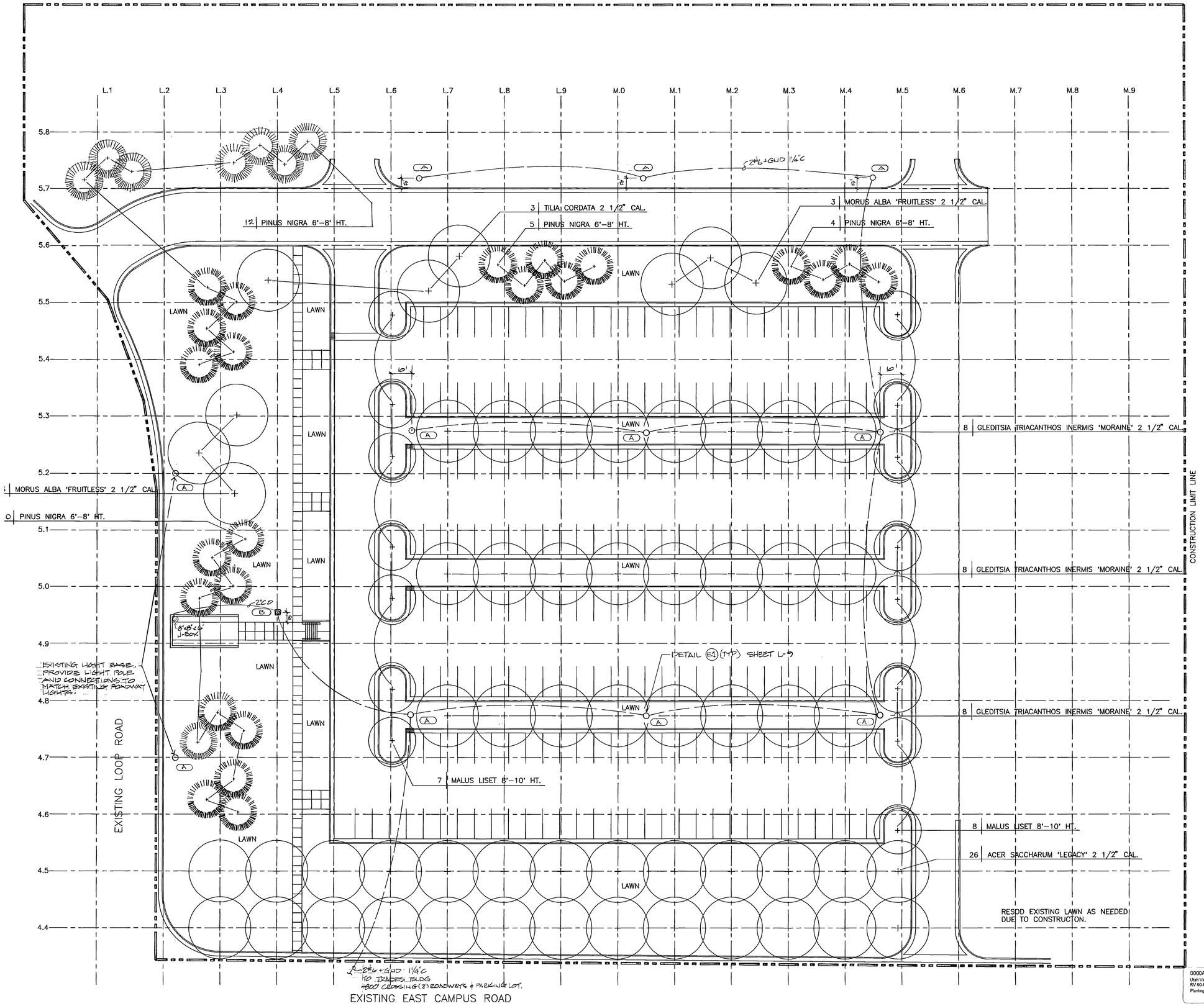

0000AQL7
Utah Valley Community College, Learning Resource Center - RV 90-014
Planting and Lighting Plan (Parking Lot) - 7204

0 20 40 60

SCALE: 1"=20'

AS BUILTS

STATE OF UTAH
LORENZO A. GRAGOLI
No. 27
LICENSED LANDSCAPE ARCHITECT

Planting & Lighting Plan (Parking Lot)

Scott, Louie and Browning
architects, engineers, planners
4766 Holladay Boulevard Salt Lake City Utah 84117

Utah Valley Community College
Learning Resource Center/Library Addition

Orem, Utah DFCM Project No.RV:90-014

L-7
Feb. 18, 1991

MONSEN ENGINEERING CO 108637

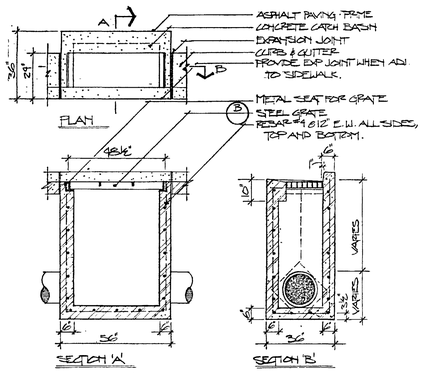

A **Catch Basin**
SCALE: 3/8" = 1'-0"

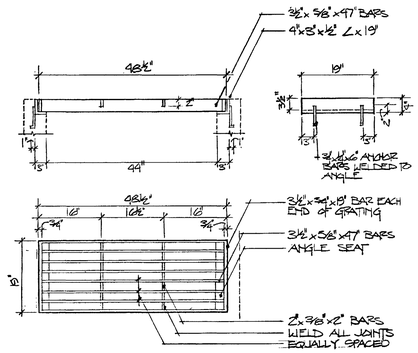

B **Catch Basin Grate**
NOT TO SCALE

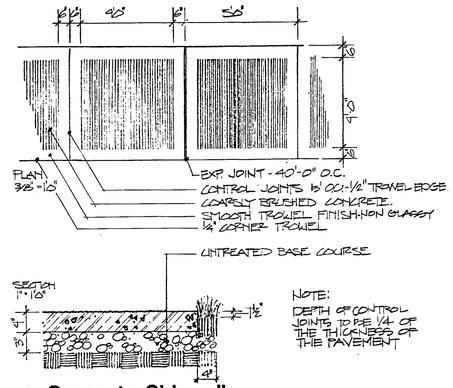

C **Concrete Sidewalk**
SCALE: GIVEN

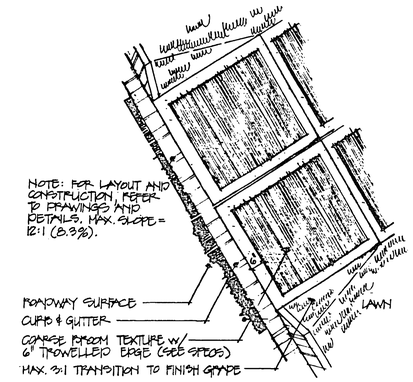

D **Curb Cut / Ramp**
NOT TO SCALE

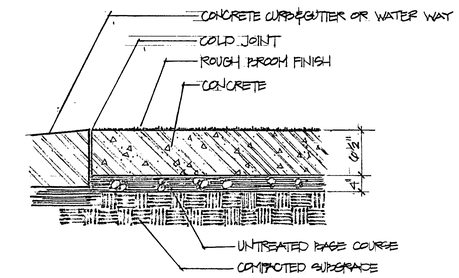

E **Concrete Roadway (Alternate)**
SCALE 3/4" = 1'-0"

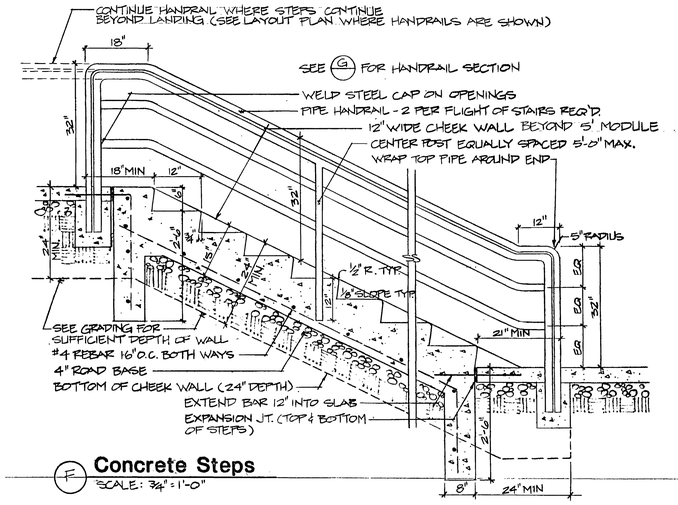

F **Concrete Steps**
SCALE: 3/4" = 1'-0"

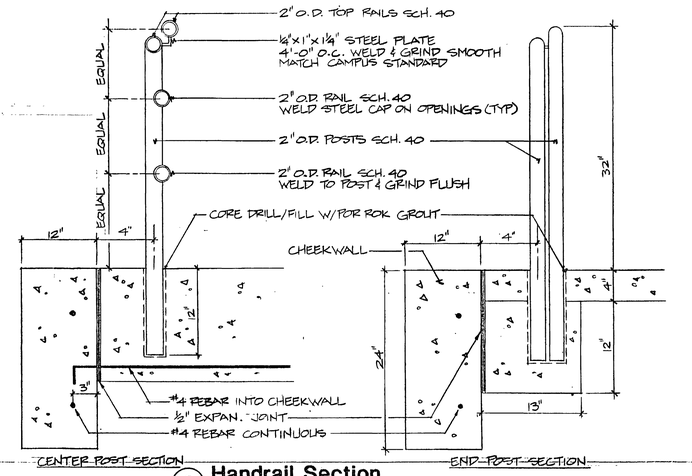

G **Handrail Section**
SCALE: 1 1/2" = 1'-0"

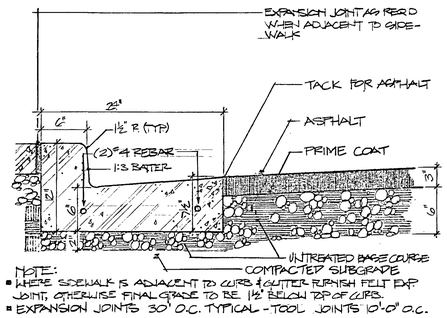

NOTE:
- WHERE SIDEWALK IS ADJACENT TO CURB & GUTTER FINISH FELT EXP JOINT, OTHERWISE FINAL GRADE TO BE 1 1/2" BELOW TOP OF CURB.
- EXPANSION JOINTS 30' O.C. TYPICAL - TOOL JOINTS 10'-0" O.C.

H **Curb and Gutter**
SCALE: 1 1/2" = 1'-0"

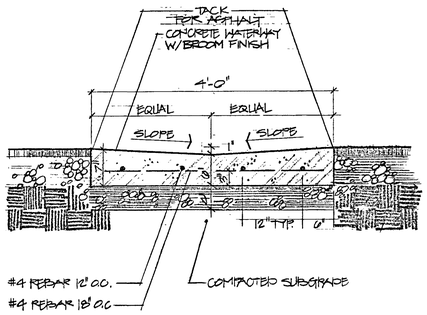

I **Waterway**
NOT TO SCALE

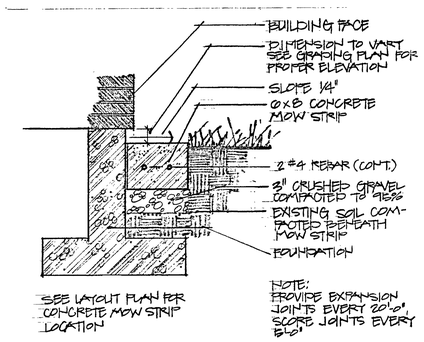

J **Concrete Mow Strip**
SCALE 1 1/2" = 1'-0"

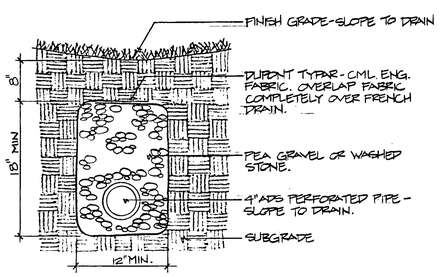

K **French Drain**
SCALE: 1 1/2" = 1'-0"

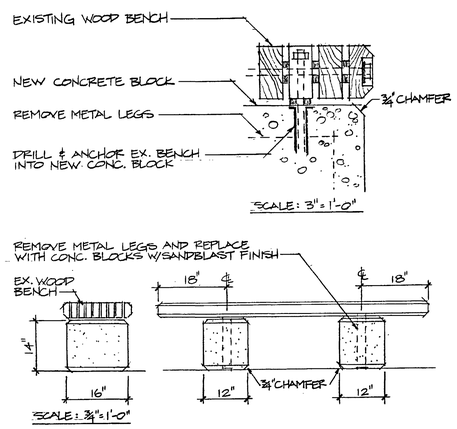

Bench Remodel 13 BENCHES

PLACEMENT OF BENCHES TO BE APPROVED BY L.A.

0000AQLB
Utah Valley Community College; Learning Resource Center - RV.90-014
Landscape Details - 7205

AS BUILTS

STATE OF UTAH
LEONARD M. CRANSHAW
No. 27
LICENSED LANDSCAPE ARCHITECT

Landscape Details

Scott, Louie and Browning
architects, engineers, planners
4766 Holladay Boulevard, Salt Lake City, Utah 84117

Utah Valley Community College
Learning Resource Center/Library Addition

Orem, Utah DFCM Project No.RV:90-014

L-8
Feb. 18, 1991

MONSEN ENGINEERING CO 108657

Thrust Block Schedule

Table 1. Thrust Developed Per 100 P.S.I. Pressure (lbs. force)

Pipe Size	Fitting 90° Elbow	Fitting 45° Elbow	Valves, Tees, Dead Ends
1½	300	200	200
2	500	300	400
3	1,000	600	800
4	1,800	1,100	1,200
6	4,000	2,300	2,800
8	7,200	4,100	5,100
10	11,200	6,300	7,900
12	16,000	9,100	11,200

Note: Thrusts from greater or lesser pressures may be proportioned.

Table 2. Estimated Soil Bearing Capability

Soil Type	lbs/ft
Muck, Peat, Fill	0
Soft Clay	500
Sand	1,000
Sand and Gravel	1,500
Sand and Gravel With Clay	2,000
Sand and Gravel Cemented With Clay	4,000
Hard Pan	5,000

Note: Values are detailed for horizontal thrusts at depths of burial where thrust exists.

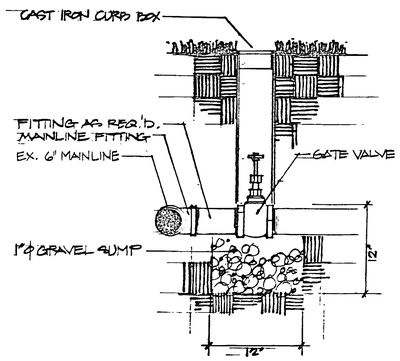

A Gate Valve
NOT TO SCALE

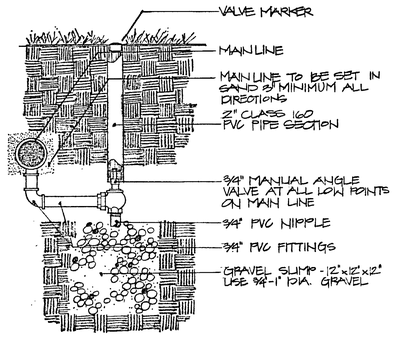

B Manual Drain Valve
NOT TO SCALE

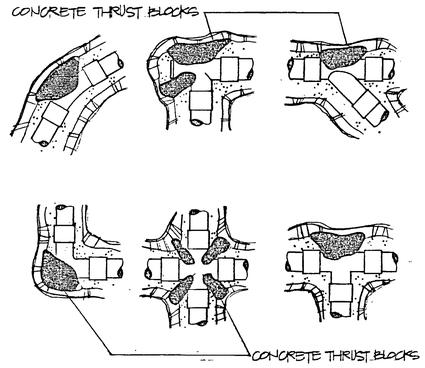

C Concrete Thrust Blocks
NOT TO SCALE

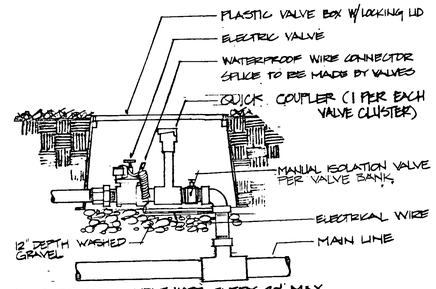

1. TAPE AND BUNDLE WIRE EVERY 20' MAX.
2. PROVIDE EXPANSION COILS AT EACH WIRE CONECTION IN VALVE BOX BY WRAPPING WIRE AROUND A 1/2" PIPE 15 TIMES.
3. COMPACT SOIL AROUND VALVE BOX TO 95% DENSITY
4. ALL THREADED CONNECTIONS TO BE COATED W/ REDGRESEAL NO 13.

D Control Valve
NOT TO SCALE

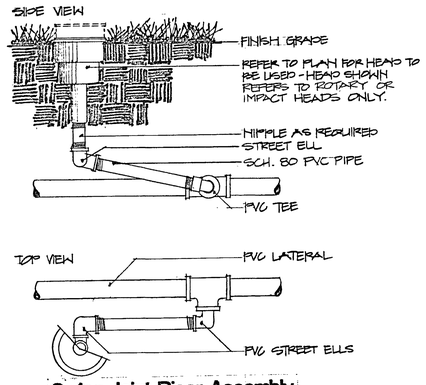

E Swing Joint Riser Assembly
NOT TO SCALE

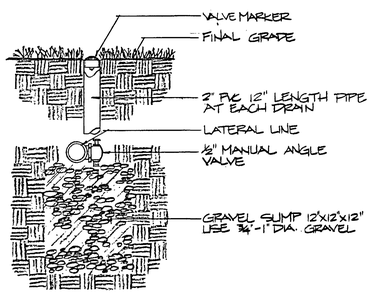

F Manual Drain Valve (Lateral Line)
NOT TO SCALE

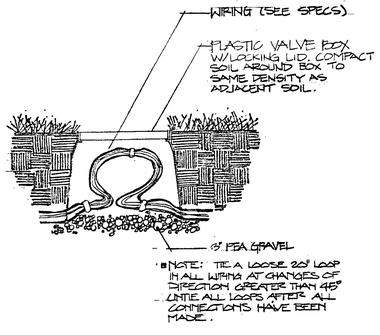

G Pull Box w/ Wire Loop
NOT TO SCALE

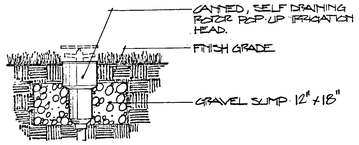

H Canned Irr. Head Sump
NOT TO SCALE

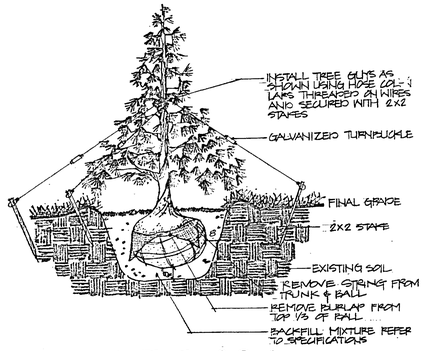

I Evergreen Planting & Guying
NOT TO SCALE

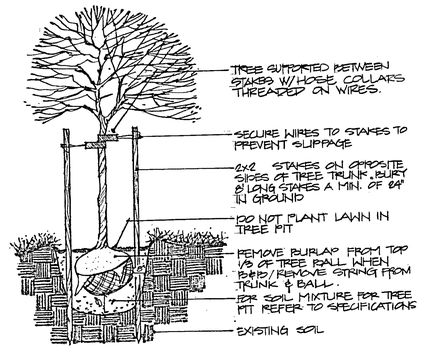

J Deciduous Planting & Staking
NOT TO SCALE

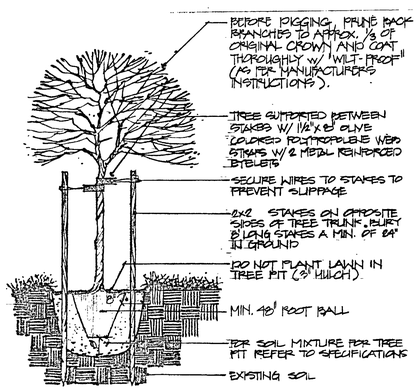

K Deciduous Tree Transplanting
NOT TO SCALE

CONTRACTOR SHALL USE MIN. 48" TREE SPADE AND SHALL PLANT IMMEDIATELY IN NEW LOCATION AFTER RIGGING. WATER THOROUGHLY ON A REGULAR BASIS & MULCH, BUT DO NOT FERTILIZE.

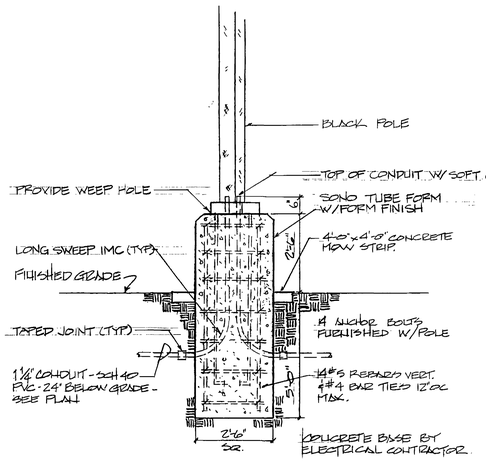

E1 Type A Mounting Detail

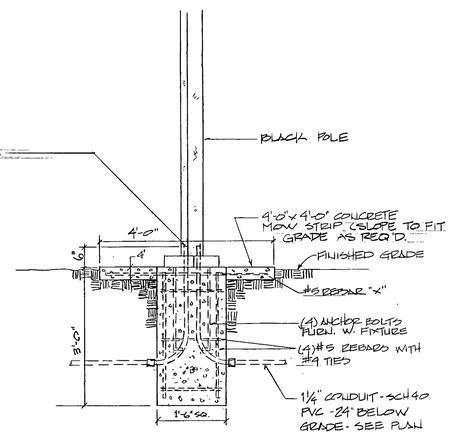

E2 Type B Mounting Detail
NOT TO SCALE

LIGHT FIXTURE SCHEDULE

TYPE	MANUFACTURER	CATALOG NO.	MOUNTING	LAMPS
A	MOLDCAST	48114-48-BLP-2FU W/A1228NC-BLP-POLE	SEE DETAIL E1	(2) 400W METAL HALIDE
B	MOLDCAST	2425-120-14-BL-8	SEE DETAIL E2	(1) 175W METAL HALIDE

0000AQL9
Utah Valley Community College; Learning Resource Center - RV:90-014
Landscape Details - 7206

AS BUILTS

STATE OF UTAH — LICENSED — A. CRAGUN — No. 27 — LICENSED LANDSCAPE ARCHITECT

Landscape Details

Scott, Louie and Browning
architects, engineers, planners
4766 Holladay Boulevard, Salt Lake City, Utah 84117

Utah Valley Community College
Learning Resource Center/Library Addition
Orem, Utah DFCM Project No.RV:90-014

L-9
Feb. 18, 1991

MONSEN ENGINEERING CO 108857

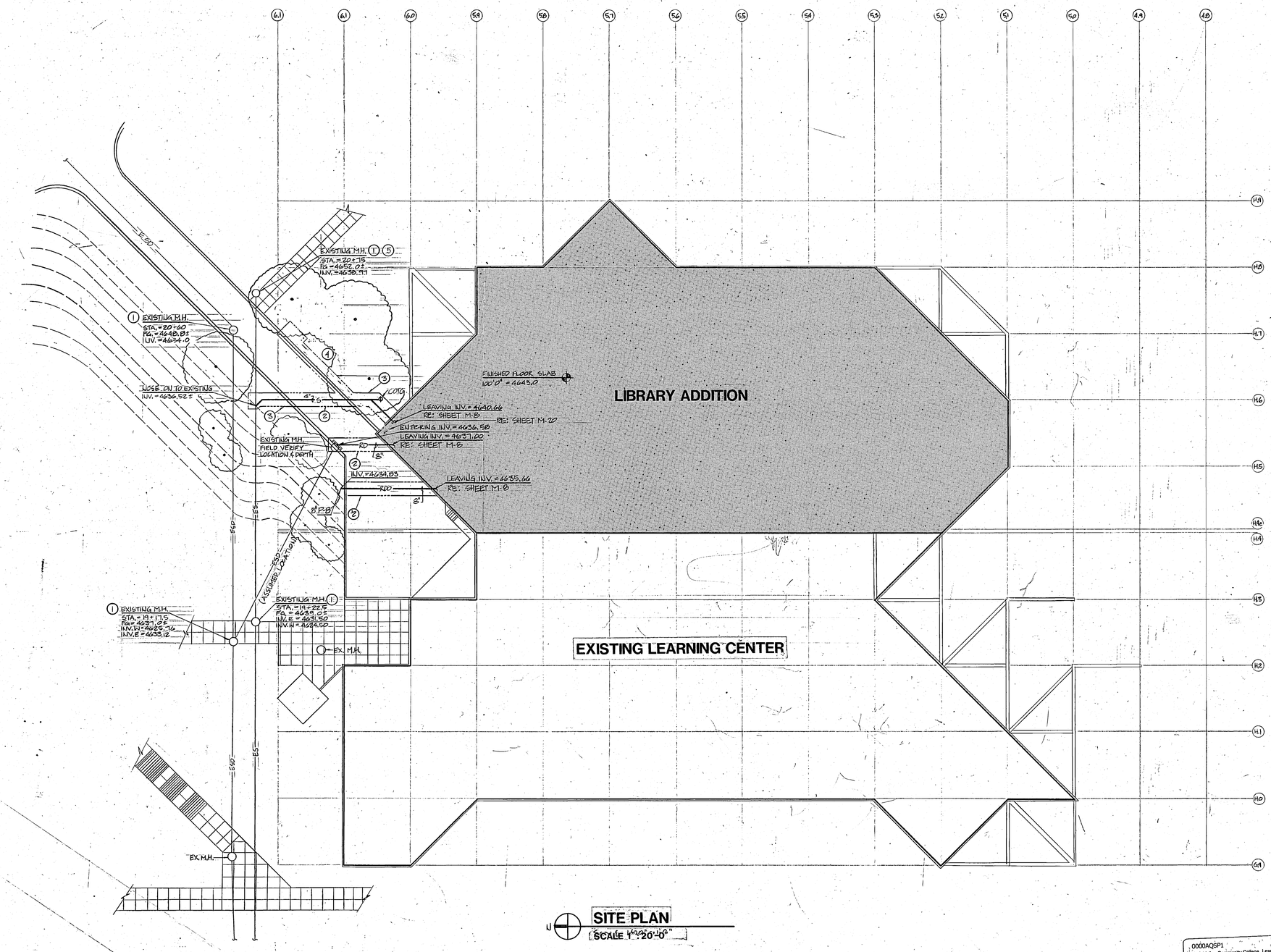

SITE PLAN
SCALE 1" = 20'-0"

KEYED NOTES

1. INVERTS TAKEN FROM DRAWING #M 76-54, SHEET PP-2, OF PHASE II NORTH CAMPUS SANITARY SEWER-STORM SEWER, DATED 6-30-76.
2. NEAT LINE CUT ASPHALT REPAIR WHEN FINISHED WITH MIN OF 6" OF SUB BASE AND 3" ASPHALT OR GREATER TO MATCH EXISTING.
3. REPAIR SOD, CONCRETE, AND ALL OTHER SURFACE FEATURES TO PREVIOUS STATE BEFORE TRENCHING.
4. SEE ARCHITECTURAL PLANS FOR EXACT LOCATION OF CONDENSER UNIT.
5. ADJUST MAN HOLE COVER TO FINISH GRADE.

AS BUILTS

0000AQSP1
Utah Valley Community College, Learning Resource Center
RV:90-014
Site Plan - 7243

REGISTERED PROFESSIONAL ENGINEER
No. 154254
JOSEPH A. PETERSON
State of Utah

UTAH VALLEY COMMUNITY COLLEGE LEARNING RESOURCE CENTER/LIBRARY ADDITION

STRUCTURAL ENGINEER	Bushnell, Mc and Associates	
MECHANICAL ENGINEER	Vanboerum and Frank	
ELECTRICAL ENGINEER	Bechtner, Nelson and Associates	
LANDSCAPE ARCHITECT	MGB and Associates	DRAWN BY:
INTERIOR DESIGNER	Don Harward	CHECKED BY:

Scott, Louie and Browning
architects/engineers/planners
1165 North University Ave. Provo, Utah 84601

Utah Valley Community College
Learning Resource Center/Library Addition
Orem, Utah - DFCM Project No. RV-90-014

SP-1
Feb. 18, 1991

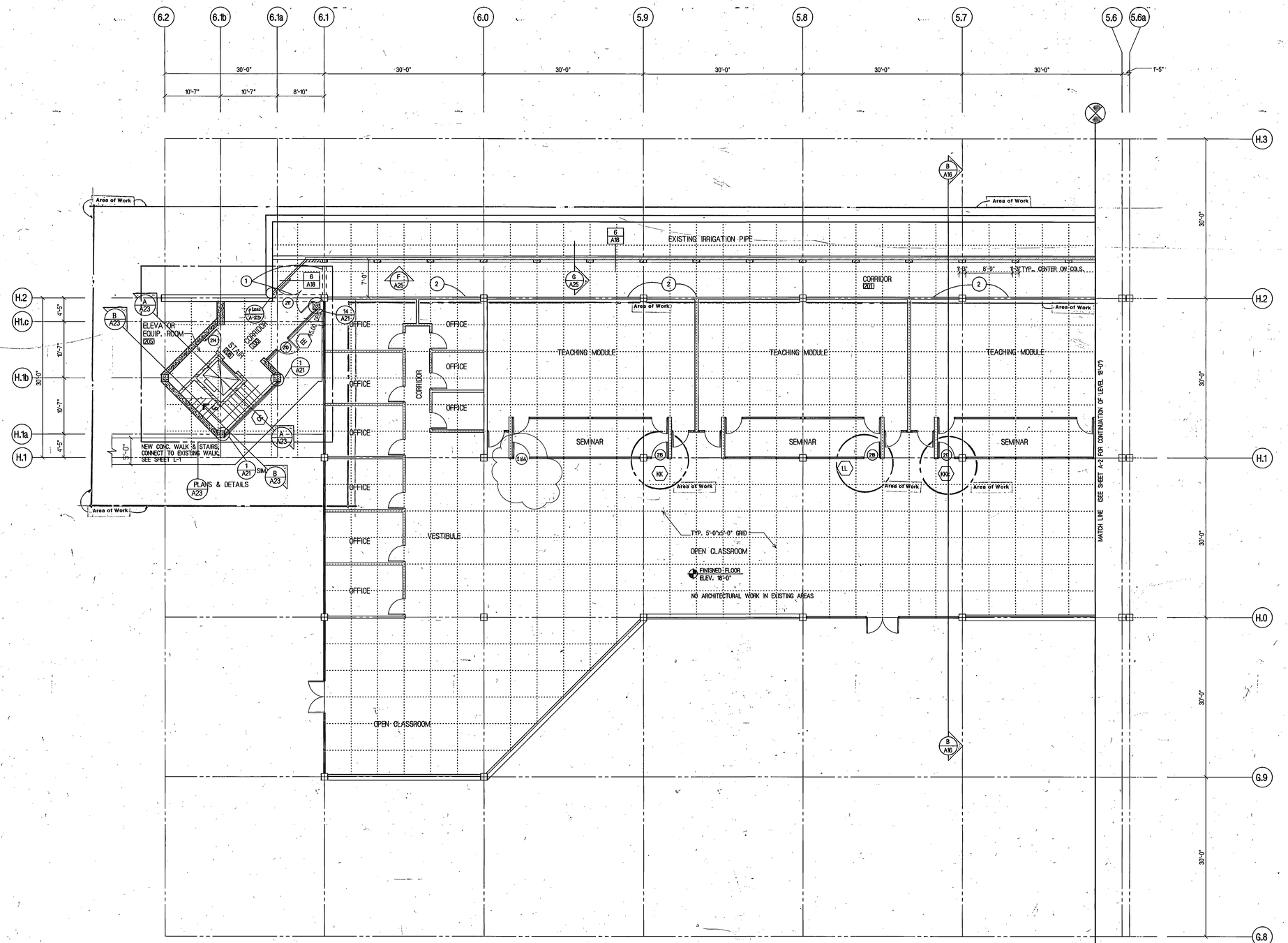

NORTH

LEVEL TWO FLOOR PLAN 18

SCALE: 1/8" = 1'-0"

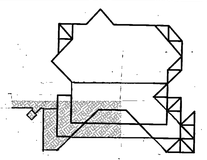

KEY PLAN

GENERAL NOTES

A. ALL DIMENSIONS ARE TO CENTERLINE OF STUD UNLESS NOTED OTERWISE.
B. ALL WALLS ARE TO CENTERLINE OF WINDOW MULLIONS.
C. CENTERLINE OF WALL ON CENTERLINE OF COLUMN.
D. ROOMS WITHOUT ROOM NUMBERS RECEIVE NO WORK UNDER THIS CONTRACT.
E. CARPET AND CARPET PATCHING N.I.C.
F. WHERE EXISTING CARPET REMAINS AND NEW PARTITIONS ARE ADDED, BUILD NEW PARTITIONS ON TOP OF CARPET.
G. REUSE INTERIOR GLASS WHERE POSSIBLE
H. SEE INTERIOR DESIGN DRWINGS. FOR NEW CARPET LOCATION.

CODED NOTES

1. SAW CUT AND REMOVE EXISTING CONCRETE, SEE STRUCTURAL
2. FINISH, REPAIR AND PAINT EXISTING GYPSUM BOARD WALL

WALL KEY

EXISTING WALLS

NEW WALL CONSTRUCTION

WALLS TO BE REMOVED

0000AQA1
Utah Valley Community College; Learning Resource Center - RV:90-014
Floor Plan Level 2 North - 7208

MECHANICAL & ELECTRICAL WORK MAY OCCUR OUTSIDE DESIGNATED AREA SEE DRAWINGS FOR EXTENT

AS BUILTS

UTAH VALLEY COMMUNITY COLLEGE LEARNING RESOURCE CENTER/LIBRARY ADDITION

LEVEL 2

STRUCTURAL ENGINEER : Bsumek Mu and Associates
MECHANICAL ENGINEER : VanBoerum and Frank
ELECTRICAL ENGINEER : Becherer Nielson and Associates
LANDSCAPE ARCHITECT : MGB and Associates
INTERIOR DESIGNER : Don Harward

DRAWN BY: AN + KRP
CHECKED BY: KRP

STATE OF UTAH SCOTT, LOUIE & BROWNING P.E. 1148 ARCH. 330 ARCH. 432 Salt Lake City LICENSED ARCHITECTS & ENGINEERS

Scott, Louie and Browning
architects, engineers, planners
4766 Holladay Boulevard, Salt Lake City, Utah 84117

Utah Valley Community College
Learning Resource Center/Library Addition
Orem, Utah DFCM Project No. RV:90-014

A-1

Feb. 18, 1991

MONSEN ENGINEERING CO 106657

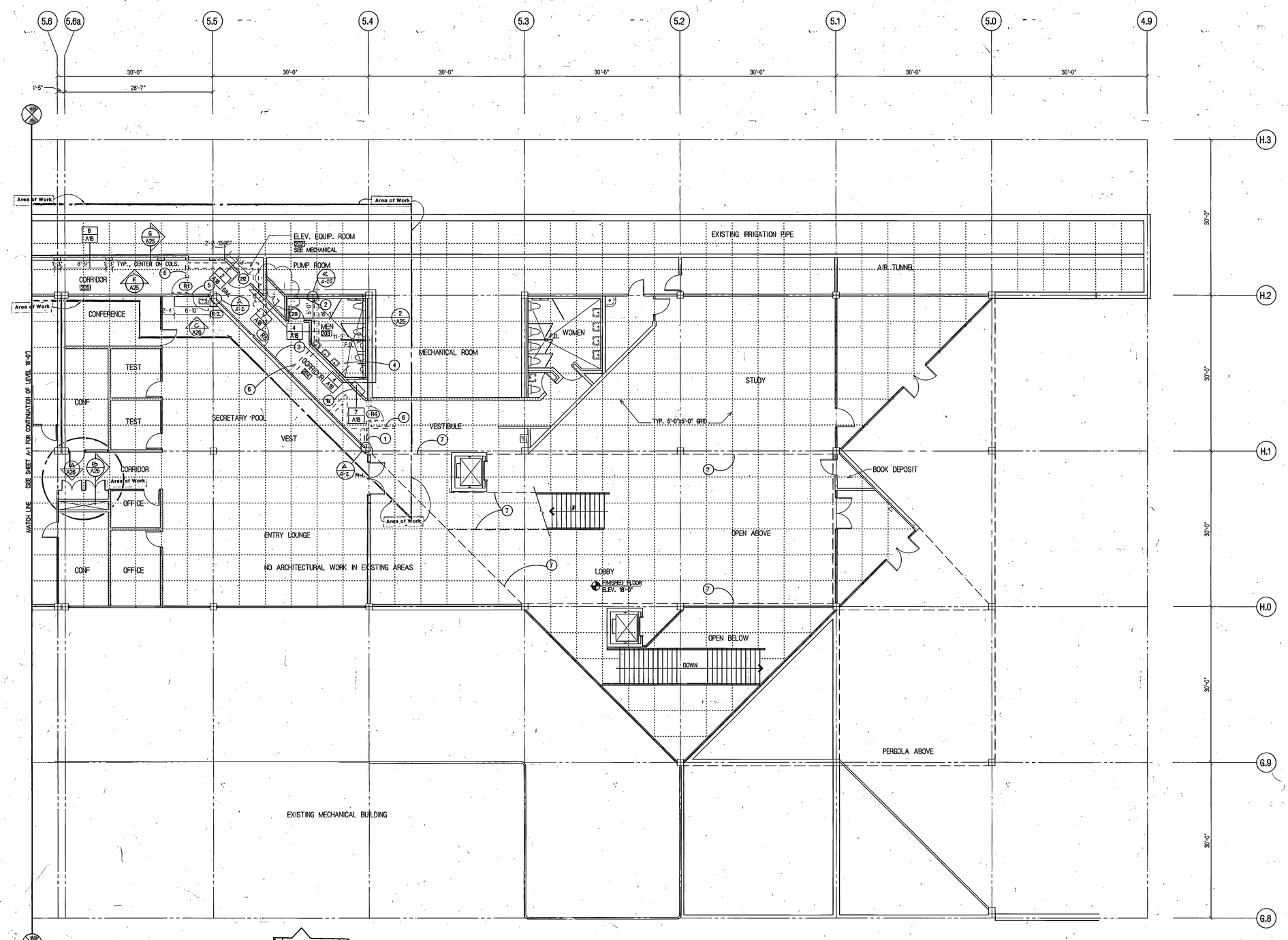

LEVEL TWO FLOOR PLAN 18
SCALE: 1/8" = 1'-0"

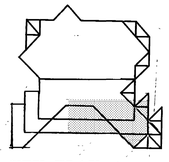

KEY PLAN

GENERAL NOTES

A. ALL DIMENSIONS ARE TO CENTERLINE OF STUD UNLESS NOTED OTERWISE.
B. ALL WALLS ARE TO CENTERLINE OF WINDOW MULLIONS.
C. CENTERLINE OF WALL ON CENTERLINE OF COLUMN.
D. ROOMS WITHOUT ROOM NUMBERS RECEIVE NO WORK UNDER THIS CONTRACT.
E. CARPET AND CARPET PATCHING N.I.C.
F. WHERE EXISTING CARPET REMAINS AND NEW PARTITIONS ARE ADDED, BUILD NEW PARTITIONS ON TOP OF CARPET.
G. REUSE INTERIOR GLASS WHERE POSSIBLE
H. SEE INTERIOR DESIGN DRWINGS. FOR NEW CARPET LOCATION.

CODED NOTES

1. RELOCATE EXISTING MAIL BOXES, SEE NOTE 1a FOR LOCATION.
2. FUR OUT MEN'S ROOM WALL AND THIN SET NEW CERAMIC TILE.
3. FUR OUT CORRIDOR WALL, FINISH WITH 5/8" GYP. BD.
4. MATCH EXISTING CERAMIC TILE FLOOR, SEE SHEET A-25 FOR ENLARGED PLANS.
5. REMOVE DOOR, PATCH AND PAINT WALL TO MATCH EXISTING WALL.
6. WALLS TO BE REMOVED.
7. AREA WITHIN OPEN TO ABOVE
8. 5/8" Gyp. Bd. on 3 5/8" Mtl. Std. patch into existing wall
9. Existing Column- clean all surfaces
10. centerline of existing column
11. 2x blocking to be painted black
12. New plastic laminated counter see Sheet A-26

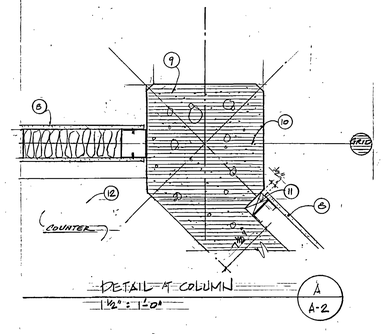

DETAIL AT COLUMN
1½" = 1'-0"
A
A-2

WALL KEY

EXISTING WALLS
NEW WALL CONSTRUCTION
WALLS TO BE REMOVED

0000AQA2
Utah Valley Community College Learning Resource Center - RV 90-014
Floor Plan Level 2 South - 7209

MECHANICAL & ELECTRICAL WORK MAY OCCUR OUTSIDE DESIGNATED AREA SEE DRAWINGS FOR EXTENT

AS BUILTS

UTAH VALLEY COMMUNITY COLLEGE LEARNING RESOURCE CENTER/LIBRARY ADDITION

LEVEL 2

STRUCTURAL ENGINEER : Bsumek Mu and Associates
MECHANICAL ENGINEER : VanBoerum and Frank
ELECTRICAL ENGINEER : Becherer Nielson and Associates
LANDSCAPE ARCHITECT : MGB and Associates
INTERIOR DESIGNER : Don Harward

DRAWN BY: AN + KRP
CHECKED BY: KRP

STATE OF UTAH
SCOTT, LOUIE & BROWNING
P.E. 1148
ARCH. 229
ARCH. 232
Salt Lake City
LICENSED ARCHITECTS & ENGINEERS

Scott, Louie and Browning
architects, engineers, planners
4766 Holladay Boulevard, Salt Lake City, Utah 84117

Utah Valley Community College
Learning Resource Center/Library Addition
Orem, Utah DFCM Project No. RV-90-014

A-2
Feb. 18, 1991

MONSEN ENGINEERING CO. 108657

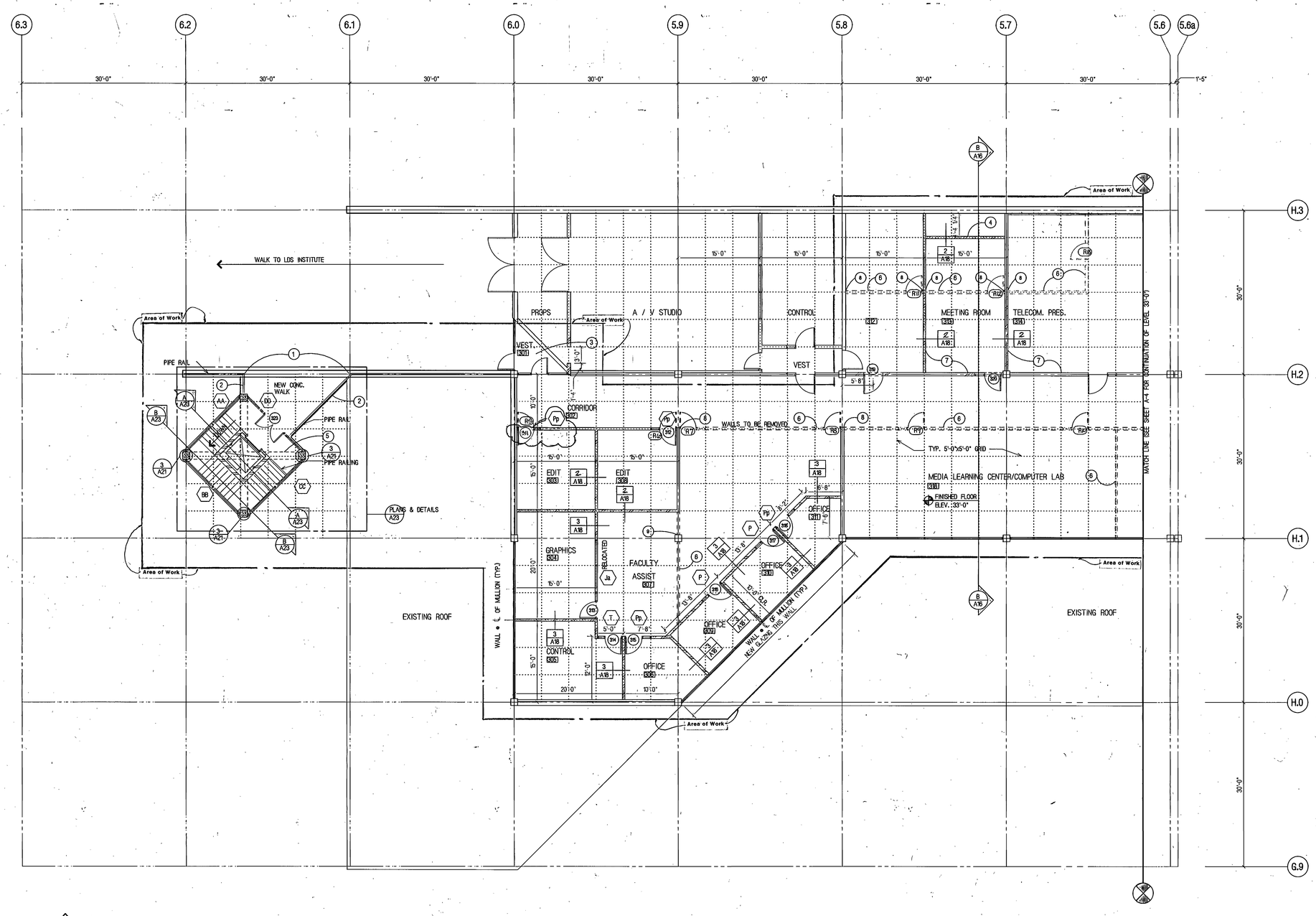

GENERAL NOTES

A. ALL DIMENSIONS ARE TO CENTERLINE OF STUD UNLESS NOTED OTERWISE.
B. ALL WALLS ARE TO CENTERLINE OF WINDOW MULLIONS.
C. CENTERLINE OF WALL ON CENTERLINE OF COLUMN.
D. ROOMS WITHOUT ROOM NUMBERS RECEIVE NO WORK UNDER THIS CONTRACT.
E. CARPET AND CARPET PATCHING N.I.C.
F. WHERE EXISTING CARPET REMAINS AND NEW PARTITIONS ARE ADDED, BUILD NEW PARTITIONS ON TOP OF CARPET.
G. REUSE INTERIOR GLASS WHERE POSSIBLE
H. SEE INTERIOR DESIGN DRWINGS. FOR NEW CARPET LOCATION.

CODED NOTES

1. CUT EXISTING PIPE RAILING, GRIND AND WELD NEW PIPE RAILING TO MATCH EXISTING.
2. PIPE RAILING (MATCH EXISTING, SEE SHEET A-23)
3. NEW TRAFFIC MATT, SEE FINISH SCHEDULE SHEET A-26
4. NEW STUD WALL W/PENETRATIONS, SEE ARCH.
5. CONC. BEAMS ABOVE, SEE STRUCTURAL
6. REMOVE PARTITION AND CLEAN SURFACES TO RECEIVE NEW FINISH.
7. ACOUSTICAL WALL PANELING (SEE INTERIOR DESIGN DRWINGS.)
8. PATCH, REPAIR AND PAINT EXISTING WALL, TYP.
9. CLEAN COLUMN OF ALL EXISTING WALL AREA REMOVED.

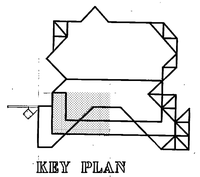

KEY PLAN

NORTH

LEVEL THREE FLOOR PLAN 55

SCALE: 1/8" = 1'-0"

WALL KEY

EXISTING WALLS
NEW WALL CONSTRUCTION
WALLS TO BE REMOVED

0000AQA3
Utah Valley Community College; Learning Resource Center - RV-90-014
Floor Plan Level 3 North - 7210

MECHANICAL & ELECTRICAL WORK MAY OCCUR OUTSIDE DESIGNATED AREA SEE DRAWINGS FOR EXTENT

AS BUILTS

UTAH VALLEY COMMUNITY COLLEGE LEARNING RESOURCE CENTER/LIBRARY ADDITION

LEVEL 3

STRUCTURAL ENGINEER	: Bsumek Mu and Associates
MECHANICAL ENGINEER	: VanBoerum and Frank
ELECTRICAL ENGINEER	: Becherer Nielson and Associates
LANDSCAPE ARCHITECT	: MGB and Associates
INTERIOR DESIGNER	: Don Harward

DRAWN BY: AJ + KAP
CHECKED BY: KRP

STATE OF UTAH SCOTT LOUIE SAKOWANNO P.E. 1145 ARCH. 255 ARCH. 255 LICENSED ARCHITECTS & ENGINEERS Salt Lake City

Scott, Louie and Browning
architects, engineers, planners
4766 Holladay Boulevard, Salt Lake City, Utah 84117

Utah Valley Community College
Learning Resource Center/Library Addition
Orem, Utah DFCM Project No. RV-90-014

A-3

Feb. 18, 1991

MONSEN ENGINEERING CO 100657

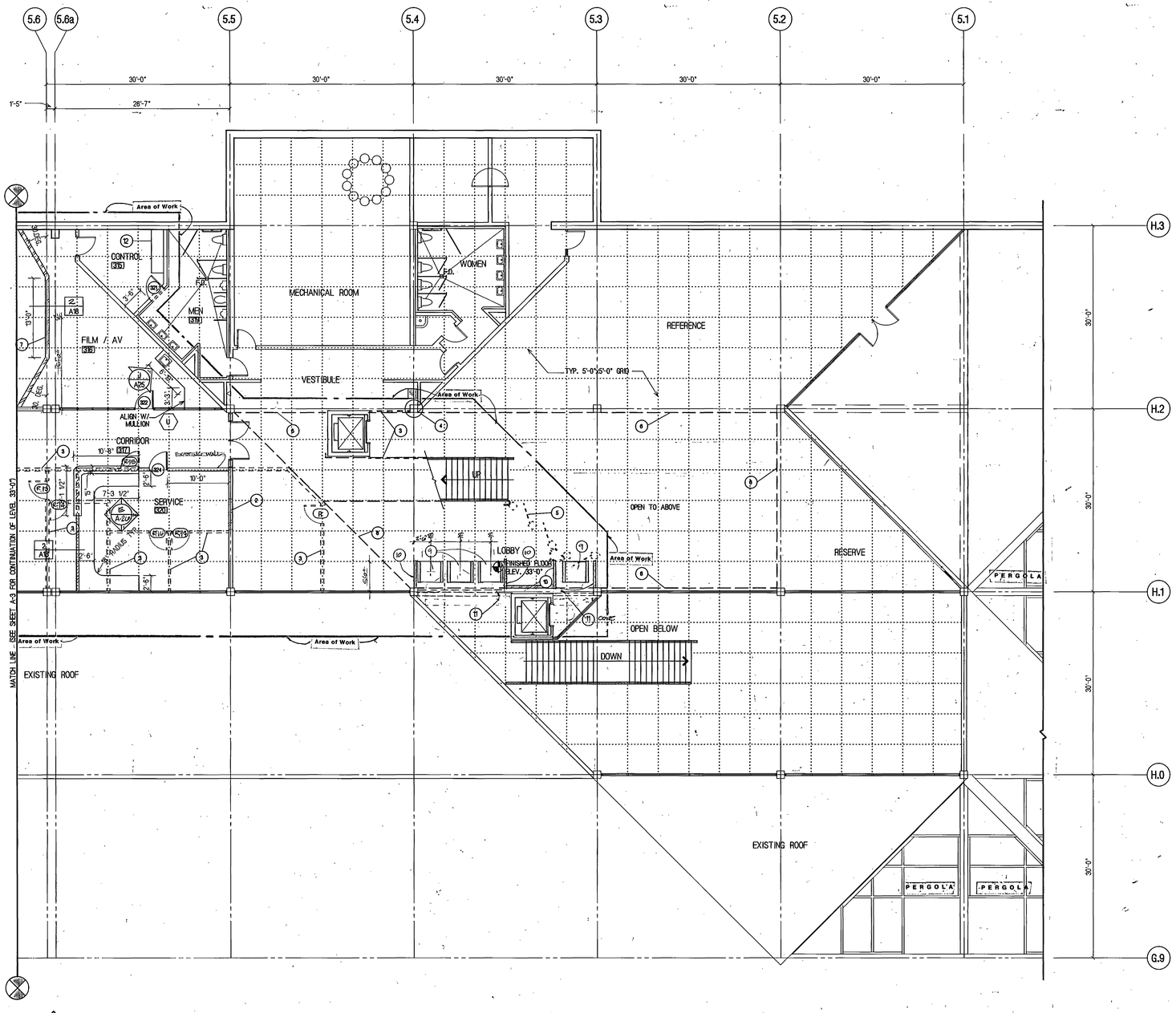

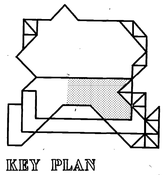

KEY PLAN

NORTH

LEVEL THREE FLOOR PLAN 33

SCALE: 1/8" = 1'-0"

GENERAL NOTES

A. ALL DIMENSIONS ARE TO CENTERLINE OF STUD UNLESS NOTED OTHERWISE.
B. ALL WALLS ARE TO CENTERLINE OF WINDOW MULLIONS.
C. CENTERLINE OF WALL ON CENTERLINE OF COLUMN.
D. ROOMS WITHOUT ROOM NUMBERS RECEIVE NO WORK UNDER THIS CONTRACT.
E. CARPET AND CARPET PATCHING N.I.C.
F. WHERE EXISTING CARPET REMAINS AND NEW PARTITIONS ARE ADDED, BUILD NEW PARTITIONS ON TOP OF CARPET.
G. REUSE INTERIOR GLASS WHERE POSSIBLE
H. SEE INTERIOR DESIGN DRWINGS. FOR NEW CARPET LOCATION.

MECHANICAL & ELECTRICAL WORK MAY OCCUR OUTSIDE DESIGNATED AREA SEE DRAWINGS FOR EXTENT

CODED NOTES

1. PATCH AND PAINT 5/8" GYP. BD. WALL-MATCH EXISTING
2. REMOVE DOOR, PATCH AND PAINT 5/8" GYP. BD. WALL-MATCH EXISTING
3. REMOVE PARTITION AND CLEAN SURFACES TO RECEIVE NEW FINISH.
4. PATCH AND PAINT AFTER GLASS WALL REMOVAL
5. REMOVE EXISTING SECURITY GATES
6. LINE OF FLOOR ABOVE.
7. ACOUSTICAL WALL PANELING, SEE INTERIOR DESIGN DRWINGS.
8. NEW STUD WALL WITH PENETRATIONS
9. NEW DETECTION SECURITY GATES, SEE SFECIFICATIONS
10. VENTWOOD WALLS W/SOLID FRAMING AROUND PERIMETER, SEE DETAIL
11. NEW ALUMINUM RETRACTALE ELECTRIC GATES
12. EXISTING CABINET TO REMAIN

WALL KEY

EXISTING WALLS

NEW WALL CONSTRUCTION

WALLS TO BE REMOVED

0000AQA4
Utah Valley Community College; Learning Resource Center - RV.90-014
Floor Plan Level 3 South - 7211

MECHANICAL & ELECTRICAL WORK MAY OCCUR OUTSIDE DESIGNATED AREA SEE DRAWINGS FOR EXTENT

AS BUILTS

UTAH VALLEY COMMUNITY COLLEGE LEARNING RESOURCE CENTER/LIBRARY ADDITION

LEVEL 3

STRUCTURAL ENGINEER : Bsumek Mu and Associates
MECHANICAL ENGINEER : VanBoerum and Frank
ELECTRICAL ENGINEER : Becherer Nielson and Associates
LANDSCAPE ARCHITECT : MGB and Associates
INTERIOR DESIGNER : Don Harward

DRAWN BY: AN + KRP
CHECKED BY: KRP

STATE OF UTAH
SCOTT LOUIE BROWNING
P.E. 1165
ARCH. 228
ARCH. 232
Salt Lake City
LICENSED ARCHITECTS & ENGINEERS

Utah Valley Community College
Learning Resource Center/Library Addition

Orem, Utah DFCM Project No. RV-90-014

A-4

Feb. 18, 1991

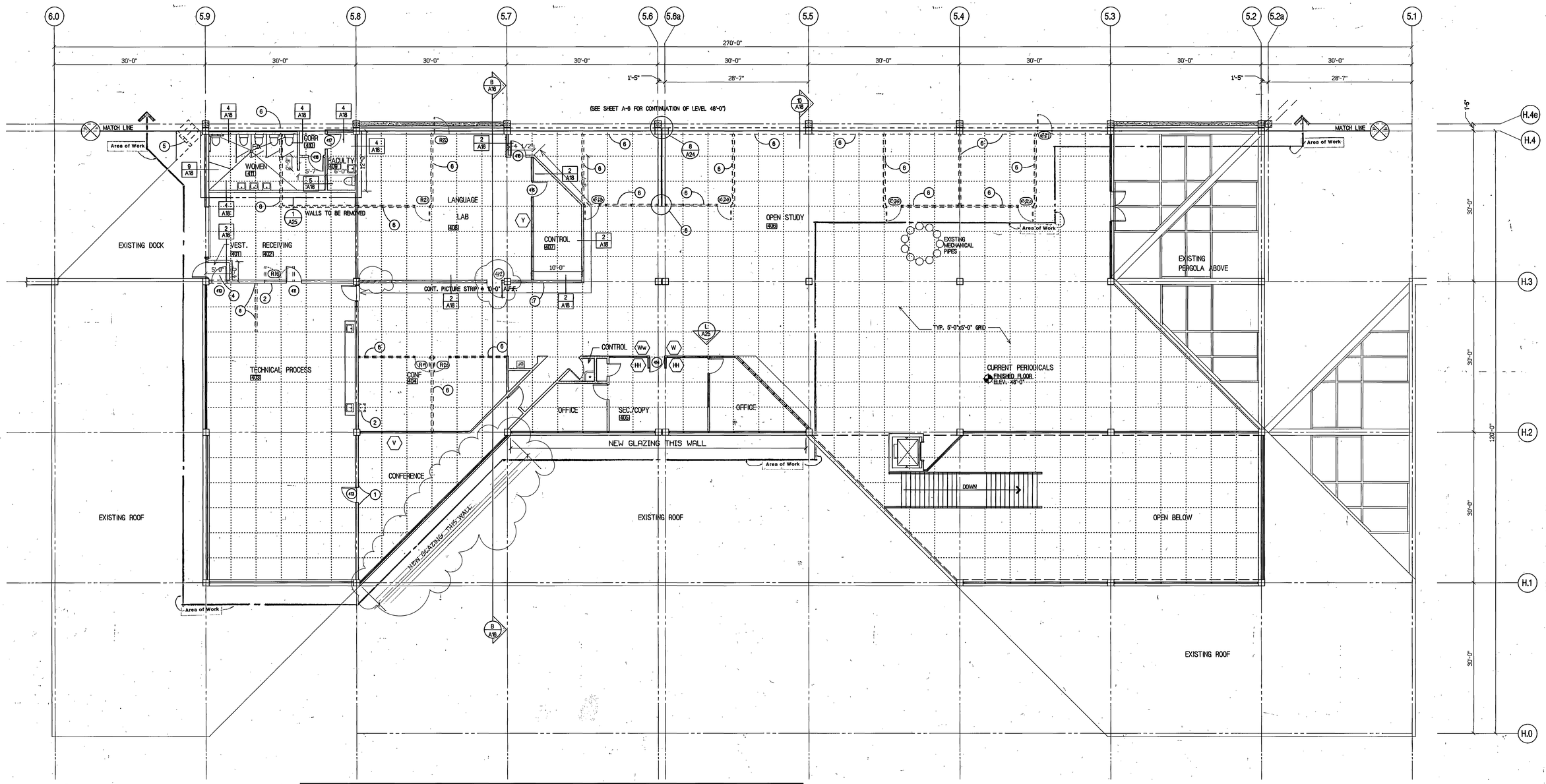

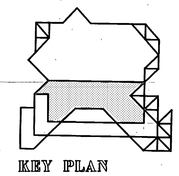

KEY PLAN

NORTH

LEVEL FOUR FLOOR PLAN 48

SCALE: 1/8" = 1'-0"

GENERAL NOTES

A. ALL DIMENSIONS ARE TO CENTERLINE OF STUD UNLESS NOTED OTHERWISE.
B. ALL WALLS ARE TO CENTERLINE OF WINDOW MULLIONS.
C. CENTERLINE OF WALL ON CENTERLINE OF COLUMN.
D. ROOMS WITHOUT ROOM NUMBERS RECEIVE NO WORK UNDER THIS CONTRACT.
E. CARPET AND CARPET PATCHING N.I.C.
F. WHERE EXISTING CARPET REMAINS AND NEW PARTITIONS ARE ADDED, BUILD NEW PARTITIONS ON TOP OF CARPET.
G. REUSE INTERIOR GLASS WHERE POSSIBLE
H. SEE INTERIOR DESIGN DRWINGS FOR NEW CARPET LOCATION.

CODED NOTES

1. PATCH AND PAINT 5/8" GYP. BD. WALL-MATCH EXISTING
2. REMOVE FIXTURE TO BE RELOCATED. PATCH EXISTING WALL AND PAINT TO MATCH
3. NEW LOW PROFILE WALL. SEE SHEET A-25
4. NEW TRAFFIC MATT. SEE FINISH SCHEDULE SHEET A-26
5. REMOVE EXISTING LOADING DOCK STAIRS.NEW CONC. PLATFORM AND STAIRS
6. REMOVE PARTITION AND CLEAN SURFACES TO RECEIVE NEW FINISH.
7. CONT. PICTURE STRIP 10'-0" A.F.F.

WALL KEY

EXISTING WALLS
NEW WALL CONSTRUCTION
WALLS TO BE REMOVED

0000AQA5
Utah Valley Community College; Learning Resource Center - RV.90-014
Floor Plan Level 4 West - 7212

AS BUILTS

UTAH VALLEY COMMUNITY COLLEGE LEARNING RESOURCE CENTER/LIBRARY ADDITION

LEVEL 4

STRUCTURAL ENGINEER : Bsumek Mu and Associates
MECHANICAL ENGINEER : VanBoerum and Frank
ELECTRICAL ENGINEER : Becherer Nielson and Associates
LANDSCAPE ARCHITECT : MGB and Associates
INTERIOR DESIGNER : Don Harward

DRAWN BY: AU + KRP
CHECKED BY: KRP

STATE OF UTAH
SCOTT, LOUIE & OWNINGS
P.E. 1148
ARCH. 558
ARCH. 456
Salt Lake City
LICENSED ARCHITECTS & ENGINEERS

Scott, Louie and Browning
architects, engineers, planners
4766 Holladay Boulevard, Salt Lake City, Utah 84117

Utah Valley Community College
Learning Resource Center/Library Addition
Orem, Utah DFCM Project No. RV-90-014

A-5

Feb. 18, 1991

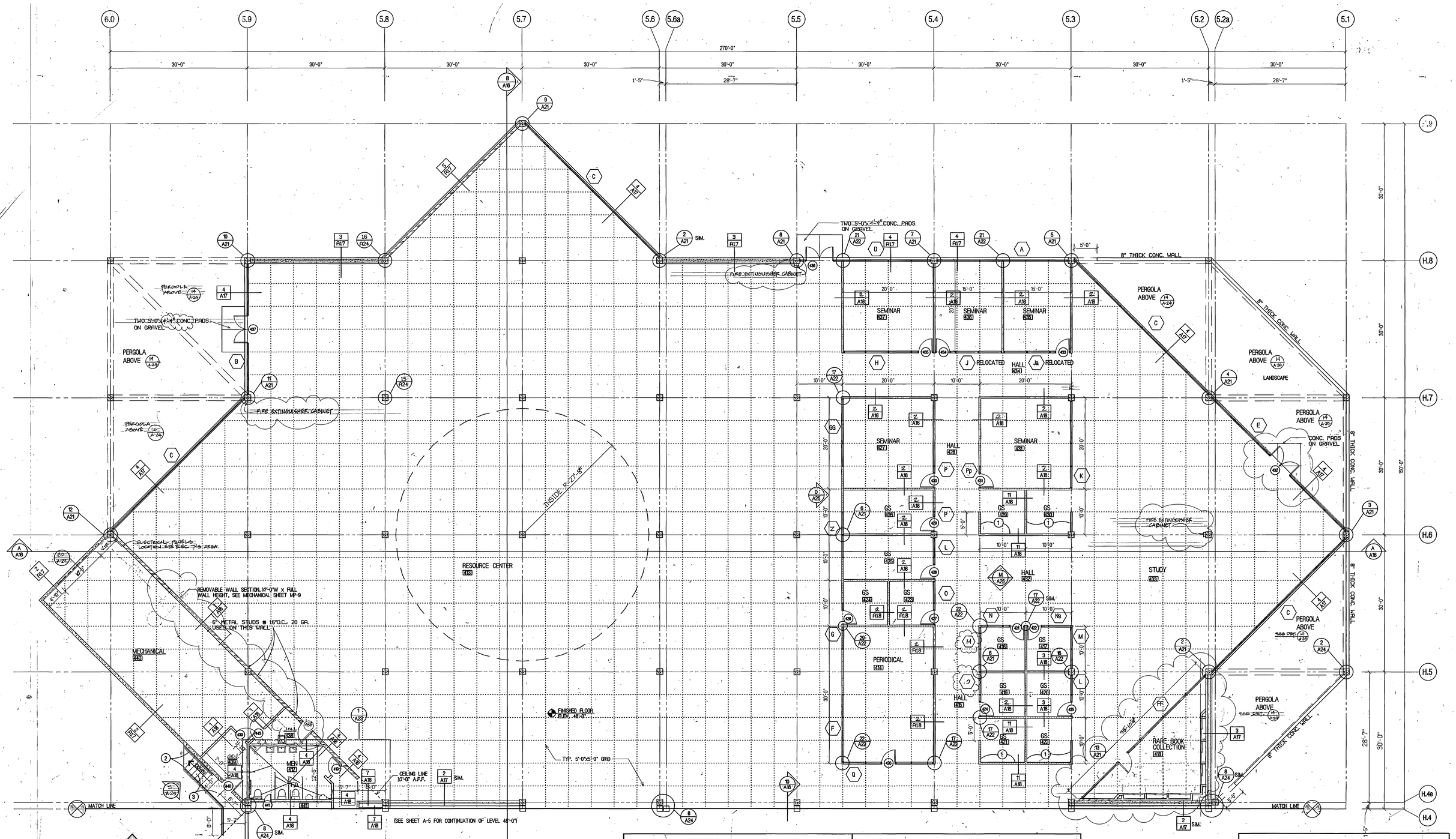

LEVEL FOUR FLOOR PLAN 48
SCALE: 1/8" = 1'-0"

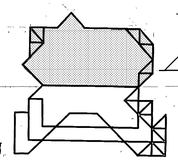

KEY PLAN

GENERAL NOTES

A. ALL DIMENSIONS ARE TO CENTERLINE OF STUD UNLESS NOTED OTHERWISE.
B. ALL WALLS ARE TO CENTERLINE OF WINDOW MULLIONS.
C. CENTERLINE OF WALL ON CENTERLINE OF COLUMN.
D. ROOMS WITHOUT ROOM NUMBERS RECEIVE NO WORK UNDER THIS CONTRACT.
E. CARPET AND CARPET PATCHING N.I.C.
F. WHERE EXISTING CARPET REMAINS AND NEW PARTITIONS ARE ADDED, BUILD NEW PARTITIONS ON TOP OF CARPET.
G. REUSE INTERIOR GLASS WHERE POSSIBLE
H. SEE INTERIOR DESIGN DRWINGS FOR NEW CARPET LOCATION.

CODED NOTES

1. NEW LOW PROFILE WALL PARTITION, SEE SHEET A-26
2. NEW PIPE HAND RAILING
3. NEW CONC. PLATFORM & STAIRWAY, SEE DETAIL

0000AQA6
Utah Valley Community College; Learning Resource Center - RV:90-014
Floor Plan Level 4 East - 7213

WALL KEY

EXISTING WALLS
NEW WALL CONSTRUCTION
WALLS TO BE REMOVED

AS BUILTS

UTAH VALLEY COMMUNITY COLLEGE LEARNING RESOURCE CENTER/LIBRARY ADDITION

LEVEL 4

STRUCTURAL ENGINEER : Bsumek Mu and Associates
MECHANICAL ENGINEER : VanBoerum and Frank
ELECTRICAL ENGINEER : Becherer Nielson and Associates
LANDSCAPE ARCHITECT : MGB and Associates
INTERIOR DESIGNER : Don Harward

DRAWN BY: AN + KRP
CHECKED BY: KRP

STATE OF UTAH
SCOTT, LOUIE & BROWNING
P.E. 1148
ARCH. 239
ARCH. 432
Salt Lake City
LICENSED ARCHITECTS & ENGINEERS

Scott, Louie and Browning
architects, engineers, planners
4766 Holladay Boulevard, Salt Lake City, Utah 84117

Utah Valley Community College
Learning Resource Center/Library Addition
Orem, Utah DFCM Project No. RV:90-014

A-6
Feb. 18, 1991

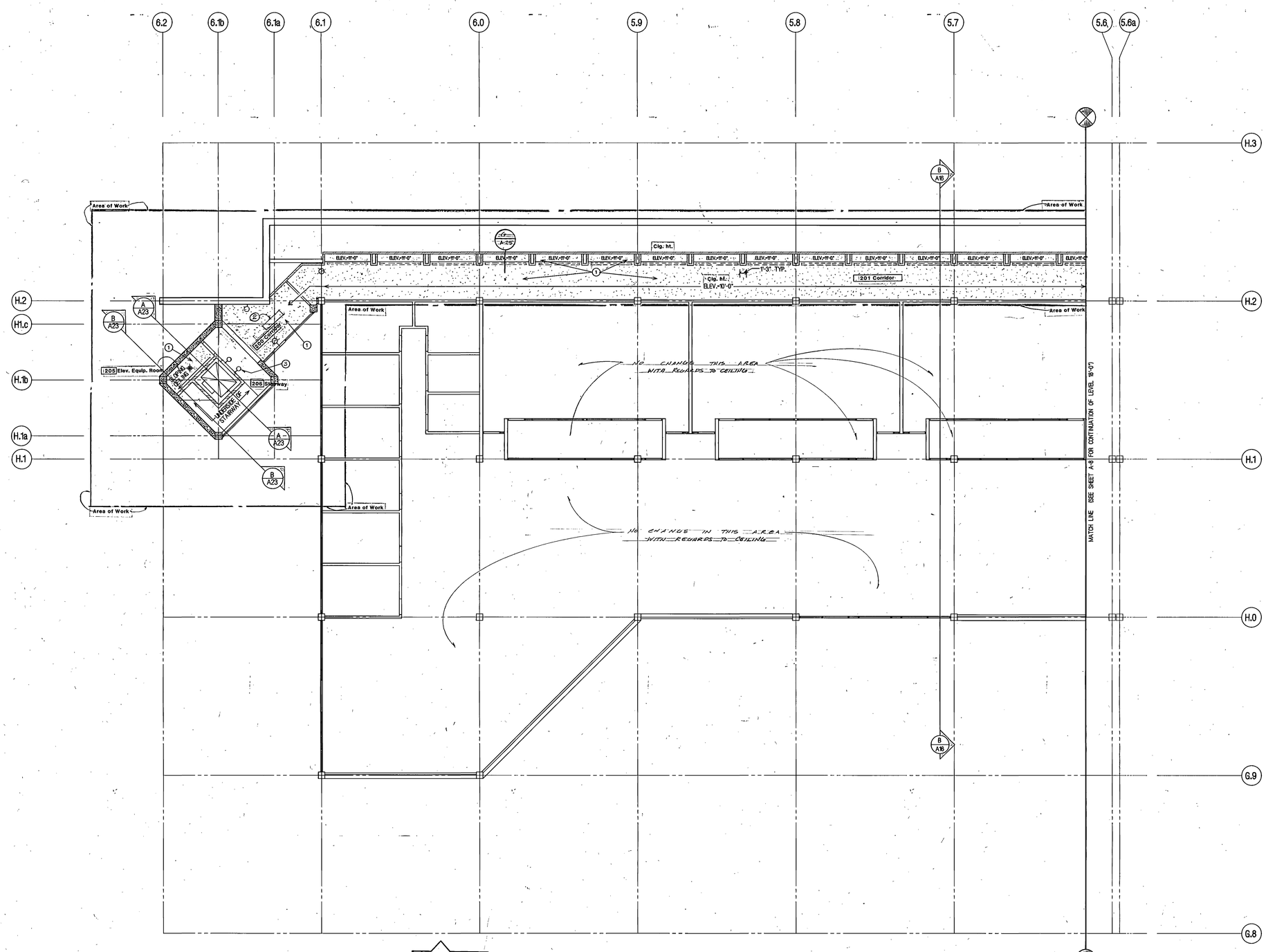

NORTH

LEVEL TWO CEILING PLAN 18

SCALE: 1/8" = 1'-0"

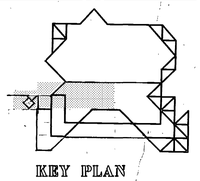

KEY PLAN

CODED NOTES

1. 5/8" GYPSUM BOARD (PAINTED) TYPICAL
2. CEILING MOUNTED FLUORESCENT FIXTURE
3. WALL MOUNTED LIGHT FIXTURE

CEILING LEGEND

- NEW SUSPENDED FIXTURE
- EXISTING LIGHT FIXTURE TO REMAIN
- WALL MOUNTED FLUORESCENT LIGHT FIXTURE
- WALL MOUNTED INCANDESCENT LIGHT FIXTURE
- EXIT SIGN
- CEILING MOUNTED INCANDESCENT LIGHT FIXTURE
- CEILING MOUNTED TRACK LIGHTS
- MECHANICAL DUCT
- 2'-6"x5'-0" ACOUSTICAL TILE
- EXISTING VALANCE TO REMAIN
- VALANCE TO BE REMOVED
- NEW WOOD VALANCE

0000AQA7
Utah Valley Community College; Learning Resource Center - RV:90-014
Refected Ceiling Level 2 North - 7214

MECHANICAL & ELECTRICAL WORK MAY OCCUR OUTSIDE DESIGNATED AREA SEE DRAWINGS FOR EXTENT

AS BUILTS

UTAH VALLEY COMMUNITY COLLEGE LEARNING RESOURCE CENTER/LIBRARY ADDITION

LEVEL 2

STRUCTURAL ENGINEER	: Bsumek Mu and Associates
MECHANICAL ENGINEER	: VanBoerum and Frank
ELECTRICAL ENGINEER	: Becherer Nielson and Associates
LANDSCAPE ARCHITECT	: MGB and Associates
INTERIOR DESIGNER	: Don Harward

DRAWN BY: AJJ + KRP
CHECKED BY: KRP

STATE OF UTAH — SCOTT LOUIE & BROWNING — P.E. 1155 ARCH. 255 ARCH. 255 — Salt Lake City — LICENSED ARCHITECTS & ENGINEERS

Scott, Louie and Browning
architects, engineers, planners
4766 Holladay Boulevard, Salt Lake City, Utah 84117

Utah Valley Community College
Learning Resource Center/Library Addition
Orem, Utah DFCM Project No. RV-90-014

A-7
Feb. 18, 1991

MONSEN ENGINEERING CO 108657

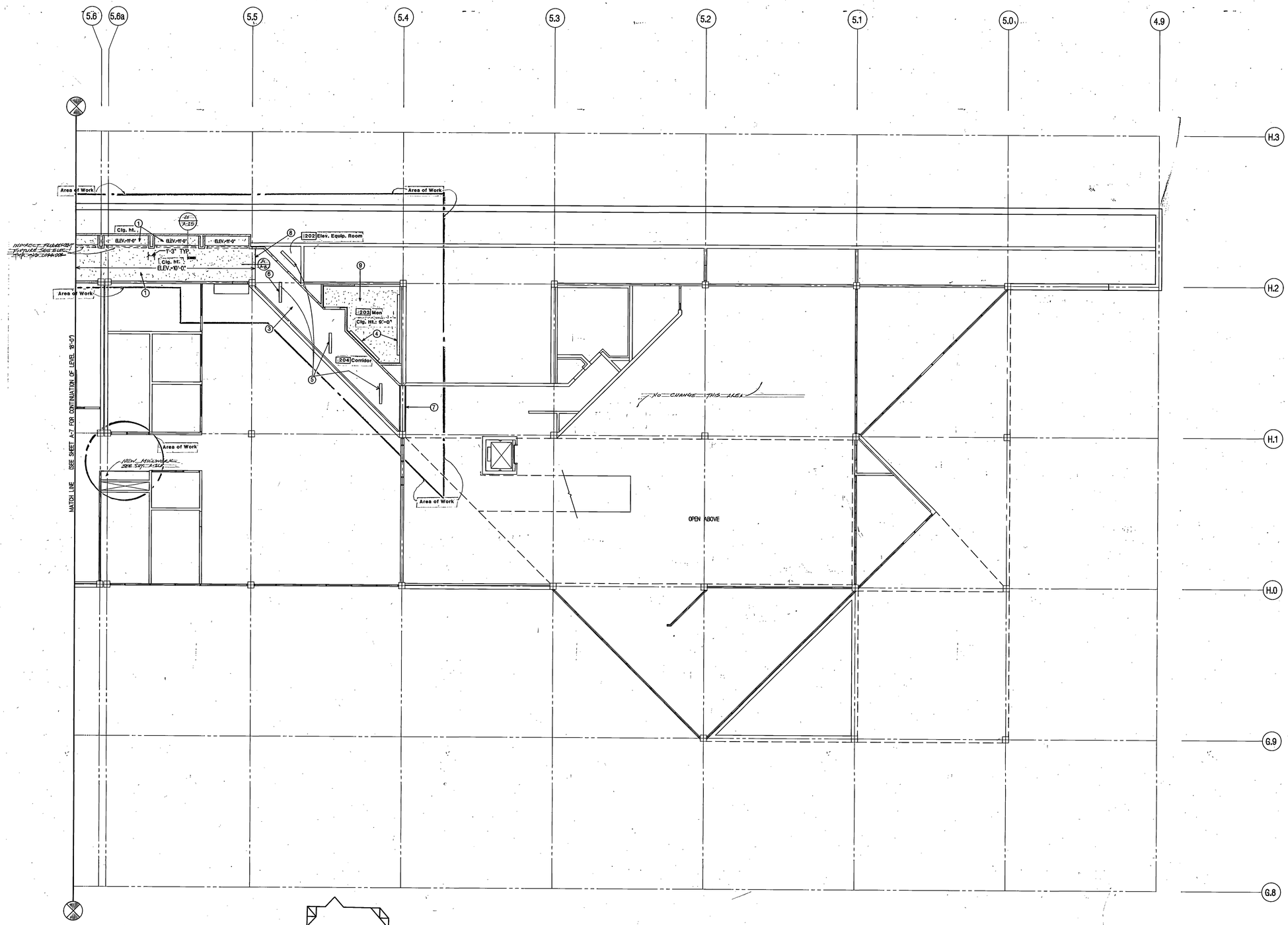

LEVEL TWO CEILING PLAN 18

SCALE: 1/8" = 1'-0"

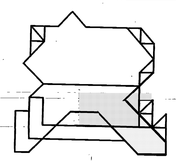

KEY PLAN

CODED NOTES

1. 5/8" GYPSUM BOARD (PAINTED)
2. WALL MOUNTED FLUORESCENT FIXTURE
3. OPEN CEILING TO STRUCTURE
4. CEILING MOUNTED FLUORESCENT LIGHT FIXTURES
5. SUSPENDED FLUORESCENT STRIP LIGHT FIXTURES
6. EMERGENCY LIGHTING - SUSPENDED LIGHT FIXTURE
7. ADDITIONAL WOOD VALANCE
8. FIR - VALANCE (TO MATCH EXISTING) DET. A/A-8
9. MATCH EXISTING CEILING W/5/8" GYPSUM BOARD, PATCH AND PAINT
10. 3 5/8" Mtl. Stud bracing as required
11. Suspended ceiling system w/ 5/8" Gyp. Bd. Painted
12. Existing concrete structure

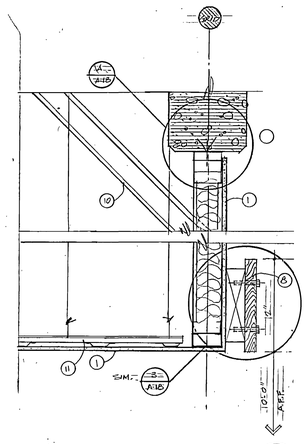

DETAIL @ CEILING EDGE
1½" = 1'-0"

CEILING LEGEND

- NEW SUSPENDED FIXTURE
- EXISTING LIGHT FIXTURE TO REMAIN
- WALL MOUNTED FLUORESCENT LIGHT FIXTURE
- WALL MOUNTED INCANDESCENT LIGHT FIXTURE
- EXIT SIGN
- CEILING MOUNTED INCANDESCENT LIGHT FIXTURE
- CEILING MOUNTED TRACK LIGHTS
- MECHANICAL DUCT
- 2'-6"x5'-0" ACOUSTICAL TILE
- EXISTING VALANCE TO REMAIN
- VALANCE TO BE REMOVED
- NEW WOOD VALANCE

MECHANICAL & ELECTRICAL WORK MAY OCCUR OUTSIDE DESIGNATED AREA SEE DRAWINGS FOR EXTENT

0000AQA8
Utah Valley Community College; Learning Resource Center - RV:90-014
Reflected Ceiling Level 2 South - 7215

AS BUILTS

UTAH VALLEY COMMUNITY COLLEGE LEARNING RESOURCE CENTER/LIBRARY ADDITION

LEVEL 2

STRUCTURAL ENGINEER	: Bsumek Mu and Associates
MECHANICAL ENGINEER	: VanBoerum and Frank
ELECTRICAL ENGINEER	: Becherer Nielson and Associates
LANDSCAPE ARCHITECT	: MGB and Associates
INTERIOR DESIGNER	: Don Harward

DRAWN BY: AN + KRP
CHECKED BY: KRP

STATE OF UTAH · SCOTT, LOUIE & BROWNING · P.E. 1148 · ARCH. 259 · ARCH. 632 · Salt Lake City · LICENSED ARCHITECTS & ENGINEERS

Scott, Louie and Browning
architects, engineers, planners
4766 Holladay Boulevard, Salt Lake City, Utah 84117

Utah Valley Community College
Learning Resource Center/Library Addition
Orem, Utah DFCM Project No. RV:90-014

A-8
Feb. 18, 1991

MONSEN ENGINEERING CO 108657

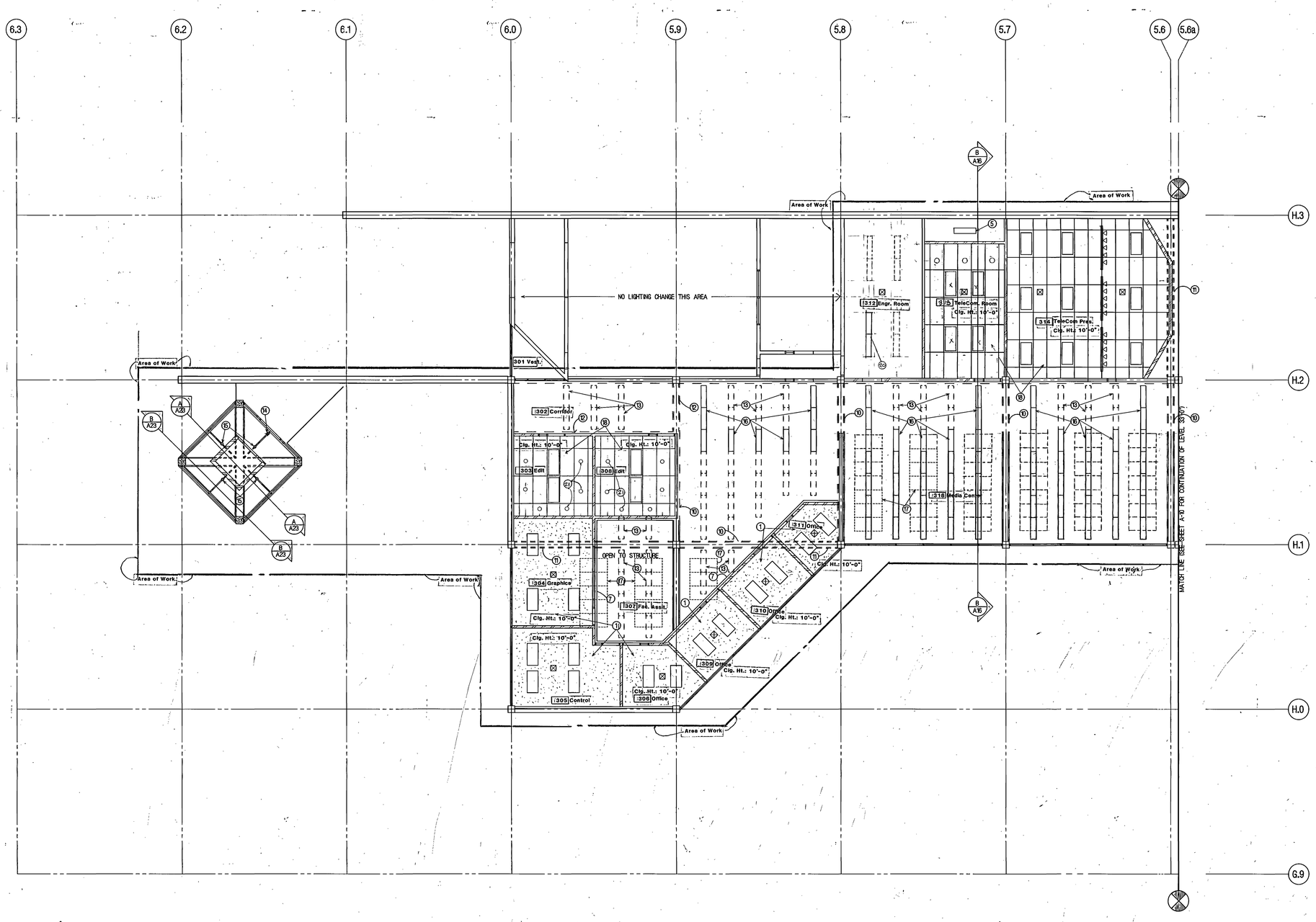

CODED NOTES

1. 5/8" GYPSUM BOARD (PAINTED)
2. CEILING MOUNTED FLUORESCENT FIXTURE
3. OPEN CEILING TO STRUCTURE
4. CEILING MOUNTED FLUORESCENT LIGHT FIXTURES
5. SUSPENDED FLUORESCENT STRIP LIGHT FIXTURES
6. EMERGENCY LIGHTING - SUSPENDED LIGHT FIXTURE
7. ADDITIONAL WOOD VALANCE, SEE SHEET A-18
8. FTR[illegible]D VALANCE
9. MATCH EXISTING CEILING W/5/8" GYPSUM BOARD, PATCH AND PAINT
10. EXISTING VALANCE TO BE MODIFIED.
11. REMOVE EXISTING WOOD VALANCE.
12. EXISTING WOOD VALANCE. (TO REMAIN)
13. EXISTING SUSPENDED LIGHT FIXTURES.
14. EXIT SIGN (SEE ELECT.)
15. WALL MOUNTED INCANDESCENT FIXTURE
16. NEW SUSPENDED LIGHT FIXTURES, TIED INTO & TO MATCH EXISTING.
17. NEW 2'-6"x5'-0" ACOUSTICAL PANELS MOUNTED TO STRUCTURE, MATCH EXISTING
18. 30"x60" LAY-IN TILE
19. 2'x4' SUSPENDED FLUORESCENT LIGHT FIXTURE
20. CEILING MOUNTED FLUORESCENT (TO MATCH EXISTING)
21. RECESSED INCANDESCENT FIXTURE

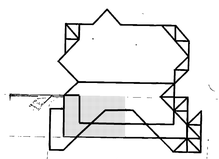

KEY PLAN

NORTH

LEVEL THREE CEILING PLAN 33

SCALE: 1/8" = 1'-0"

CEILING LEGEND

- NEW SUSPENDED FIXTURE
- EXISTING LIGHT FIXTURE TO REMAIN
- WALL MOUNTED FLUORESCENT LIGHT FIXTURE
- WALL MOUNTED INCANDESCENT LIGHT FIXTURE
- EXIT SIGN
- CEILING MOUNTED INCANDESCENT LIGHT FIXTURE
- CEILING MOUNTED TRACK LIGHTS
- MECHANICAL DUCT
- 2'-6"x5'-0" ACOUSTICAL TILE
- EXISTING VALANCE TO REMAIN
- VALANCE TO BE REMOVED
- NEW WOOD VALANCE

0000AQA9
Utah Valley Community College; Learning Resource Center - RV:90-014
Reflected Ceiling Level 3 North - 7216

MECHANICAL & ELECTRICAL WORK MAY OCCUR OUTSIDE DESIGNATED AREA SEE DRAWINGS FOR EXTENT

AS BUILTS

UTAH VALLEY COMMUNITY COLLEGE LEARNING RESOURCE CENTER/LIBRARY ADDITION

LEVEL 3

STRUCTURAL ENGINEER : Bsumek Mu and Associates
MECHANICAL ENGINEER : VanBoerum and Frank
ELECTRICAL ENGINEER : Becherer Nielson and Associates
LANDSCAPE ARCHITECT : MGB and Associates
INTERIOR DESIGNER : Don Harward

DRAWN BY: AN + KRP
CHECKED BY: KRP

STATE OF UTAH
SCOTT, LOUIE & BROWNING
F.E. 1148
ARCH. 229
ARCH. 432
Salt Lake City
LICENSED ARCHITECTS & ENGINEERS

Scott, Louie and Browning
architects, engineers, planners
4766 Holladay Boulevard, Salt Lake City, Utah 84117

Utah Valley Community College
Learning Resource Center/Library Addition
Orem, Utah DFCM Project No. RV:90-014

A-9
Feb. 18, 1991

MONSEN ENGINEERING CO. 106657

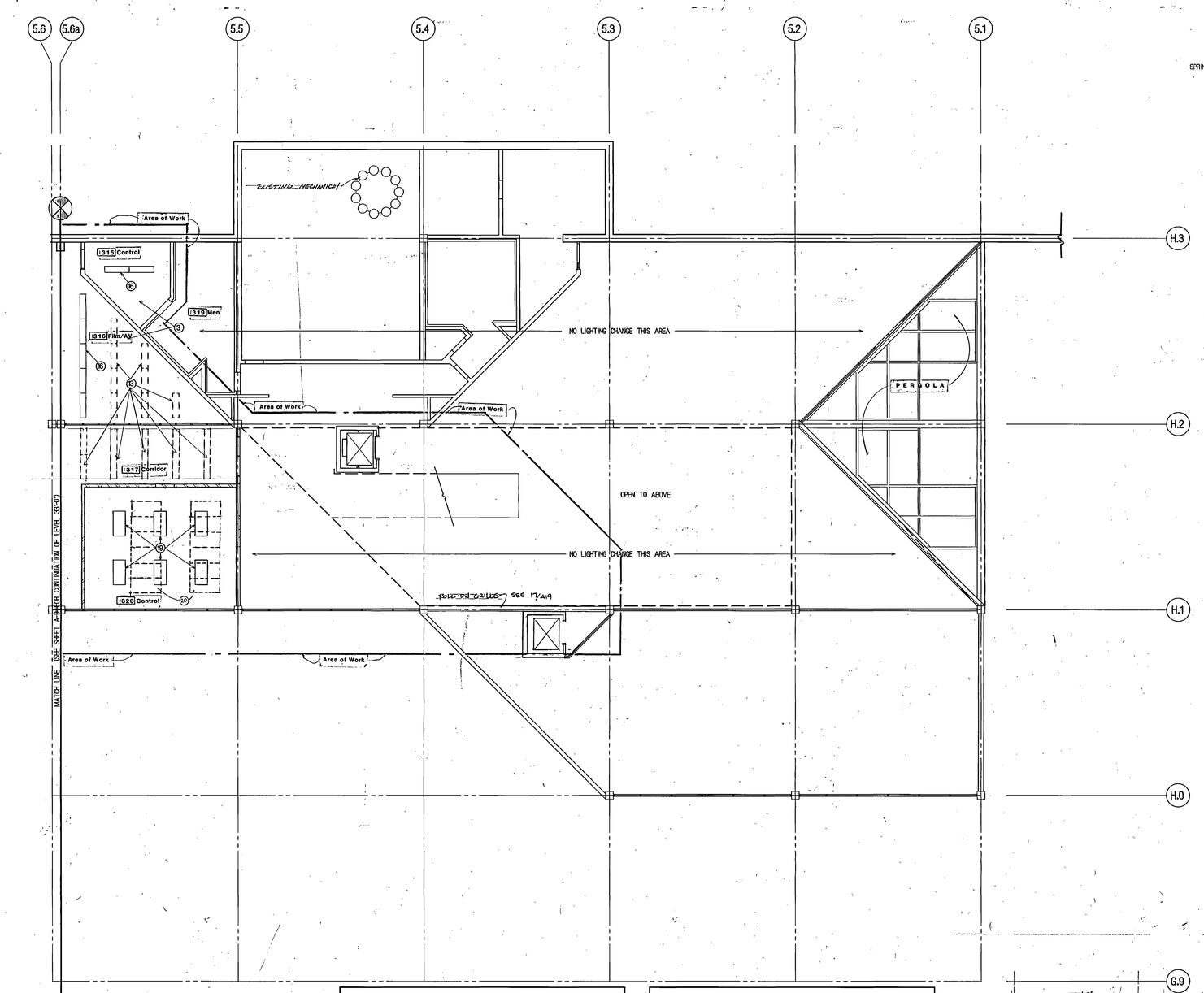

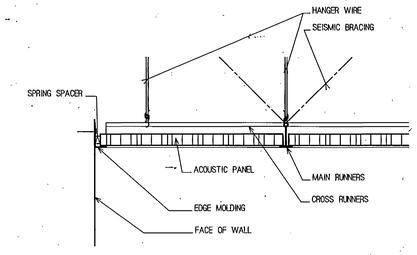

ACOUSTIC PANEL CEILING 6/A10
3" : 1'-0"

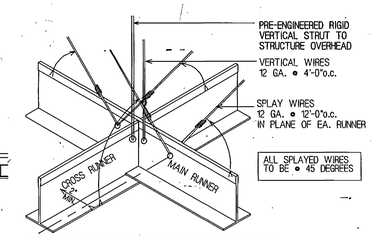

AREAS SMALLER THAN 144 SQ. FT. AND WITH WALLS ON FOUR SIDES EXTENDING TO STRUCTURE NEED NOT BE BRACED. NOTE: BOUNDARY WALLS MUST BE BRACED BOTH TOP AND BOTTOM INDEPENDANT OF CEILING TO QUALIFY.

CEILING DETAIL 1/A10
NO SCALE

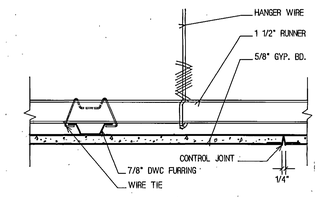

GYPSUM BRD. CEILING 2/A10
3" : 1'-0"

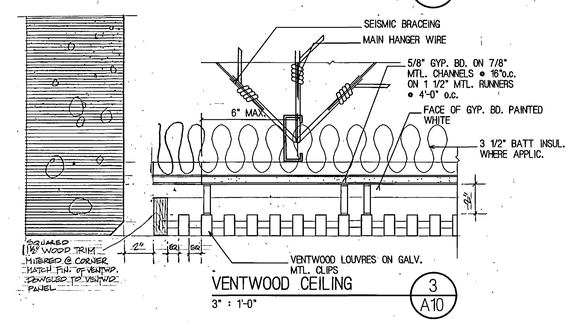

VENTWOOD CEILING 3/A10
3" : 1'-0"

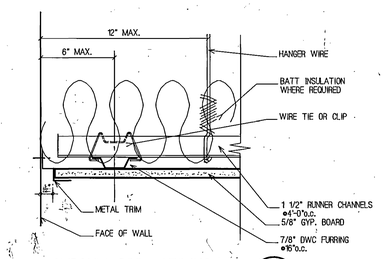

GYPSUM BRD. CEILING 4/A10
3" : 1'-0"

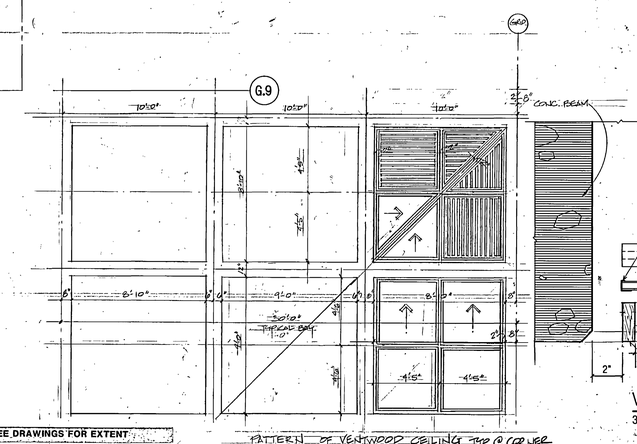

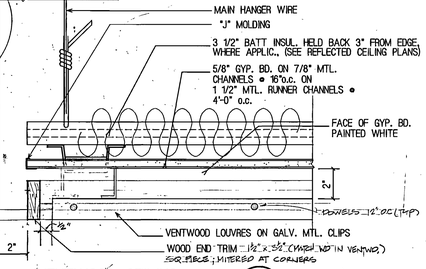

VENTWOOD CEILING 5/A10
3" : 1'-0"

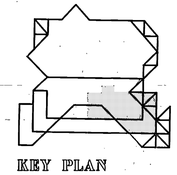

KEY PLAN

NORTH

LEVEL THREE CEILING PLAN 55
SCALE: 1/8" = 1'-0"

CODED NOTES

1. 5/8" GYPSUM BOARD (PAINTED)
2. CEILING MOUNTED FLUORESCENT FIXTURE
3. OPEN CEILING TO STRUCTURE
4. CEILING MOUNTED FLUORESCENT LIGHT FIXTURES
5. SUSPENDED FLUORESCENT STRIP LIGHT FIXTURES
6. EMERGENCY LIGHTING - SUSPENDED LIGHT FIXTURE
7. ADDITIONAL WOOD VALANCE, SEE SHEET A-18
8. METAL - VALANCE (MATCH EXISTING)
9. MATCH EXISTING CEILING W/5/8" GYPSUM BOARD, PATCH AND PAINT
10. EXISTING VALANCE TO BE MODIFIED.
11. REMOVE EXISTING WOOD VALANCE.
12. EXISTING WOOD VALANCE.
13. EXISTING SUSPENDED LIGHT FIXTURES.
14. EXIT SIGN
15. WALL MOUNTED INCANDESCENT FIXTURE
16. NEW SUSPENDED LIGHT FIXTURES, TIED INTO & TO MATCH EXISTING.
17. NEW 2'-6"x5'-0" ACOUSTICAL PANELS MOUNTED TO STRUCTURE, MATCH EXISTING
18. 30"x60" LAY-IN TILE
19. 2'x4' SUSPENDED FLUORESCENT LIGHT FIXTURE
20. NEW 2'-6"x5'-0" ACOUSTICAL PANELS MOUNTED TO STRUCTURE, MATCH EXISTING

CEILING LEGEND

- NEW SUSPENDED FIXTURE
- EXISTING LIGHT FIXTURE TO REMAIN
- WALL MOUNTED FLUORESCENT LIGHT FIXTURE
- WALL MOUNTED INCANDESCENT LIGHT FIXTURE
- EXIT SIGN
- CEILING MOUNTED INCANDESCENT LIGHT FIXTURE
- CEILING MOUNTED TRACK LIGHTS
- MECHANICAL DUCT
- 2'-6"x5'-0" ACOUSTICAL TILE
- EXISTING VALANCE TO REMAIN
- VALANCE TO BE REMOVED
- NEW WOOD VALANCE

MECHANICAL & ELECTRICAL WORK MAY OCCUR OUTSIDE DESIGNATED AREA SEE DRAWINGS FOR EXTENT

00000/Q4.10
Utah Valley Community College: Learning Resource Center - RV90014
Reflected Ceiling Level 3 South - 7217

AS BUILTS

UTAH VALLEY COMMUNITY COLLEGE LEARNING RESOURCE CENTER/LIBRARY ADDITION

CEILING DETAILS / LEVEL 3

STRUCTURAL ENGINEER : Bsumek Mu and Associates
MECHANICAL ENGINEER : VanBoerum and Frank
ELECTRICAL ENGINEER : Becherer Nielson and Associates
LANDSCAPE ARCHITECT : MGB and Associates
INTERIOR DESIGNER : Don Harward

DRAWN BY: AJ + KEP
CHECKED BY: KKP

STATE OF UTAH SCOTT LOUIE BROWNING P.E. 1148 ARCH. 255 ARCH. 455 Salt Lake City LICENSED ARCHITECTS & ENGINEERS

Scott, Louie and Browning
architects, engineers, planners
4766 Holladay Boulevard, Salt Lake City, Utah 84117

Utah Valley Community College
Learning Resource Center/Library Addition
Orem, Utah DFCM Project No. RV:90-014

A-10
Feb. 18, 1991

MONSEN ENGINEERING CO 108657

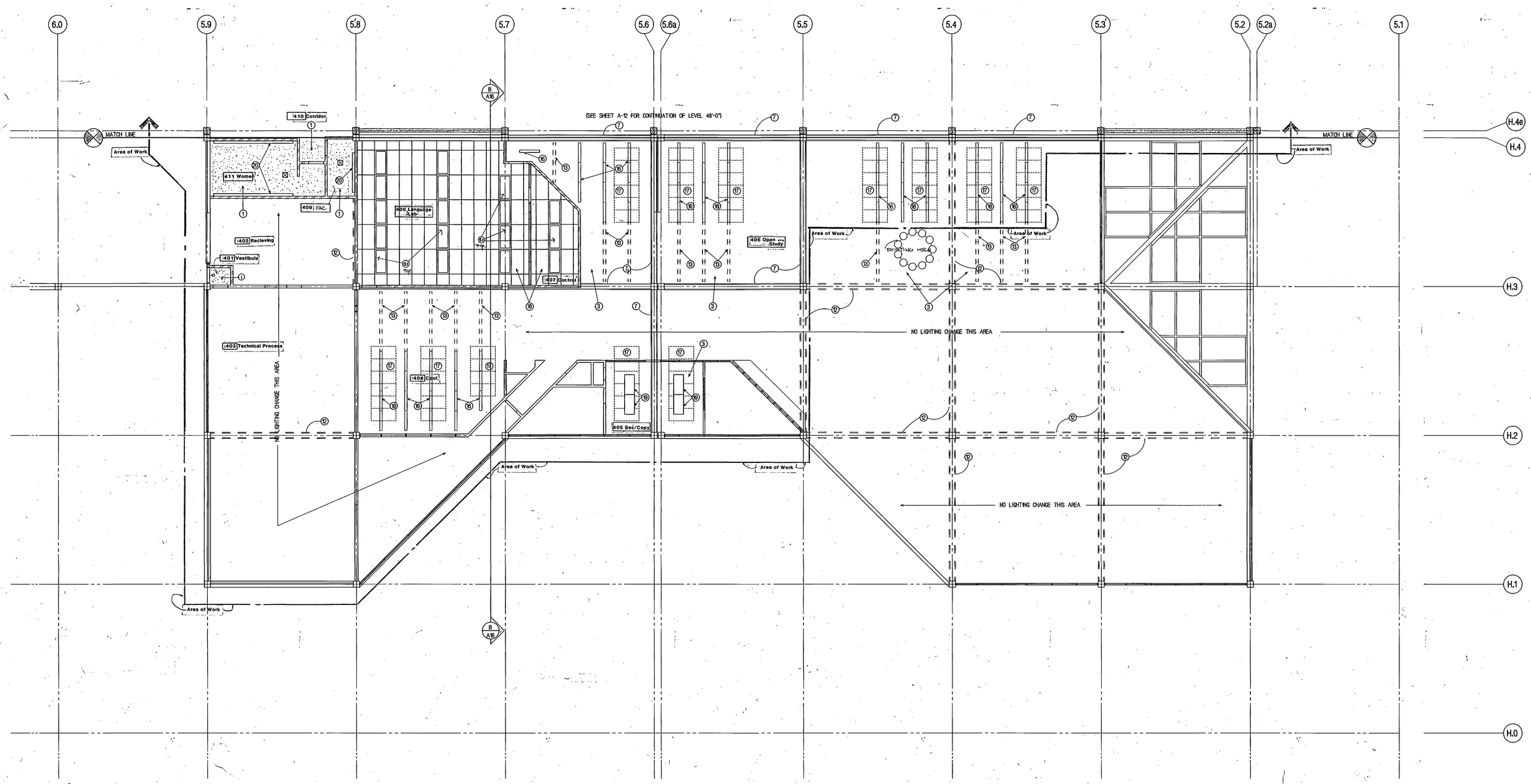

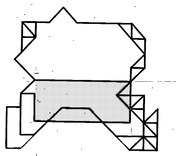

KEY PLAN

NORTH

LEVEL FOUR CEILING PLAN 48

SCALE: 1/8" = 1'-0"

CODED NOTES

1. 5/8" GYPSUM BOARD (PAINTED)
2. CEILING MOUNTED FLUORESCENT FIXTURE
3. OPEN CEILING TO STRUCTURE
4. CEILING MOUNTED FLUORESCENT LIGHT FIXTURES
5. SUSPENDED FLUORESCENT STRIP LIGHT FIXTURES
6. EMERGENCY LIGHTING - SUSPENDED LIGHT FIXTURE
7. ADDITIONAL WOOD VALANCE, SEE SHEET A-18
8. FIR — VALANCE (MATCH EXISTING)
9. MATCH EXISTING CEILING W/5/8" GYPSUM BOARD, PATCH AND PAINT
10. EXISTING VALANCE TO BE MODIFIED.
11. REMOVE EXISTING WOOD VALANCE.
12. EXISTING WOOD VALANCE.
13. EXISTING SUSPENDED LIGHT FIXTURES.
14. EXIT SIGN
15. WALL MOUNTED INCANDESCENT FIXTURE
16. NEW SUSPENDED LIGHT FIXTURES, TIED INTO & TO MATCH EXISTING.
17. NEW 2'-6"x5'-0" ACOUSTICAL PANELS MOUNTED TO STRUCTURE, MATCH EXISTING
18. 30"x60" LAY-IN TILE
19. 2'x4' SUSPENDED FLUORESCENT LIGHT FIXTURE
20. WALL MOUNTED FLUORESCENT LIGHT FIXTURES
21. FLUORESCENT LIGHT FIXTURE IN LAY-IN CLG.

CEILING LEGEND

- NEW SUSPENDED FIXTURE
- EXISTING LIGHT FIXTURE TO REMAIN
- WALL MOUNTED FLUORESCENT LIGHT FIXTURE
- WALL MOUNTED INCANDESCENT LIGHT FIXTURE
- EXIT SIGN
- CEILING MOUNTED INCANDESCENT LIGHT FIXTURE
- CEILING MOUNTED TRACK LIGHTS
- MECHANICAL DUCT
- 2'-6"x5'-0" ACOUSTICAL TILE
- EXISTING VALANCE TO REMAIN
- VALANCE TO BE REMOVED
- NEW WOOD VALANCE

MECHANICAL & ELECTRICAL WORK MAY OCCUR OUTSIDE DESIGNATED AREA SEE DRAWINGS FOR EXTENT

0000AQA11
Utah Valley Community College Learning Resource Center - RV 90-014
Reflected Ceiling Level 4 West - 7218

AS BUILTS

UTAH VALLEY COMMUNITY COLLEGE LEARNING RESOURCE CENTER/LIBRARY ADDITION

LEVEL 4

STRUCTURAL ENGINEER : Bsumek Mu and Associates
MECHANICAL ENGINEER : VanBoerum and Frank
ELECTRICAL ENGINEER : Becherer Nielson and Associates
LANDSCAPE ARCHITECT : MGB and Associates
INTERIOR DESIGNER : Don Harward

DRAWN BY: AN + KRP
CHECKED BY: KRP

STATE OF UTAH SCOTT, LOUIE & BROWNING P.E. 1148 ARCH. 220 ARCH. 432 Salt Lake City LICENSED ARCHITECTS & ENGINEERS

Scott, Louie and Browning
architects, engineers, planners
4766 Holladay Boulevard, Salt Lake City, Utah 84117

Utah Valley Community College
Learning Resource Center/Library Addition
Orem, Utah DFCM Project No. RV:90-014

A-11
Feb. 18, 1991

MONSEN ENGINEERING CO 108657

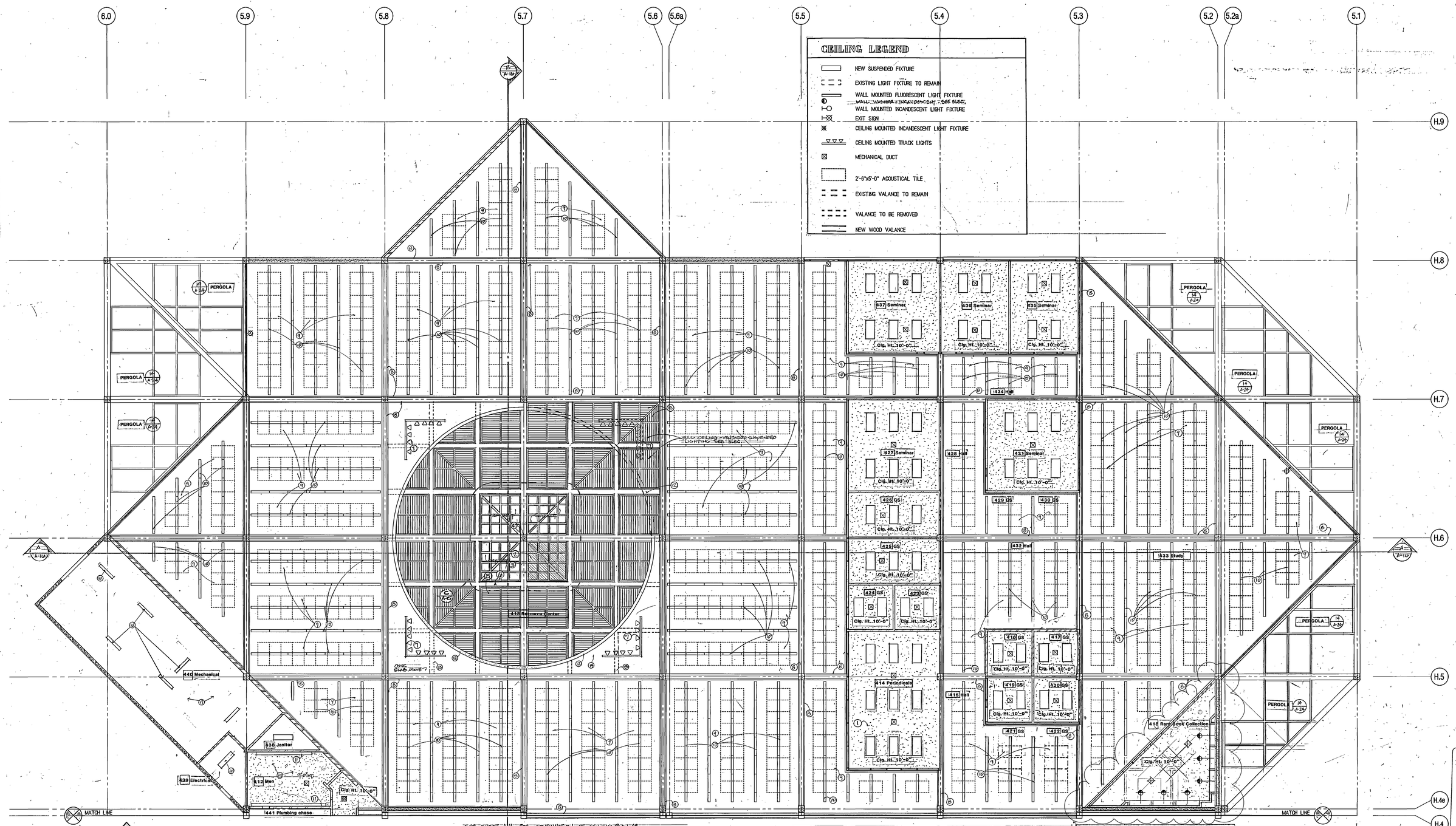

CEILING LEGEND

- NEW SUSPENDED FIXTURE
- EXISTING LIGHT FIXTURE TO REMAIN
- WALL MOUNTED FLUORESCENT LIGHT FIXTURE
- WALL WASHER - INCANDESCENT - SEE ELEC.
- WALL MOUNTED INCANDESCENT LIGHT FIXTURE
- EXIT SIGN
- CEILING MOUNTED INCANDESCENT LIGHT FIXTURE
- CEILING MOUNTED TRACK LIGHTS
- MECHANICAL DUCT
- 2'-6"x5'-0" ACOUSTICAL TILE
- EXISTING VALANCE TO REMAIN
- VALANCE TO BE REMOVED
- NEW WOOD VALANCE

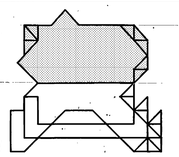

KEY PLAN

NORTH

LEVEL FOUR CEILING PLAN 48

SCALE: 1/8" = 1'-0"

CODED NOTES CONT.

12. 8" concrete ring beam see section B/A-16
13. Line of structure above/ and pattern of beam @ clerestory
14. Concrete slab
15. Gyp. Bd. ceiling at 9'-0" Ht. to be painted
16. Suspended flourescent fixture (see electrical)
17. open ceiling with structure above
18. Pattern of Ventwood opposite direction from each other see detail sheet A-10

CODED NOTES

1. 5/8" GYPSUM BOARD CEILING @ 10'-0"
2. SKYLIGHT
3. 16" WIDE CONCRETE BEAM
4. 16" X 16" CONCRETE COLUMN
5. VENTWOOD SUSPENDED CEILING, SEE SHEET A-10
6. CONCRETE BEAM
7. INCANDESCENT LIGHT TRACK - SEE ELECT.
8. CONTINUOUS LIGHT TROUGH, SUSPENDED, BUILDING STANDARD
9. 30" X 60" MINERAL FIBER ACOUSTICAL PANEL ON CONCRETE SLAB
10. CONTINUOUS 6" X 4'-0" FLOURESCENT FIXTURE, BUILDING STANDARD
11. SURFACE MOUNTED FLOURESCENT FIXTURE, BUILDING

AS BUILTS

0000AQA12
Utah Valley Community College Learning Resource Center - RV 90-014
Reflected Ceiling Level 4 Est. - 7219

UTAH VALLEY COMMUNITY COLLEGE LEARNING RESOURCE CENTER/LIBRARY ADDITION

LEVEL 4

STRUCTURAL ENGINEER	: Bsumek Mu and Associates
MECHANICAL ENGINEER	: VanBoerum and Frank
ELECTRICAL ENGINEER	: Becherer Nielson and Associates
LANDSCAPE ARCHITECT	: MGB and Associates
INTERIOR DESIGNER	: Don Harward

DRAWN BY: AN + KRP
CHECKED BY: KRP

STATE OF UTAH SCOTT, LOUIE & BROWNING P.E. 1165 ARCH. 336 ARCH. 432 Salt Lake City LICENSED ARCHITECTS & ENGINEERS

Scott, Louie and Browning
architects, engineers, planners
4766 Holladay Boulevard, Salt Lake City, Utah 84117

Utah Valley Community College
Learning Resource Center/Library Addition
Orem, Utah DFCM Project No. RV:90-014

A-12
Feb. 18, 1991

MONSEN ENGINEERING CO. 108657

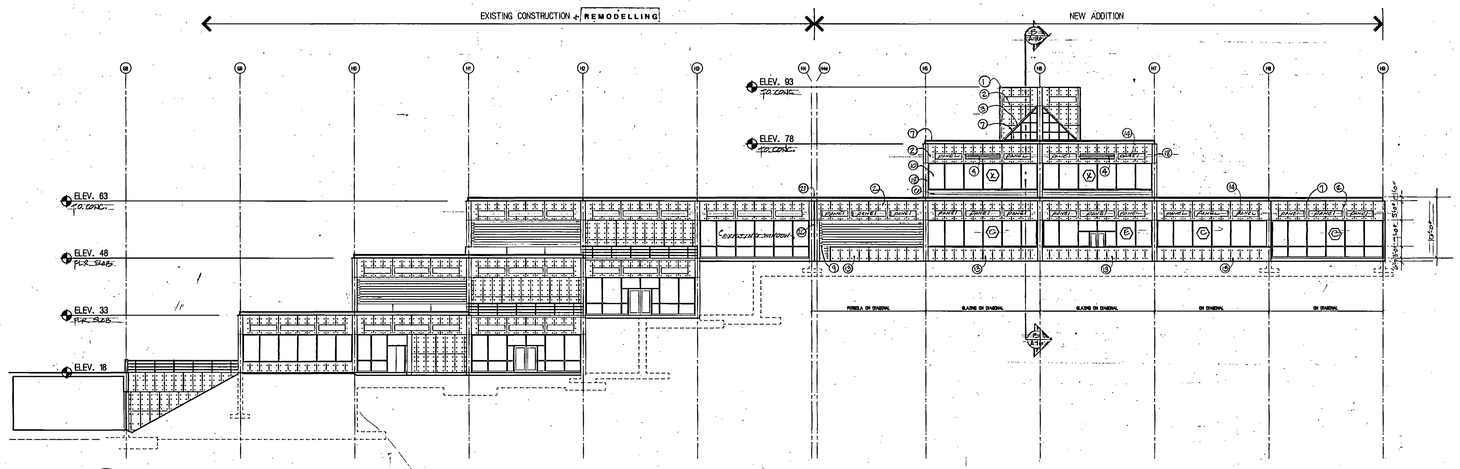

A SOUTH ELEVATION
A-13 SCALE 1/8" = 1'-0"

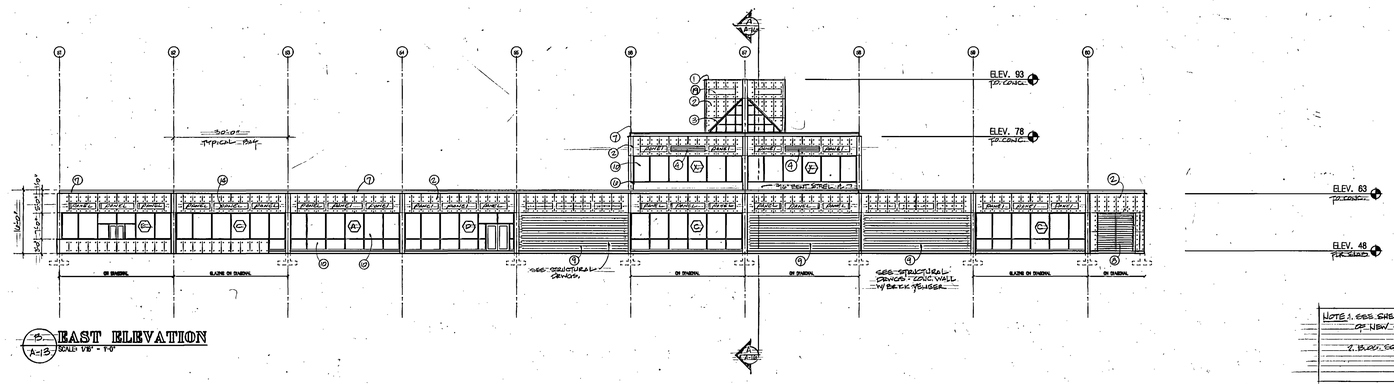

B EAST ELEVATION
A-13 SCALE 1/8" = 1'-0"

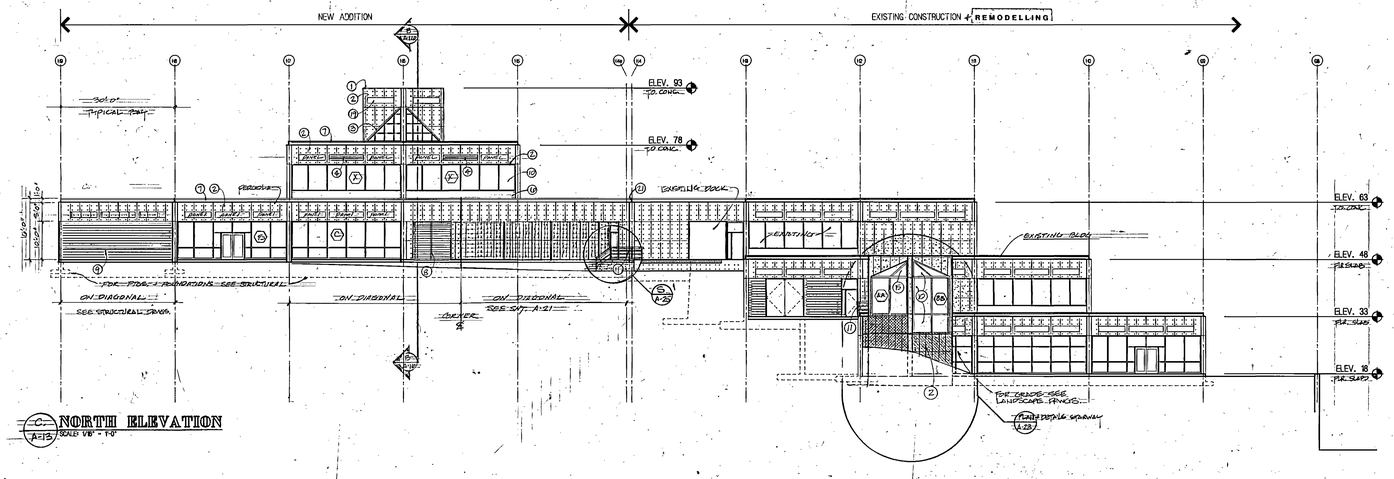

C NORTH ELEVATION
A-13 SCALE 1/8" = 1'-0"

CODED NOTES

1. CHAMFERED EDGE @ T.O. CONCRETE
2. EXPOSED CONCRETE
3. SKYLIGHT - SEE SHEET A-21
4. MECHANICAL LOUVER - SEE MECHANICAL DRAWINGS
5. FLASHING @ SILL
6. 3/16" Bent Sill Plate fastened to conc. block - to be ptd.
7. FLASHING/COPING DETAIL SEE SHEET A-17
8. 10' X 10' MECHANICAL LOUVER
9. BRICK VENEER ON STUD WALL OR SHEAR WALL (CONC.)
10. 1/4" INSULATED GLASS - CLEAR
11. 2" DIA. PIPE RAILING - TO BE PAINTED
12. CONCRETE STAIR - EXTERIOR W/ABRASIVE NOSING
13. LOW CONCRETE EXTERIOR WALL - SEE SHEET A-6
14. 1/2" CEMENT BOARD (EXT.) + GYP. BD. (INT.) INFILL PANEL MATCH EXISTING
15. SLOPED GLAZING
16. EXISTING SERVICE DOOR
17. EXISTING CONCRETE WALL
18. NEW CONCRETE COL. 16" SQ. TYPICAL
19. OPEN THROUGH CONCRETE WALL
20. EXPANSION JOINT - PRE-COMPRESSED EXP. JOINT FILLER
21. EXPANSION JOINT AT ROOF MEMBRANE - SEE DET. A-18

NOTE: SEE SHEETS A-14 & A-15 FOR ENLARGED ELEVATIONS OF NEW CONSTRUCTION + REMODELED AREA
& BUILDING SECTIONS SEE SHEET A-10

0000AQA13
Utah Valley Community College Learning Resource Center - RV 90-014
Elevations - 7220

AS BUILTS

UTAH VALLEY COMMUNITY COLLEGE LEARNING RESOURCE CENTER/LIBRARY ADDITION

ELEVATIONS

STRUCTURAL ENGINEER : Bsumek Mu and Associates
MECHANICAL ENGINEER : VanBoerum and Frank
ELECTRICAL ENGINEER : Becherer Nielson and Associates
LANDSCAPE ARCHITECT : MGB and Associates
INTERIOR DESIGNER : Don Harward

DRAWN BY: kep
CHECKED BY: kep

STATE OF UTAH SCOTT, LOUIE & OWNING P.E. 1186 ARCH. 228 ARCH. 488 Salt Lake City LICENSED ARCHITECTS & ENGINEERS

Scott, Louie and Browning
architects, engineers, planners
4766 Holladay Boulevard, Salt Lake City, Utah 84117

Utah Valley Community College
Learning Resource Center/Library Addition
Orem, Utah DFCM Project No. RV-90-014

A-13
Feb. 18, 1991

MONSEN ENGINEERING CO 108657

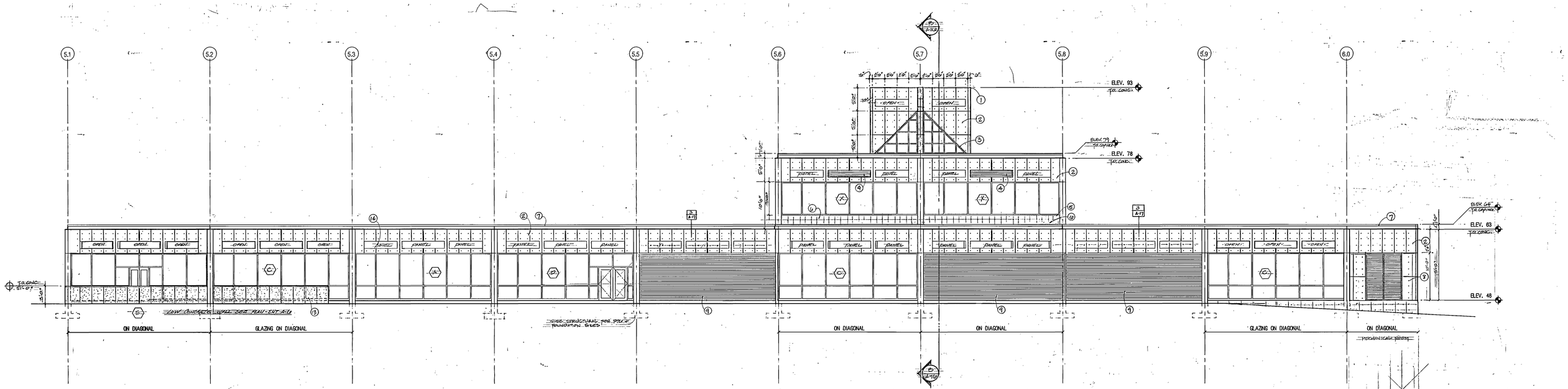

EAST ELEVATION

SCALE: 1/8" = 1'-0"

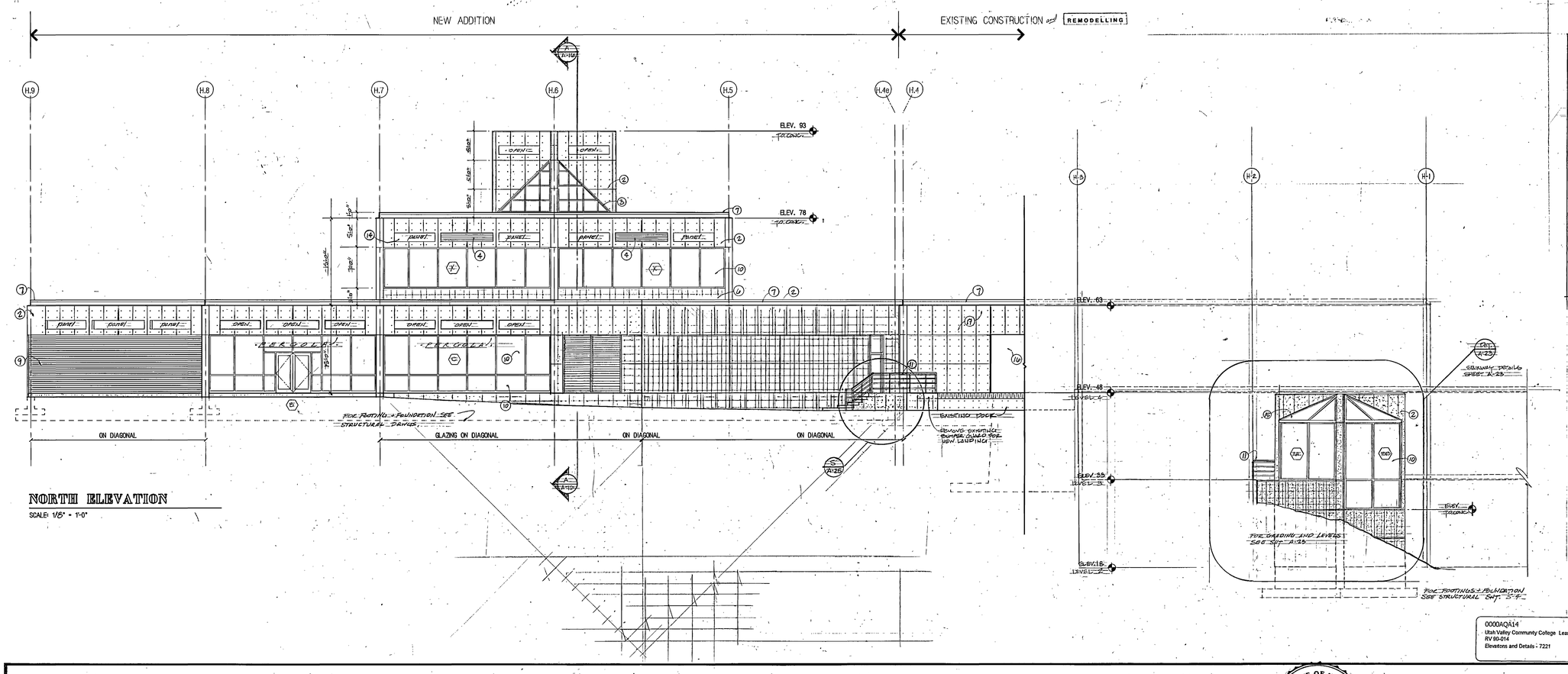

NORTH ELEVATION

SCALE: 1/8" = 1'-0"

CODED NOTES

1. CHAMFERED EDGE @ T.O. CONCRETE
2. EXPOSED CONCRETE
3. SKYLIGHT - SEE SHEET A-21
4. MECHANICAL LOUVER - SEE MECHANICAL DRAWINGS
5. FLASHING @ SILL
6. 3/16" Bent Stl. Plate fastened to conc. block to be ptd
7. FLASHING/COPING DETAIL SEE SHEET A-17
8. 10' X 10' MECHANICAL LOUVER
9. BRICK VENEER ON STUD WALL OR SHEAR WALL (CONC.)
10. 1/4" INSULATED GLASS - CLEAR
11. 2" DIA. PIPE RAILING - TO BE PAINTED
12. CONCRETE STAIR - EXTERIOR W/ABRASIVE NOSING
13. LOW CONCRETE EXTERIOR WALL - SEE SHEET A-6
14. 1/2" CEMENT BOARD (EXT.) + GYP. BD. (INT.) INFILL PANEL MATCH EXISTING
15. SLOPED GLAZING
16. EXISTING SERVICE DOOR
17. EXISTING CONCRETE WALL

0000AQA14
Utah Valley Community College Learning Resource Center - RV 90-014
Elevations and Details - 7221

AS BUILTS

UTAH VALLEY COMMUNITY COLLEGE LEARNING RESOURCE CENTER/LIBRARY ADDITION

ELEVATIONS

STRUCTURAL ENGINEER	: Bsumek Mu and Associates
MECHANICAL ENGINEER	: VanBoerum and Frank
ELECTRICAL ENGINEER	: Becherer Nielson and Associates
LANDSCAPE ARCHITECT	: MGB and Associates
INTERIOR DESIGNER	: Don Harward

DRAWN BY: KRP + AN
CHECKED BY: KRP

STATE OF UTAH SCOTT, LOUIE & BROWNING P.E. 1145 ARCH. 230 ARCH. 432 Salt Lake City LICENSED ARCHITECTS & ENGINEERS

Scott, Louie and Browning
architects, engineers, planners
4766 Holladay Boulevard, Salt Lake City, Utah 84117

Utah Valley Community College
Learning Resource Center/Library Addition
Orem, Utah DFCM Project
No. RV:90-014

A-14
Feb. 18, 1991

MONSEN ENGINEERING CO 108657

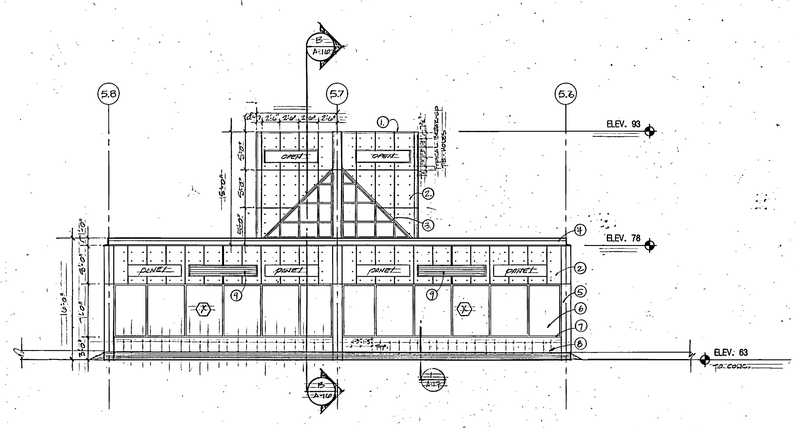

WEST ELEVATION
SCALE: 1/8" = 1'-0"

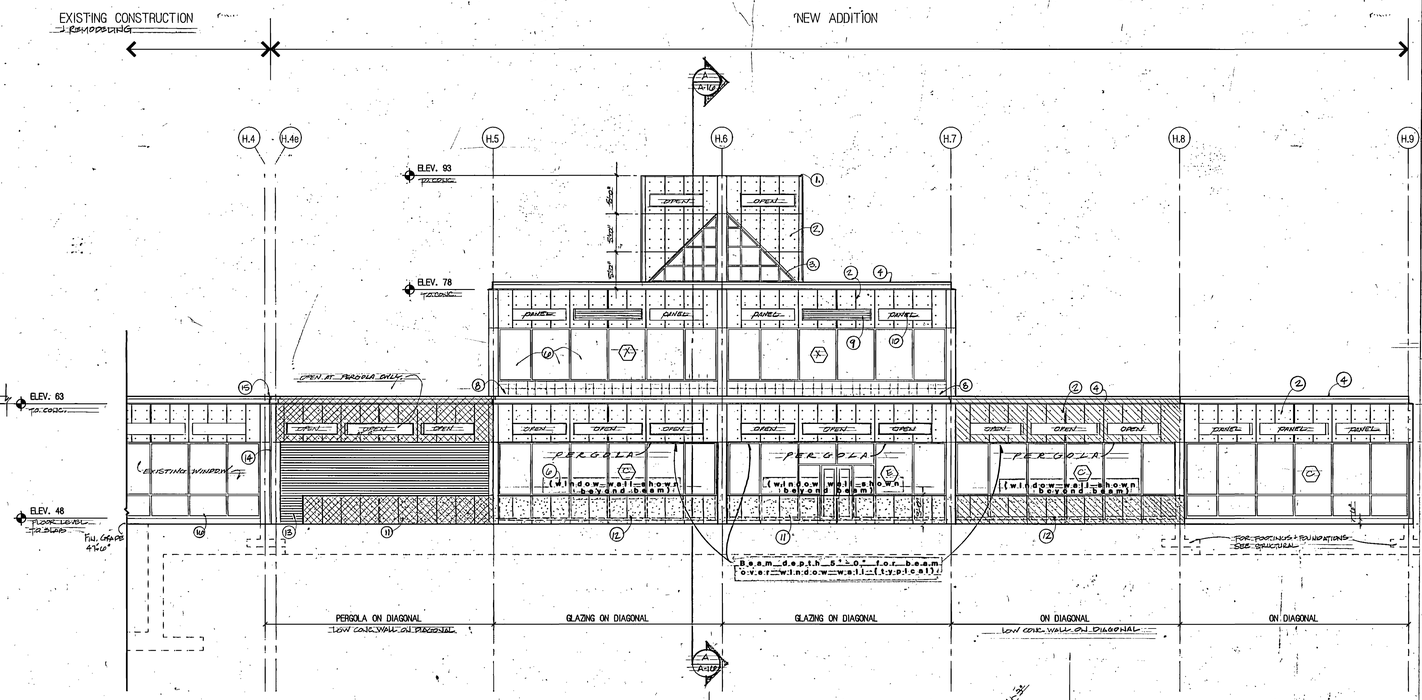

SOUTH ELEVATION
SCALE: 1/8" = 1'-0"

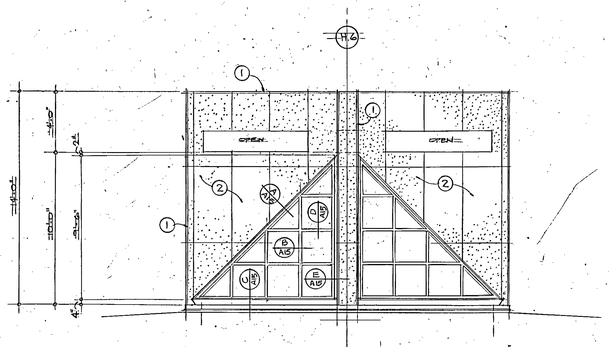

ELEVATION @ SKYLIGHT
SCALE 1/4" = 1'-0"

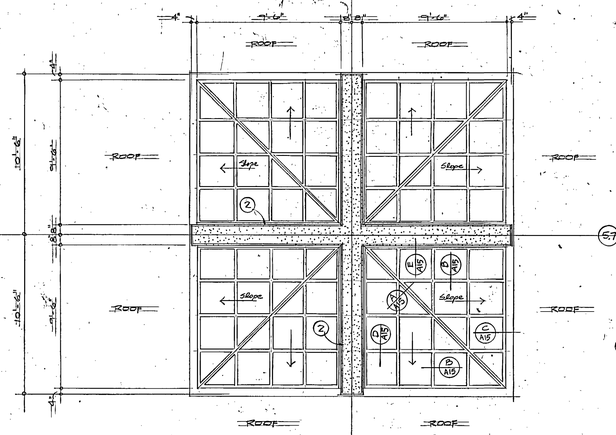

PLAN @ SKYLIGHT
SCALE 1/4" = 1'-0"

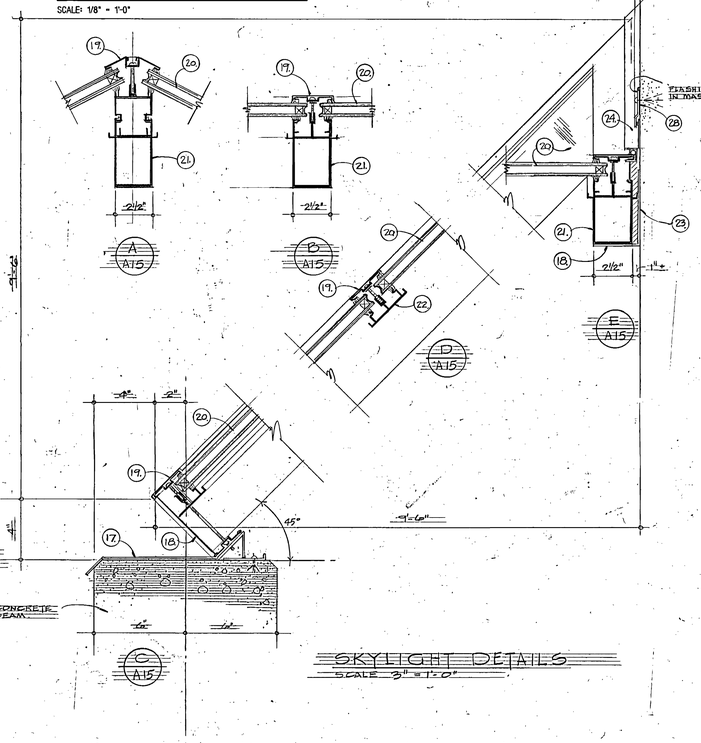

SKYLIGHT DETAILS
SCALE 3" = 1'-0"

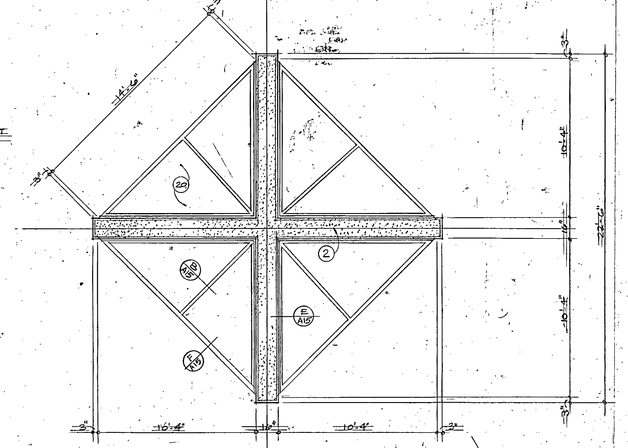

SKYLIGHT @ STAIRWAY
SCALE 1/4" = 1'-0"

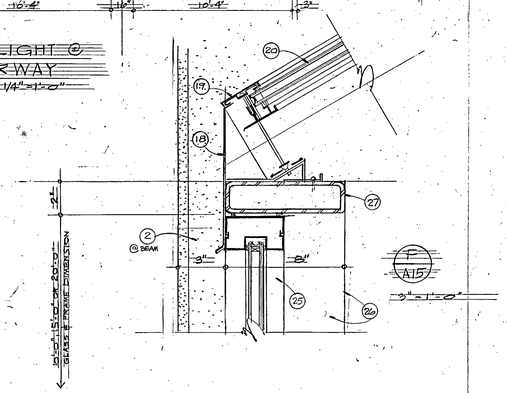

3" = 1'-0"

CODED NOTES

1. 3/4" CHAMFERED EDGE @ T.O. CONC. WALL
2. EXPOSED CONCRETE
3. SKYLIGHT SEE SHEET A-17
4. FLASHING W/GRAVEL STOP @ COPING
5. 16" CONC. COLUMN - TYPICAL NEW CONSTRUCTION
6. 1/4" INSULATED GLASS - CLEAR
7. FLASHING @ SILL ON BLOCK WALL PROVIDE WD. PLATE
8. 3/16" bent stl. plate fastened/ match existing condition
9. MECHANICAL LOUVER RECESSED - SEE MECHANICAL DRWGS.
10. 1/2" CEMENT BD. (EXT.) WITH GYP. BD. PAINTED (INT.) TYPICAL
11. 3'-0" LOW CONCRETE WALL 6" WIDTH - SEE PLAN A-6
12. WINDOW SYSTEM BEYOND
13. BRICK VENEER ON CONC. WALL
14. EXPANSION JOINT - PRE-COMPRESSED EXPANDABLE JOINT FILLER (CONT.)
15. EXPANSION JOINT/ROOF MEMBRANE - SEE DETAIL SHT. A-18
16. EXISTING WINDOW WALL SYSTEM
17. Counter Flashing
18. Aluminum Closure - COLOR FINISH TO MATCH WINDOW WALL.
19. Retaining & Snap Cap
20. 1" Insulating Glass
21. Rafter
22. Purlin
23. Aluminum Hanger
24. Aluminum Flashing
25. METAL WINDOW WALL
26. T.S. 2"x4"x1/4" - COLOR TO MATCH WINDOW WALL
27. T.S. 2"x8"x1/4" - COLOR TO MATCH WINDOW WALL.
28. ALUMINUM COUNTER FLASHING SET IN MASTIC

0000AQA15
Utah Valley Community College Learning Resource Center - RV 90-014
Building Sections - 7222

AS BUILTS

UTAH VALLEY COMMUNITY COLLEGE LEARNING RESOURCE CENTER/LIBRARY ADDITION

ELEVATIONS

STRUCTURAL ENGINEER	: Bsumek Mu and Associates
MECHANICAL ENGINEER	: VanBoerum and Frank
ELECTRICAL ENGINEER	: Becherer Nielson and Associates
LANDSCAPE ARCHITECT	: MGB and Associates
INTERIOR DESIGNER	: Don Harward

DRAWN BY: A.N., W.B.
CHECKED BY: WR

STATE OF UTAH
SCOTT, LOUIE & BROWNING
P.E. 1145
ARCH. 335
ARCH. 432
Salt Lake City
LICENSED ARCHITECTS & ENGINEERS

Scott, Louie and Browning
architects, engineers, planners
4766 Holladay Boulevard, Salt Lake City, Utah 84117

Utah Valley Community College
Learning Resource Center/Library Addition
Orem, Utah DFCM Project No. RV:90-014

A-15
Feb. 18, 1991

MONSEN ENGINEERING CO 108657

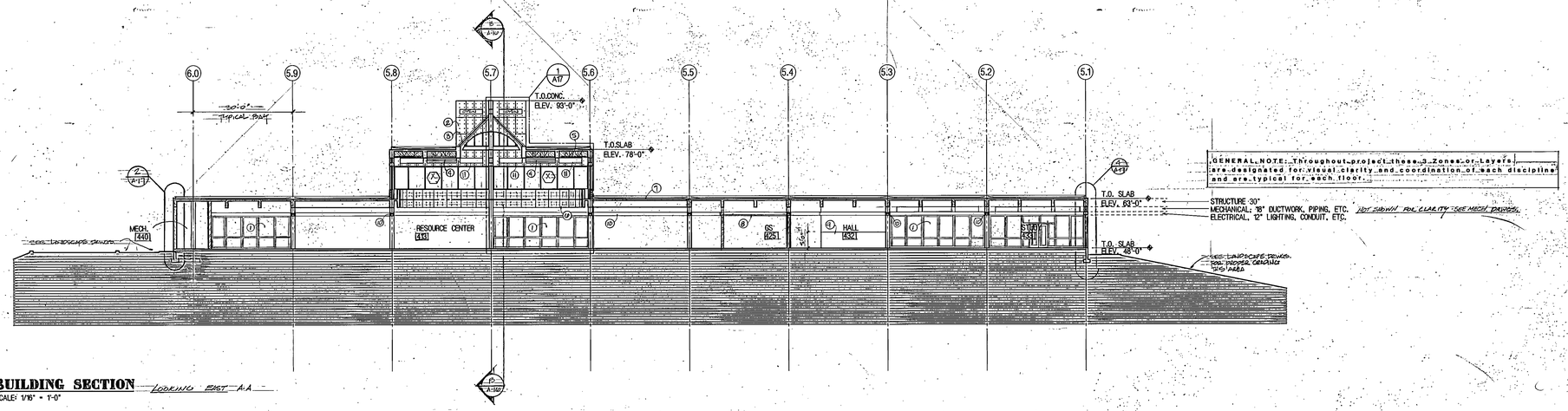

BUILDING SECTION LOOKING EAST A-A
SCALE: 1/16" = 1'-0"

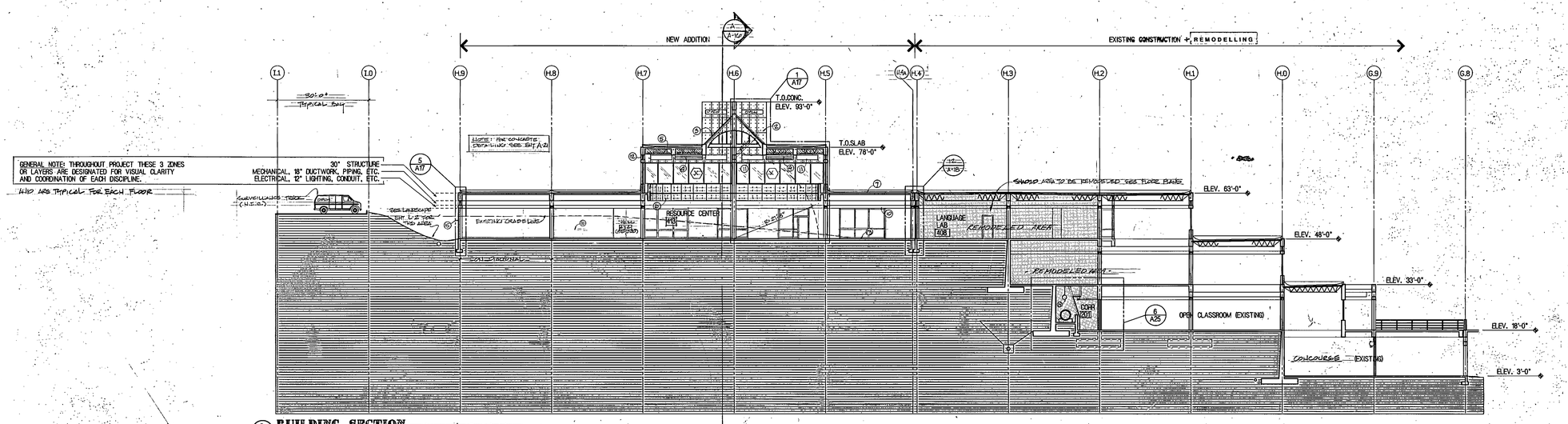

BUILDING SECTION LOOKING SOUTH B-B
SCALE: 1/16" = 1'-0"

CODED NOTES

1. EXTERIOR GLASS WINDOW SYSTEM BEYOND
2. EXPOSED CONCRETE EXTERIOR
3. SKYLIGHT
4. MECHANICAL LOUVER - SEE MECHANICAL
5. SUSPENDED CLG. W/VENTWOOD
6. EXPOSED CONC. INT. (CIRCLE)
7. BUILT-UP ROOF ON CONC. SLAB
8. SUSPENDED 5/8" GYP BD. CEILING PTD.
9. LOW PARTITION SEE SHT. A-18
10. LIGHT FIXTURE - TYPICAL
11. PAINTED GYPSUM BOARD
12. INFILL PANEL 1/2" CEMENT BOARD EXT./GYP. BOARD INT.
13. 4" CONC. SLAB
14. MECHANICAL DUCT RELOCATED
15. BRICK VENEER EXT. WALL

000DAQ016
Utah Valley Community College Learning Resource Center -
Elevations - 7223

AS BUILTS

UTAH VALLEY COMMUNITY COLLEGE LEARNING RESOURCE CENTER/LIBRARY ADDITION

STRUCTURAL ENGINEER	: Bsumek Mu and Associates
MECHANICAL ENGINEER	: VanBoerum and Frank
ELECTRICAL ENGINEER	: Becherer Nielson and Associates
LANDSCAPE ARCHITECT	: MGB and Associates
INTERIOR DESIGNER	: Don Harward

DRAWN BY: AN + KRP
CHECKED BY: KRP

STATE OF UTAH — SCOTT LOUIE BROWNING — S.E. 1148, ARCH. 235, ARCH. 451 — Salt Lake City — LICENSED ARCHITECTS & ENGINEERS

Scott, Louie and Browning
architects, engineers, planners
4766 Holladay Boulevard, Salt Lake City, Utah 84117

BUILDING SECTIONS

Utah Valley Community College
Learning Resource Center/Library Addition
Orem, Utah DECM Project No. RV:90-014

A-16

Feb. 18, 1991

MONSEN ENGINEERING CO. 108557

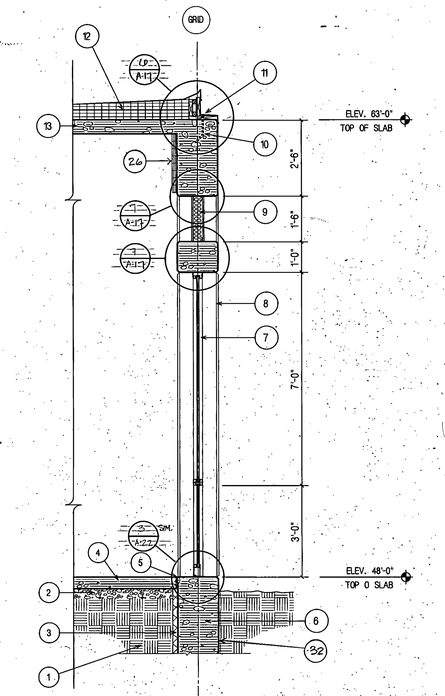

4 GLAZING WALL SECTION
A-17 SCALE: 1/2" = 1'-0"

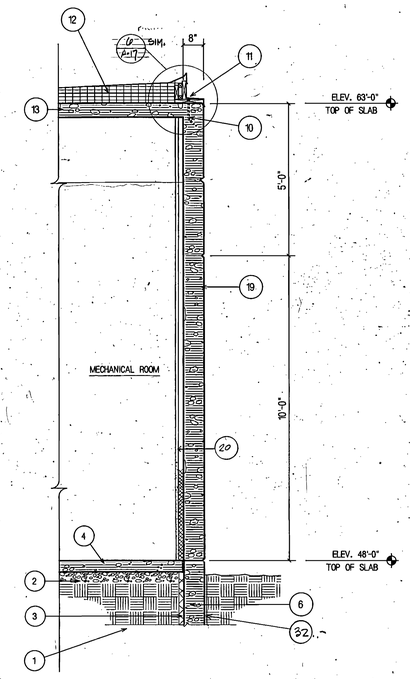

2 CONCRETE WALL SECTION
A-17 SCALE: 1/2" = 1'-0"

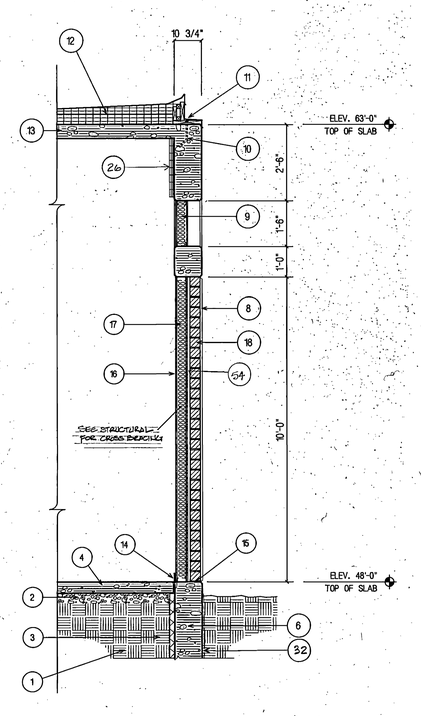

5 BRICK WALL SECTION
A-17 SCALE: 1/2" = 1'-0"

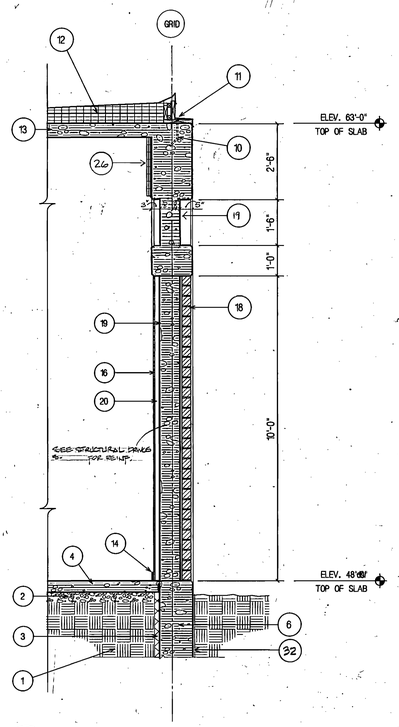

3 CONCRETE WALL SECTION
A-17 SCALE: 1/2" = 1'-0"

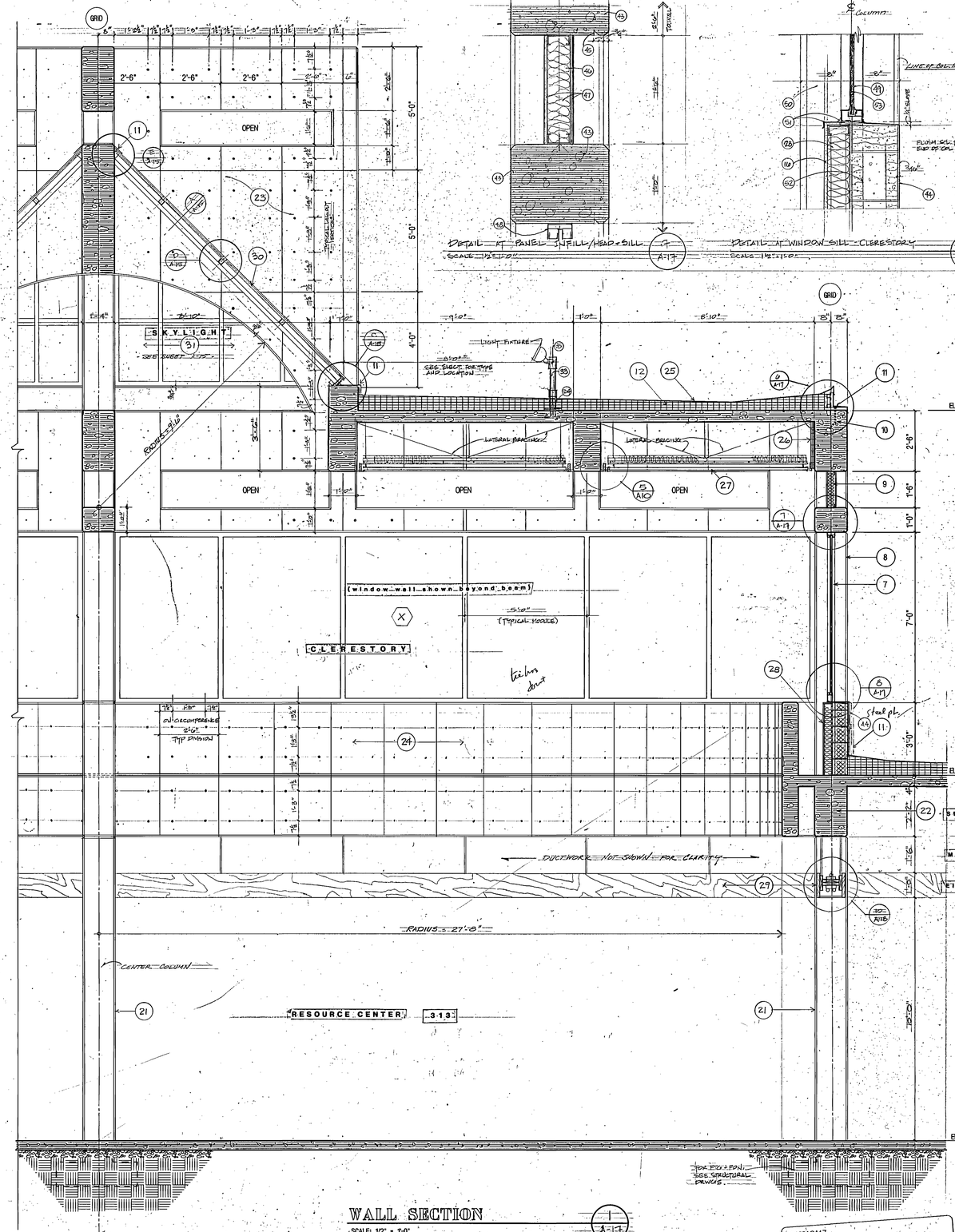

WALL SECTION
SCALE: 1/2" = 1'-0"

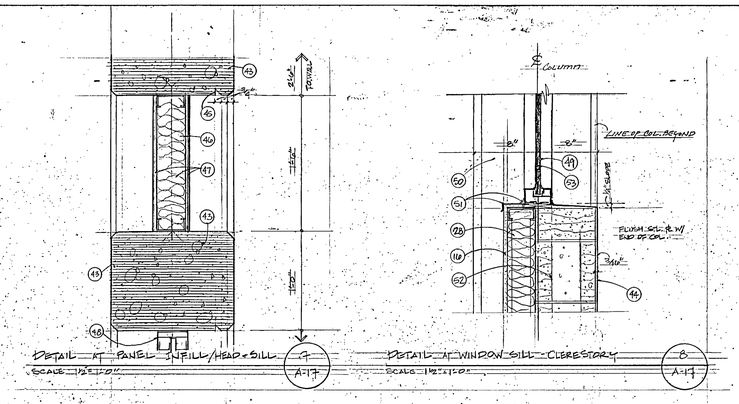

CODED NOTES

1. EARTH
2. 4" GRAVEL
3. 1 1/2" PERIMETER INSULATION
4. 4" CONCRETE SLAB
5. ISOLATION JOINT
6. FOUNDATION
7. 1" INSUL. GLASS IN FACTORY FINISHED METAL WINDOW WALLL
8. LINE OF COLUMN BEYOND
9. METAL INFILL PANEL FACTORY FINISHED TO MATCH METAL WINDOW WALL ON 3 5/8" CONT. METAL STUDS W/ 5/8" GYP. BD. ON THE INTERIOR & 3" BATT INSUL. BETWEEN STUDS WHERE SHOWN
10. 1/2" ANCHOR BOLT.
11. FLASHING / PRE-FINISH TO MATCH EXISTING
12. ROOF INSULATION / SLOPE TO DRAIN ¼" TO 1'-0"
13. CONCRETE SLAB SEE STRUCTURAL
14. 4" WOOD BASE
15. CONCEALED FLASHING
16. 5/8" GYPSUM BOARD
17. 4" THICK BLANKET INSULATION
18. BRICK
19. CONCRETE WALL
20. 2" Z-CHANNELS W/RIGID INSULATION
21. 16" X 16" CONCRETE COLUMNS. SEE STRUCTURAL
22. CONCRETE BEAM. SEE STRUCTURAL
23. CONCRETE BEAM - WALL. SEE SHEET S-3
24. CONCRETE RAILING - WALL. SEE SHEET S-3
25. SINGLE PLY ROOFING W/ GRAVEL SEE SPECS.
26. 2" INSULATION ON CLIPS
27. VENTWOOD LOUVRES ON GYP.BD. BATT INSULATION ABOVE. SEE DETAILS SHEET A-10 AND REFLECTED CEILING PLAN SHEET A-12 FOR EXTENT.
28. 5/8" GYP.BD. ON 3-1/2" METAL STUDS @ 16"O.C. 3-1/2" BATT INSULATION
29. CONTINUOUS LIGHT FIXTURE. SEE RE - FLECTED CEILING PLAN SHT. A-12 FOR EXTENT
30. DOUBLE GLAZED SKYLIGHT
31. SKYLIGHT BEYOND
32. Waterproof Membrane
33. 2" Rigid Conduit (by electrical)
34. Threaded Coupling at base
35. Splice box furnish w/ fixture
36. Vertical flood light fixture (see elec. Sht. E2-6)
37. Prefinished metal flashing- match existing flashing on existing Learning Resource Center(typ.).
38. Single Ply membrane (mechanically fastened)
39. Cont. hold down clip
40. Shaped 2x8 plate w/ 3/8" diam. A.B. @ 32" o.c. (treated)
41. 2x10 nailers w/ blocking (HANGERS TO BE TREATED)
42. Solid 45° cut blocking for capping
43. Concrete Edge beam
44. 3/16" bent stl. pl. fastened to conc. block wall w/ hex. bolt &washer: match existing - to be painted (bolts will occur at same spacing as conc. tie holes.)
45. Cont. drip typical - see det. 3/ A-24
46. 20 Ga. factory finished panel w/ 3/4" backer blind fastened
47. Metal infill panel to match existing metal window wall on 5/8" cont. metal studs (20 ga.) w/ Gyp. Bd. on the interior & 3 5/8" batt insulation between studs.
48. Head condition of window see det. 1/ A-22
49. 1" insulated glass
50. Chamfered column beyond
51. Metal edge (typ.) w/ cont. sealant
52. 8" concrete block (CMU)
53. Steel window wall system (see window details)
54. #15 Bldg. felt on sheathing/ stud wall with bracing see structural.

GENERAL NOTE
throughout Project these 3 zones or layers are designated for visual clarity & coordination

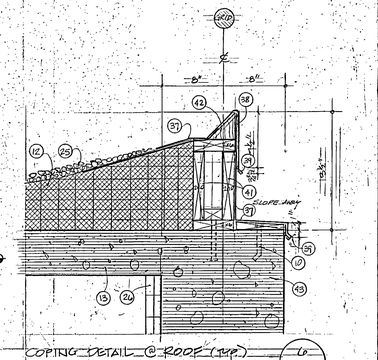

COPING DETAIL @ ROOF (TYP.)
SCALE: 1/2" = 1'-0"

0000AQA17
Utah Valley Community College Learning Resource Center - RV 90-014
- Wall Sections - 7224

AS BUILTS

UTAH VALLEY COMMUNITY COLLEGE LEARNING RESOURCE CENTER/LIBRARY ADDITION

WALL SECTIONS

STRUCTURAL ENGINEER	: Bsumek Mu and Associates
MECHANICAL ENGINEER	: VanBoerum and Frank
ELECTRICAL ENGINEER	: Becherer Nielson and Associates
LANDSCAPE ARCHITECT	: MGB and Associates
INTERIOR DESIGNER	: Don Harward

DRAWN BY: AWE, KRP
CHECKED BY: KRP

STATE OF UTAH — SCOTT, LOUIE & BROWNING — P.E. 1195, ARCH. 233, ARCH. 458 — Salt Lake City — LICENSED ARCHITECTS & ENGINEERS

Scott, Louie and Browning
architects, engineers, planners
4766 Holladay Boulevard, Salt Lake City, Utah 84117

Utah Valley Community College
Learning Resource Center/Library Addition
Orem, Utah DFCM Project No. RV:90-014

A-17
Feb. 18, 1991

MONSEN ENGINEERING CO 108857

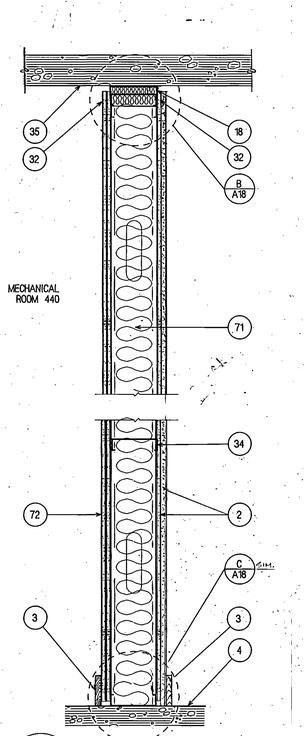

1 A18 WALL TYPE 1 1 HR. RATED WALL
1 1/2" = 1'-0"

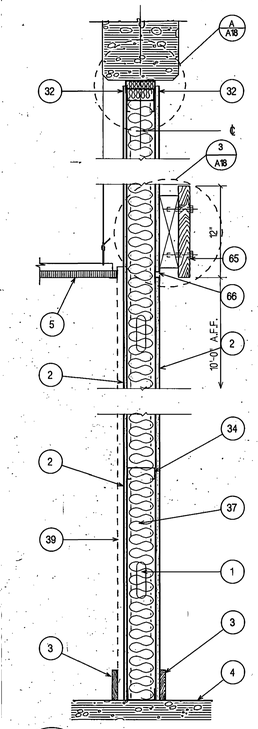

2 A18 WALL TYPE 2
1 1/2" = 1'-0"

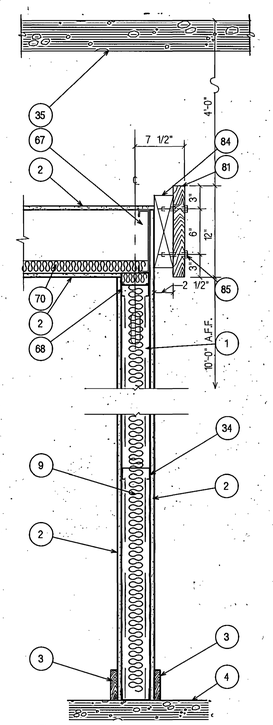

3 A18 WALL TYPE 3 SOUND WALL
1 1/2" = 1'-0"

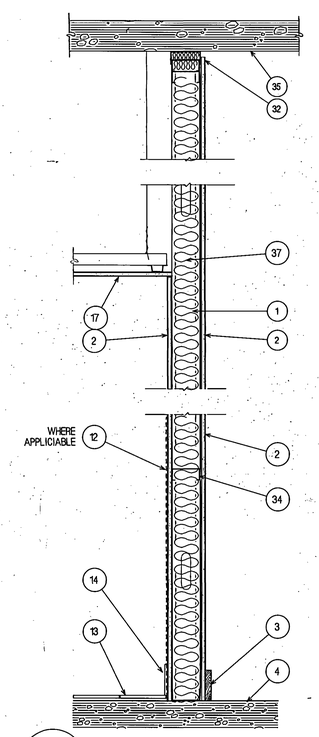

4 A18 WALL TYPE 4
1 1/2" = 1'-0"

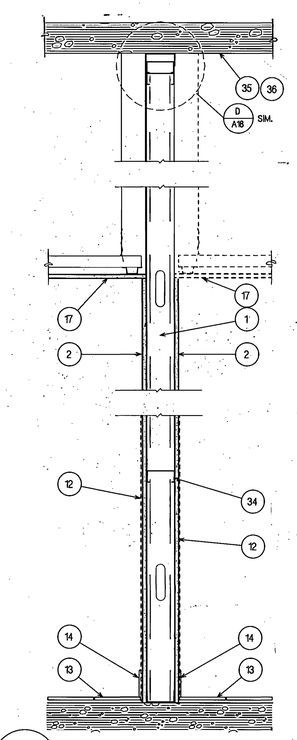

5 A18 WALL TYPE 5
1 1/2" = 1'-0"

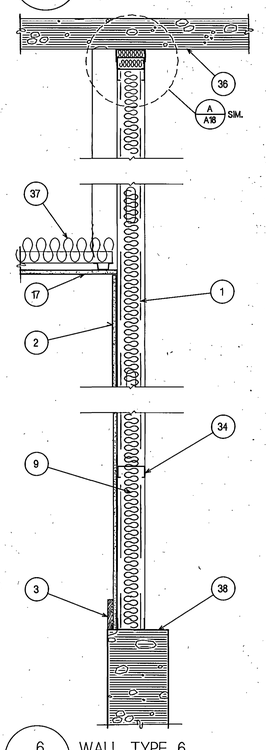

6 A18 WALL TYPE 6
1 1/2" = 1'-0"

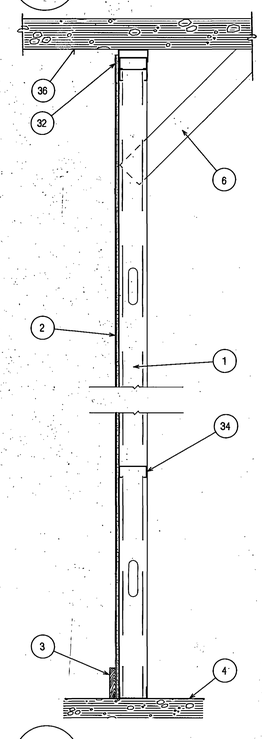

7 A18 WALL TYPE 7
1 1/2" = 1'-0"

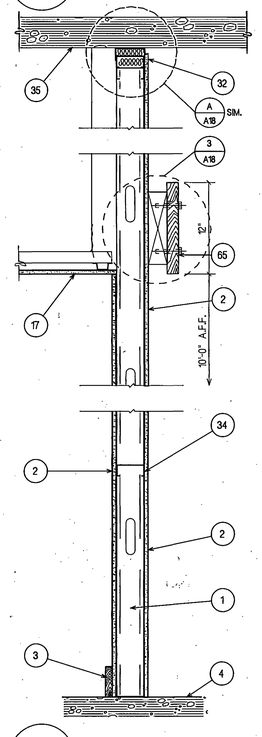

8 A18 WALL TYPE 8
1 1/2" = 1'-0"

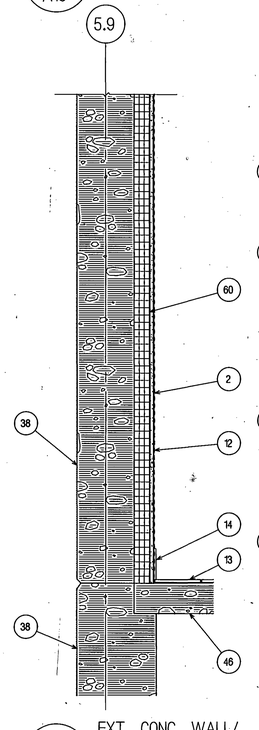

9 A18 EXT. CONC. WALL/ CERAMIC TILE
1 1/2" = 1'-0"

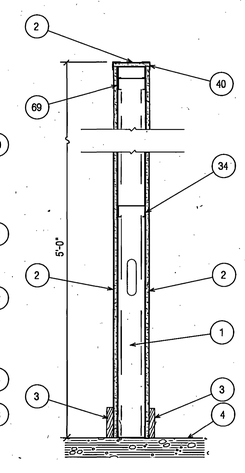

11 A18 LOW WALL PARTITION WALL TYPE 9
1 1/2" = 1'-0"

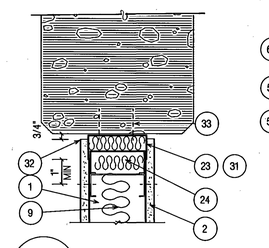

A A18 DETAIL SOUND WALL
3" = 1'-0"

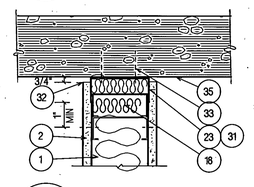

B A18 DETAIL RATED CONSTRUCTION
3" = 1'-0"

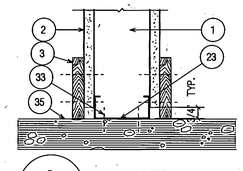

C A18 BASE DETAIL
3" = 1'-0"

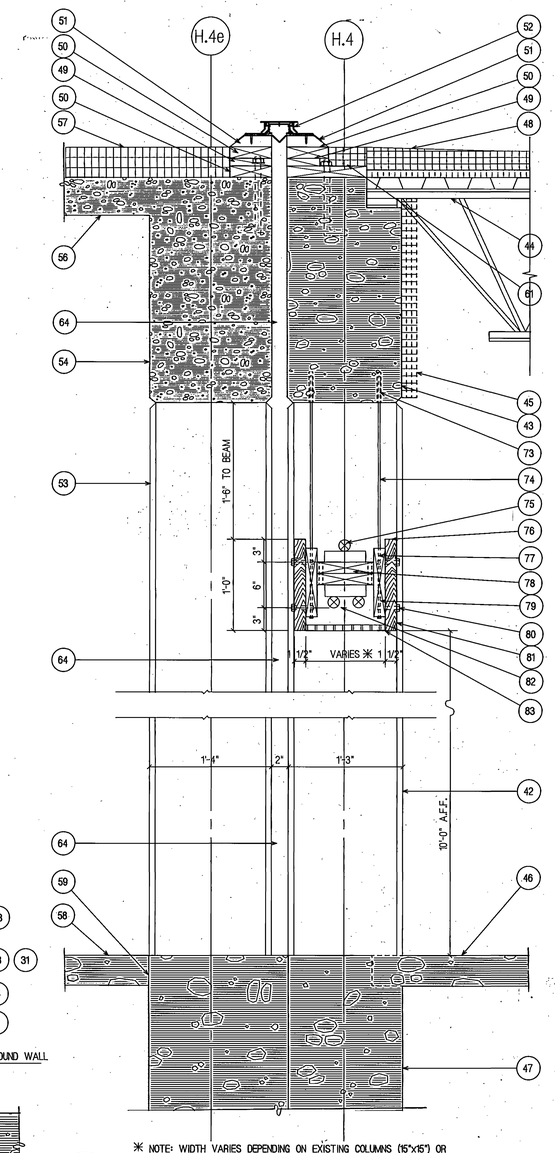

✳ NOTE: WIDTH VARIES DEPENDING ON EXISTING COLUMNS (15"x15") OR NEW COLUMNS (16"x16"), SEE FLOOR PLANS

10 A18 EXPANSION JOINT
1 1/2" = 1'-0"

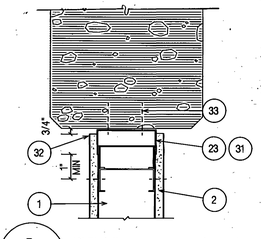

D A18 DETAIL
3" = 1'-0"

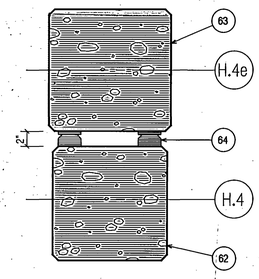

E A18 EXPANSION JOINT PLAN
1 1/2" = 1'-0"

CODED NOTES

1	3 5/8" METAL STUDS 16' O.C.: 20 GAUGE
2	5/8" TYPE "X" GYP. BRD.:
3	4" NOMINAL FIR BASE, VERIFY ON SHEET A-26
4	FOR FLOOR FINISH SEE FINISH SCHEDULE SHEET A-26
5	FOR CEILING FINISH SEE FINISH SCHEDULE SHEET A-26
6	CROSS BRACING SEE DETAIL
7	SUSPENDED ACOUSTICAL LAYIN TILE, HEIGHT MAY VARY SEE FINISH SCHEDULE A-26
9	2" SOUND BATT INSULATION:
11	7/8" FURRING STRIPS
12	THIN SET CERAMIC TILE 4 1/4" X 4 1/4" WAINSCOT ON CEMENT BOARD, FOR HEIGHT SEE INTERIOR ELEVATIONS SHEET A-25
13	SLOPE SLAB TO DRAIN SEE STRUCTURAL, THIN SET QUARRY TILE, SEE FINISH SCHEDULE SHEET A-26
14	4" QUARRY TILE COVE BASE
15	6" RUNNER
17	5/8" GYP. BRD. CEILING SUSPENDED ON 7/8" FURRING AND 1 1/2" HAT CHANNEL, HEIGHT MAY VARY, SEE FINISH SCHEDULE, SHEET A-26
18	FIRE SAFING
19	2 1/2" C-H STUDS @ 24" O.C.:
21	1" CORE BOARD
22	REFER TO PLAN FOR LOCATION RELATIVE TO THE CENTER LINE OF THE COLUMN
23	16 GAUGE TRACK PIECE
24	FILL RUNNERS WITH SOUND BATT INSULATION
32	METAL "J" MOLDING (TYPICAL)
33	ANCHOR METAL RUNNER
34	BLOCK REQUIRED MIDHT STUD WALL
35	CONC. FLOOR SLAB, SEE STRUCTURAL
36	EXISTING CONC. FLOOR SLAB
37	3 1/2" INSULATION
38	EXISTING CONC. WALL
39	ACOUSTICAL PANEL SYSTEM
40	GYPSUM BOARD METAL CORNER BEAD, TYP:
41	LIGHT VALANCE
42	EXISTING 15"X15" CONC. COL.
43	EXISTING STRUCTURE
44	EXISTING ROOF
45	REMOVE EXISTING 2" GLASS FIBER BOARD INSUL.
46	EXISTING FLOOR SLAB
47	EXISTING CONC. GRADE BEAM
48	ADD TAPERED RIGID INSUL. TO MEET PLANE OF NEW STRUCTURE
49	1" TREATED PLYWOOD
50	2x TREATED WOOD
51	WOOD CANT
52	EXPANSION JOINT, SEE SPECS.
53	NEW 16"x16" CONC. COL., SEE STRUCTURAL
54	NEW CONC. BEAM, SEE STRUCTURAL
55	2" INSUL. ON CLIPS
56	NEW SUSPENDED ROOF SLAB, SEE STRUCTURAL
57	NEW 4" RIGID INSUL.
58	NEW 4" CONC. FLOOR SLAB, SEE STRUCTURAL
59	EXPANSION JOINT
60	2" Z-CHANNELS W/ RIGID INSULATION
61	RIGID INSULATION FILLER
62	EXISTING 15" SQ. CONC. COL.
63	NEW 16" SQ. CONC. COL., SEE STRUCTURAL
64	CONT. BLACK NEOPRENE COMPRESSION SEAL
65	VALANCE WHERE APPLICABLE, SEE REFLECTED CEILING PLANS
66	CONT. PICTURE STRIP W/ METAL "J" MOLDING ABOVE AND BELOW STRIP, SEE SHEET A-5 FOR LOCATION
67	8" METAL JOISTS @ 16"O.C.
68	1 1/2" CHANNELS @ 4'-0"O.C. x 7/8" FURRING CHANNELS @ 2'-0"O.C.
69	DOUBLE 16 GAUGE UPPER TRACKS
70	CONT. 1 1/2" SOUND ATTENUATION BLANKET
71	DOUBLE 6" METAL STUDS (20 GA.) @ JAMBS ONLY (SEE STRUCTURAL), OTHERS 3 5/8" METAL STUDS (20 GA.) STAGGERED @ 12"O.C. W/ 4" BATT INSULATION
72	DOUBLE 5/8" TYPE "X" GYP. BD., JOINTS STAGGERED
73	SELF DRILLING THREATED ANCHORS TO RECEIVE RODS
74	1/4" ϕ THREATED RODS - MATT BLACK FINISH
75	LAMP BY ELECTRICAL
76	MILL ENDS FOR SQUARE CORNERS - TYPICAL
77	2"x10" VERTICAL SPACERS
78	2 - 2x FLAT SPACERS W/ 1/2" ϕ THRU VENT HOLES @ 24"O.C.
79	LEVELING NUT @ END OF ROD
80	LAG SCREWS @ ANCHOR RODS
81	SSDF 2"x14"
82	LAMP AND LOUVER BY ELECTRICAL
83	CONT. CLIP ANGLE EA. SIDE (TYPICAL)
84	3"x10"
85	3/8"x3" LAG SCREWS

AS BUILTS

0000AQA18
Utah Valley Community College Learning Resource Center - RV 90 014
Wall Sections - 7225

UTAH VALLEY COMMUNITY COLLEGE LEARNING RESOURCE CENTER/LIBRARY ADDITION

WALL SECTIONS

STRUCTURAL ENGINEER : Bsumek Mu and Associates
MECHANICAL ENGINEER : VanBoerum and Frank
ELECTRICAL ENGINEER : Becherer Nielson and Associates
LANDSCAPE ARCHITECT : MGB and Associates
INTERIOR DESIGNER : Don Harward

DRAWN BY: AN
CHECKED BY: Kep

STATE OF UTAH SCOTT, LOUIE & BROWNING P.E. 1149 ARCH. 255 ARCH. 132 Salt Lake City LICENSED ARCHITECTS & ENGINEERS

Scott, Louie and Browning
architects, engineers, planners

Utah Valley Community College
Learning Resource Center/Library Addition
Orem, Utah DFCM Project No. RV:90-014

A-18
Feb. 18, 1991

DOOR SCHEDULE

MARK	TYPE	FRM	HDW	RATING	SIZE	HEAD	JAMB	THRES	NOTES
210	C	1	1		3'-0"x7'-0"x1 3/4"	14/A-22	11/A-22	27/A-22	EXT. (WINDOW SYSTEM) ACCESS
211	B	4	9		PAIR 3'-0"x7'-0"x1 3/4"	6/A-19	10/A-22	13/A-19	DETAIL 14/A-21
212	A	1	2	20 MIN.	3'-0"x7'-0"x1 3/4"	4/A-19	4/A-19	13/A-19	ELEVATOR EQUIP. ROOM 202, REUSED, R-2
213	A	1	3		2'-10"x7'-0"x1 3/4"	4/A-19	16/A-19	14/A-19	MEN'S ROOM (REUSED DOOR), REUSED, R-1
214	A	1	2	20 MIN.	3'-0"x7'-0"x1 3/4"	4/A-19	4/A-19	12/A-19	ELEVATOR EQUIP. ROOM 205, REUSED, R-3
215	A	2	—		3'-0"x7'-0"x1 3/4"	4/A-19	3/A-19		SEMINAR (NO WORK OTHER THAN DOORS)
216	A	2	—		3'-0"x7'-0"x1 3/4"	4/A-19	3/A-19		SEMINAR (NO WORK OTHER THAN DOORS)
217	A	2	—		3'-0"x7'-0"x1 3/4"	4/A-19	3/A-19		SEMINAR (NO WORK OTHER THAN DOORS)
311	A	2	5		3'-0"x7'-0"x1 3/4"	4/A-19	3/A-19		EDIT 303
312	A	2	5		3'-0"x7'-0"x1 3/4"	4/A-19	3/A-19		EDIT 308, REVERSE SWING
313	A	2	5		3'-0"x7'-0"x1 3/4"	4/A-19	3/A-19		WINDOW WALL Ja GRAPHICS 304
314	A	2	5		3'-0"x7'-0"x1 3/4"	4/A-19	3/A-19, 4/A-19		CONTROL 305, REUSED, R-7
315	A	2	5		3'-0"x7'-0"x1 3/4"	4/A-19	3/A-19, 4/A-19		OFFICE 306, REUSED, R-8
316	A	2	5		3'-0"x7'-0"x1 3/4"	4/A-19	3/A-19, 4/A-19		OFFICE 309
317	A	2	5		3'-0"x7'-0"x1 3/4"	4/A-19	3/A-19, 4/A-19		OFFICE 310
318	A	2	5		3'-0"x7'-0"x1 3/4"	4/A-19	3/A-19, 4/A-19		OFFICE 311, REUSED, R-9
319	A	1	5		3'-6"x7'-0"x1 3/4"	4/A-19	4/A-19		312, REUSED, R-11
320	A	1	6		3'-0"x7'-0"x1 3/4"	4/A-19	3/A-19, 4/A-19		313, REVERSE SWING
321	A	1	5		3'-0"x7'-0"x1 3/4"	16/A-19	16/A-19	14/A-19	MEN 319, REUSED, R-19
322	A	3	5		3'-0"x7'-0"x 1 3/4"	4/A-19	3/A-19		FILM/AV.
323	B	4	12		PAIR 3'-0"x 7'-0"x 1 3/4"	14/A-22	11/A-22	10/A-22	WINDOW SYSTEM AT STAIRWAY EXT.
324	A	1	5		3'-0"x 7'-0"x 1 3/4"	4/A-19	4/A-19		SERVICE
410	A	1	4		3'-0"x7'-0"x1 3/4"	4/A-19	4/A-19	12/A-19	VESTIBULE 401
411	A	1	6		3'-0"x7'-0"x1 3/4"	4/A-19	4/A-19		RECEIVING 402, REUSED, R-20
412	A	1	6		3'-0"x7'-0"x1 3/4"	4/A-19	4/A-19		LANGUAGE LAB 408
413	A	1	6		3'-0"x7'-0"x1 3/4"	4/A-19	4/A-19		CONFERENCE, REUSED, R-22
414	E	1	5		3'-0"x5'-0"x1 3/4"	—	12/A-22 SIM.		SEC/COPY 405 (SMALL DOOR IN H.M. WALL)
415	D	3	5		3'-0"x7'-0"x1 3/4"	3/A-19	3/A-19		CONTROL 407 (DUTCH DOOR)
416	A	1	6		3'-0"x7'-0"x1 3/4"	4/A-19	4/A-19		LANGUAGE LAB 408
417	A	1	7		3'-0"x7'-0"x1 3/4"	16/A-19	16/A-19	14/A-19	WOMEN FACULTY 409
418	A	1	3		3'-0"x7'-0"x1 3/4"	16/A-19	16/A-19	14/A-19	WOMEN 411
419	A	1	3		3'-0"x7'-0"x1 3/4"	16/A-19	16/A-19	14/A-19	MEN 412
420	C	3	6		3'-0"x7'-0"x1 3/4"	13/A-22	12/A-22		PERIODICAL 414 SEE H.M. WINDOW Q
421	A	3	5		3'-0"x7'-0"x1 3/4"	13/A-22	12/A-22		GS 416 SEE H.M. WINDOW Na
422	A	3	5		3'-0"x7'-0"x1 3/4"	13/A-22	12/A-22		GS 417 SEE H.M. WINDOW N
423	A	3	8		3'-0"x7'-0"x1 3/4"	13/A-22	12/A-22		OFFICE 442
424	A	3	5		3'-0"x7'-0"x1 3/4"	13/A-22	12/A-22		GS 419
425	A	3	5		3'-0"x7'-0"x1 3/4"	13/A-22	12/A-22		GS 420
426	A	3	5		3'-0"x7'-0"x1 3/4"	13/A-22	12/A-22		GS 424
427	A	3	5		3'-0"x7'-0"x1 3/4"	13/A-22	12/A-22		GS 423
428	A	3	5		3'-0"x7'-0"x1 3/4"	13/A-22	12/A-22		GS 425
429	A	3	5		3'-0"x7'-0"x1 3/4"	13/A-22	12/A-22		GS 426
430	A	3	6		3'-0"x7'-0"x1 3/4"	13/A-22	12/A-22		SEMINAR 427
431	A	3	6		3'-0"x7'-0"x1 3/4"	13/A-22	12/A-22		SEMINAR 431
432	B	4	9		PAIR 3'-0"x7'-0"x1 3/4"	14/A-22	11/A-22	12/A-19	EXT. WINDOW WALL
433	A	3	6		3'-0"x7'-0"x1 3/4"	13/A-22	12/A-22		SEMINAR 435 SEE H.M. WINDOW Ja
434	A	3	6		3'-0"x7'-0"x1 3/4"	13/A-22	12/A-22		SEMINAR 436 SEE H.M. WINDOW J
435	A	3	6		3'-0"x7'-0"x1 3/4"	13/A-22	12/A-22		SEMINAR 437 SEE H.M. WINDOW H
436	B	4	9		PAIR 3'-0"x7'-0"x1 3/4"	14/A-22	11/A-22	12/A-19	EXT. WINDOW WALL
437	B	4	9		PAIR 3'-0"x7'-0"x1 3/4"	14/A-22	11/A-22	12/A-19	EXT. WINDOW WALL
438	A	1	2	20 MIN.	3'-0"x7'-0"x1 3/4"	7/A-19	7/A-19	13/A-19	ELECTRICAL ROOM 438, 6" STUD WALL
439	A	1	6	20 MIN.	3'-0"x7'-0"x1 3/4"	4/A-19	4/A-19		MECHANICAL 440
440	A	1	10	20 MIN.	3'-0"x7'-0"x1 3/4"	1/A-19	1/A-19	12/A-19	EXTERIOR
441	E	—	11		1'-6"x2'-6"x1 3/4"	5/A-19	5/A-19		ACCESS DOOR TO PLUMBING, FROM MEN'S 412
442	A	3	8		3'-0"x7'-0"x 1 3/4"	13/A-22	12/A-22		RARE BOOK COLLECTION
443	A	1	6	20 MIN.	3'-0"x7'-0"x1 3/4"	4/A-19	4/A-19		
444	G	—	—		30'-0"x10'-0"	17/A-19	18/A-19		FIELD VERIFY OPENING/FIELD VERIFY W/ARCH.

✳ (R-) REUSED DOOR PAINTED TO MATCH

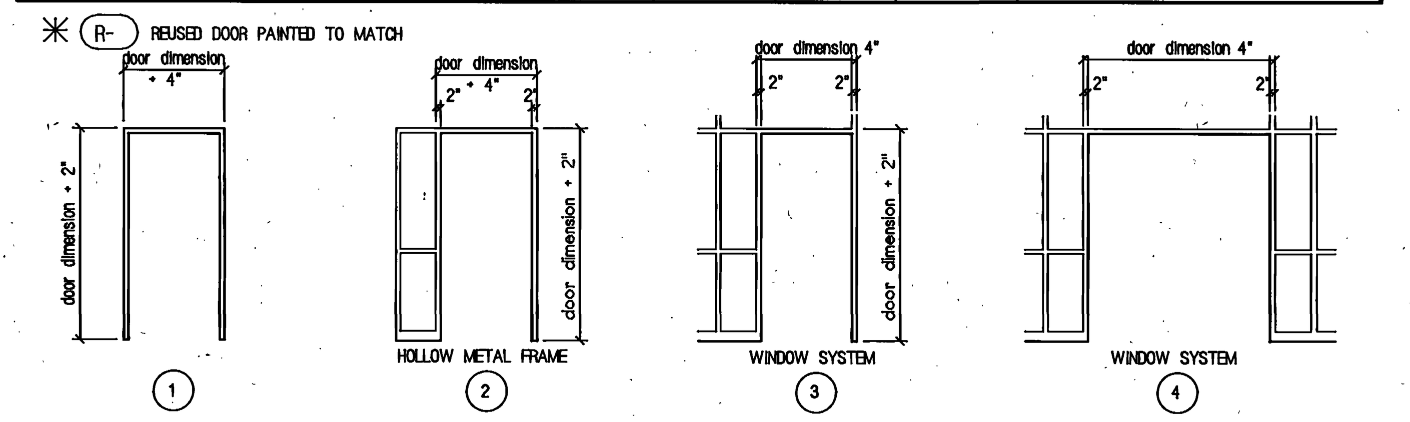

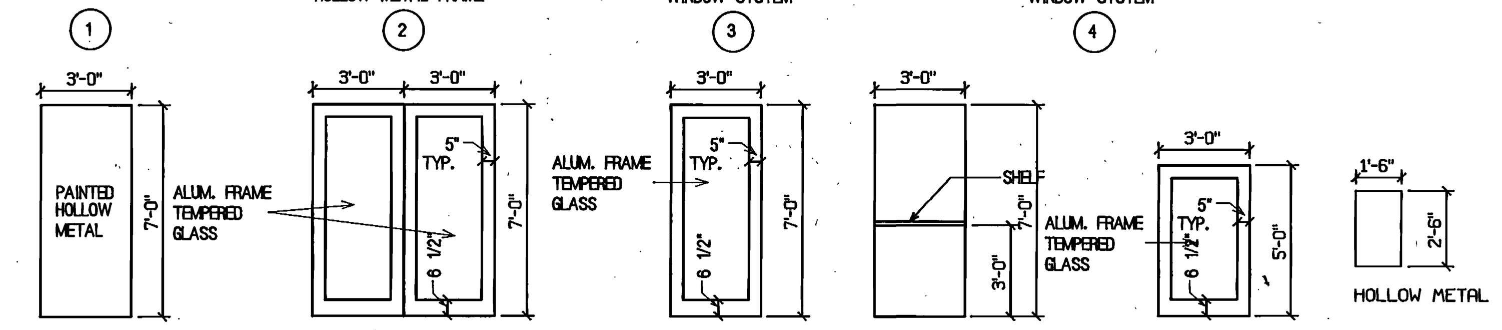

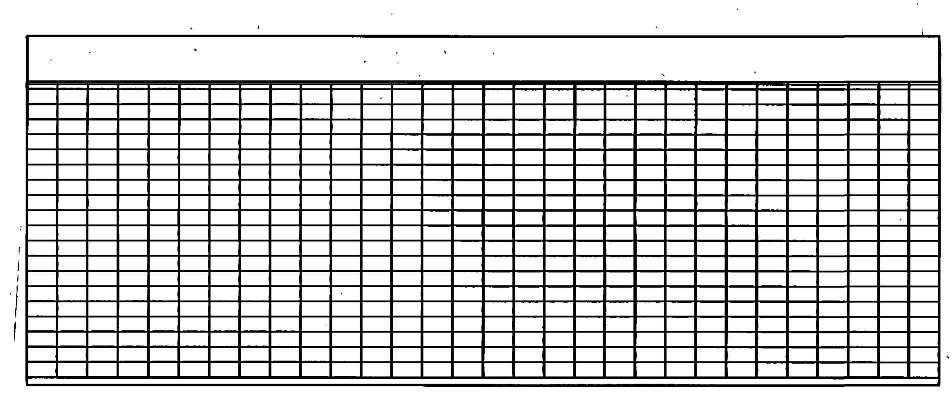

G ROLL-UP GRILLE

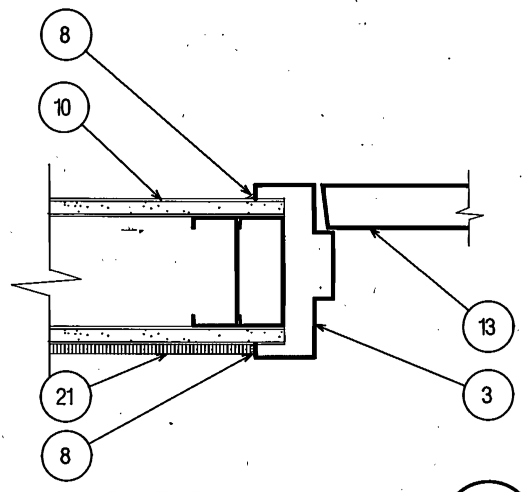

JAMB/HEAD 16/A19
3"-1'-0"

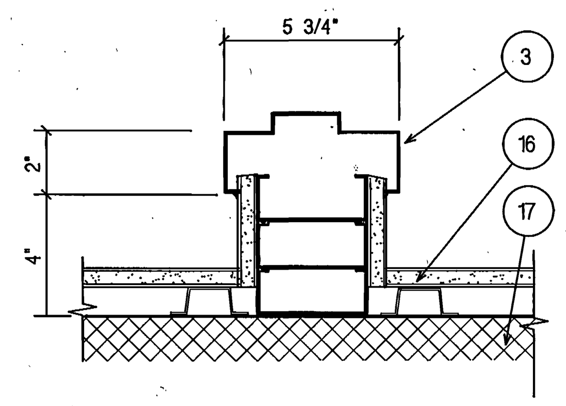

Jamb 11/A19
3"-1'-0"

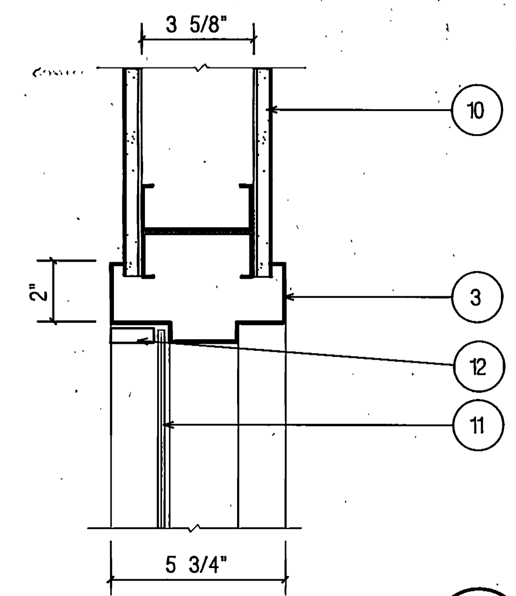

Head 6/A19
3"-1'-0"

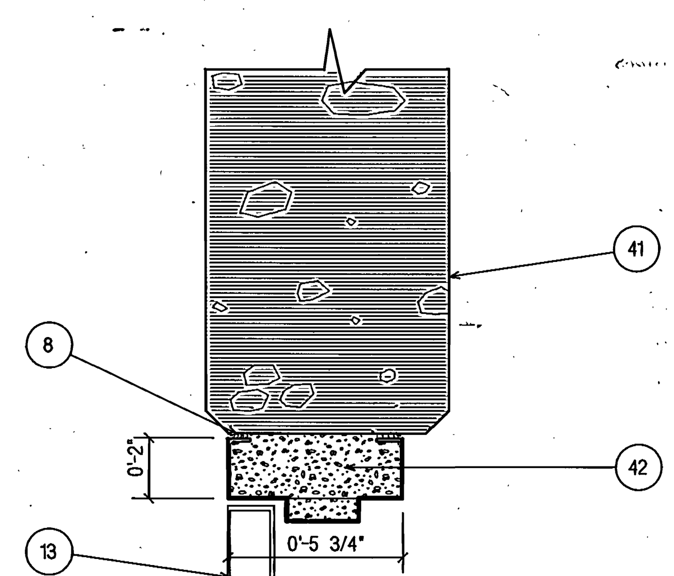

HEAD DETAIL 1/A19
3" = 1'-0"

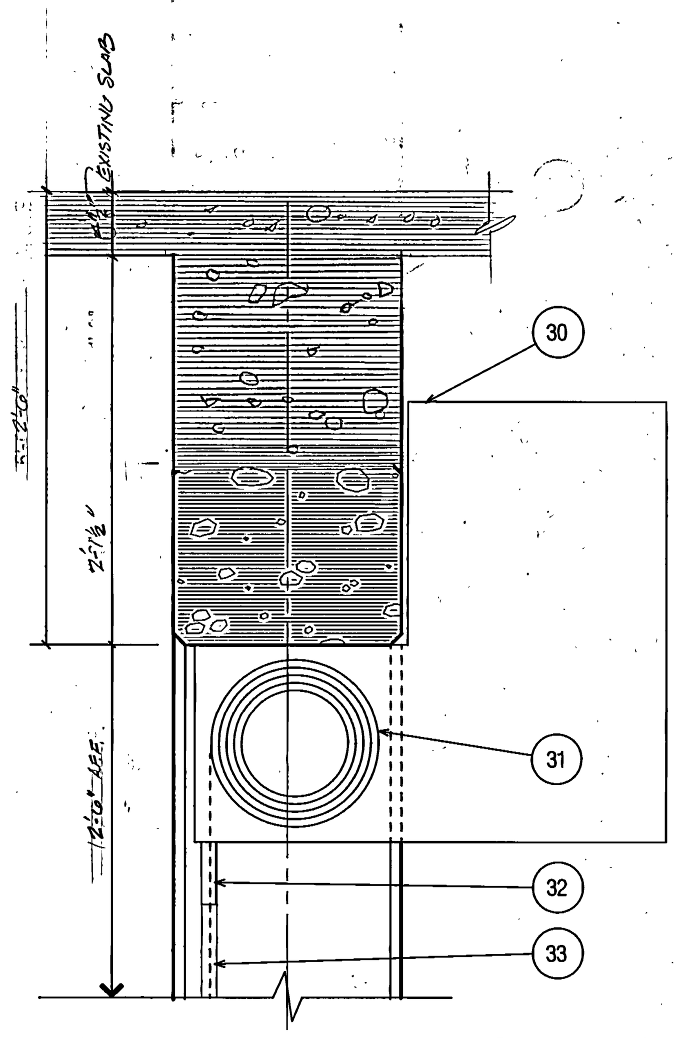

HEAD/ROLLING GRILLE 17/A19
1 1/2" = 1'-0"

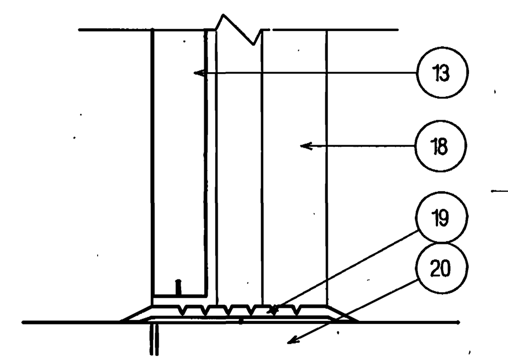

THRESHOLD 12/A19
3"-1'-0"

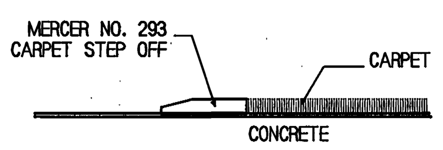

THRESHOLD 13/A19
3"-1'-0"

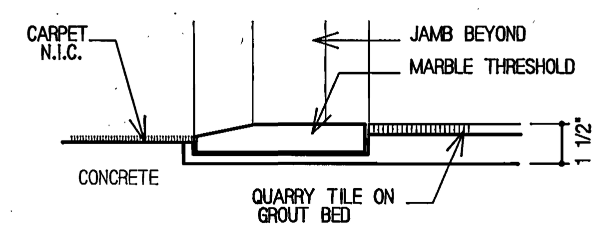

THRESHOLD 14/A19
3" = 1'-0"

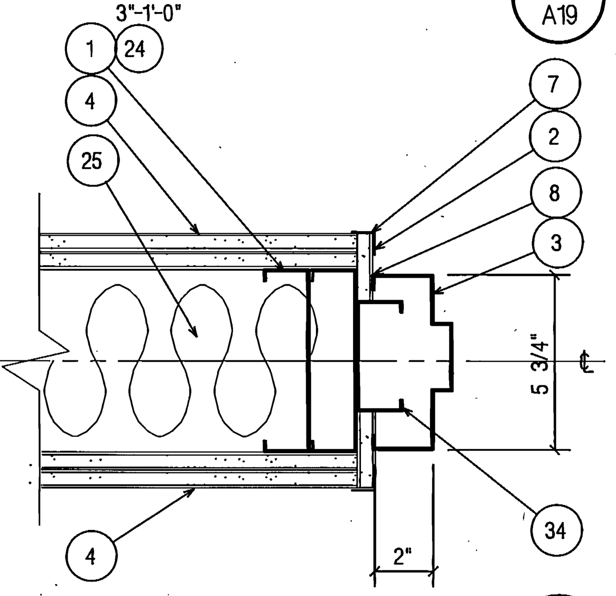

SOUND WALL HEAD/JAMB 7/A19
3"-1'-0"

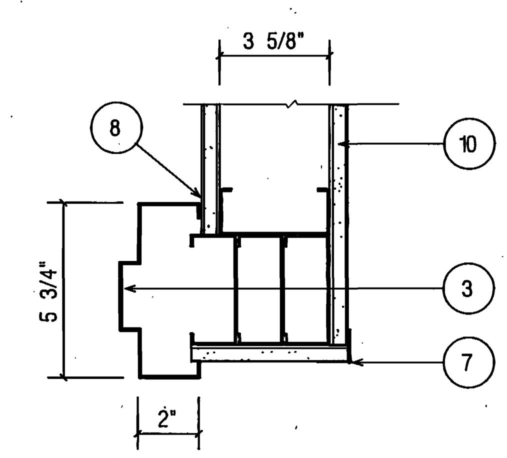

Jamb 2/A19
3"-1'-0"

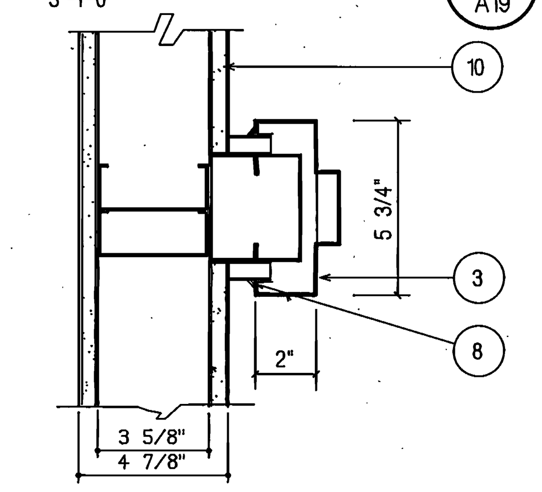

Jamb 8/A19
3"-1'-0"

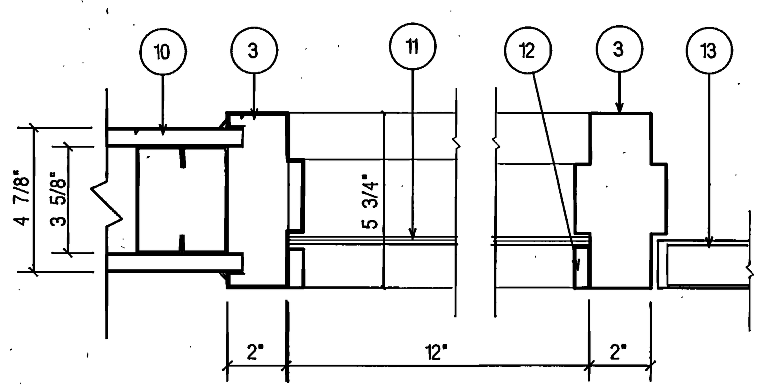

Jamb and Glazing Detail 3/A19
3":1'-0"

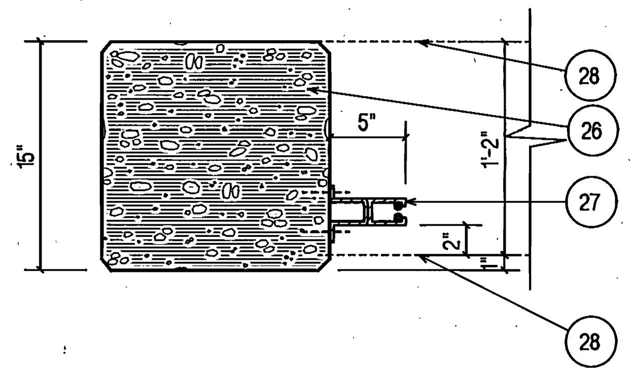

JAMB/ROLLING GRILLE 18/A19
1 1/2" = 1'-0"

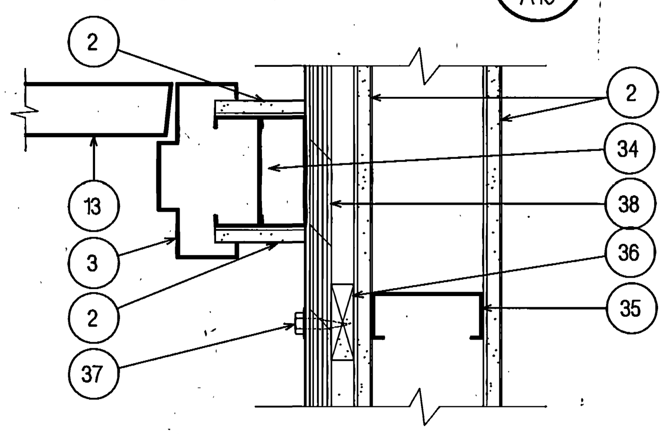

ELEVATOR JAMB 15/A19
3"-1'-0"

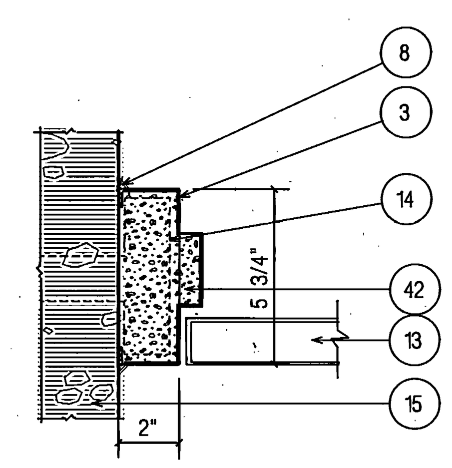

Jamb 9/A19
3"-1'-0"

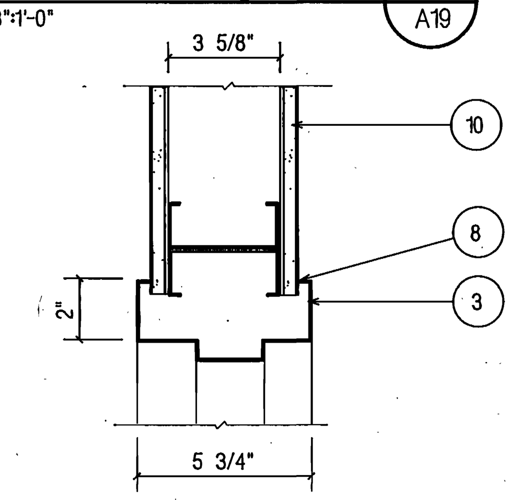

Head / Jamb 4/A19
3" : 1'-0"

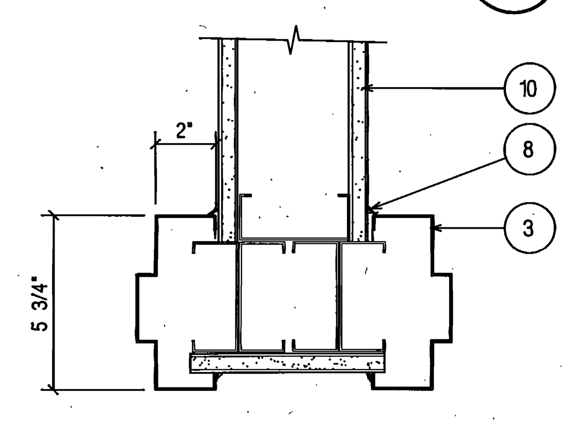

Jamb 10/A19
3"-1'-0"

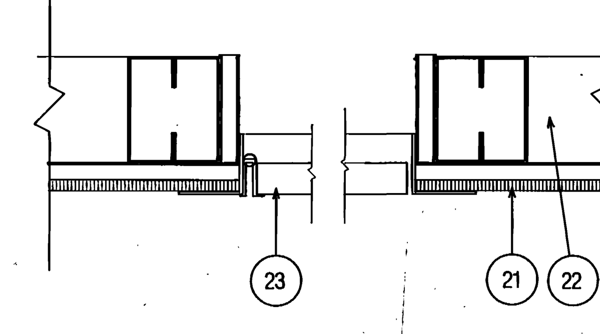

JAMB 5/A19
3" = 1'-0"

CODED NOTES

1. 6" MTL. STUDS @ 16"o.c.
2. 5/8" GYP. BRD.
3. HOLOW MTL. FRAME PAINTED
4. TWO LAYERS 5/8" TYPE "X" GYP. BD. SOUND WALL
5. 1/2" EXTERIOR GYP. SHEATHING
6. EXTERIOR MASONRY
7. MTL. CORNER BEAD (TYPICAL)
8. SEALANT CONT. EXTERIOR AND INTERIOR (TYPICAL)
9. MASONRY TIE AS PER STRUCT.
10. 5/8" GYP. BD. ON 3 5/8" MTL. STUDS @ 16"o.c.
11. 1/4" WIRE SAFETY GLASS
12. MTL. STOP SET FLUSH W/ FRAME
13. DOOR SEE DOOR SCHEDULE FOR TYPE AND MATERIAL
14. "T" ANCHOR - 3 PER JAMB SIDE
15. CONCRETE COLUMN
16. 5/8" GYP. BD. ON 7/8" MTL. FURRING CHANNELS @ 16"o.c.
17. 8" RCMU
18. HOLLOW MTL. JAMB BEYOND
19. ALUM. THRESHOLD SET IN CONT. SEALANT BED (TYPICAL)
20. CONC. FLOOR SLAB
21. THIN SET CERAMIC TILE ON 5/8"CEMENT BD., SEE SPEC.
22. 3 5/8" MTL. STUDS @ 16" o.c.
23. ACCESS DOOR AND INTEGRAL FRAME AND LOCK
24. 6" MET. STUD WALL, SEE STRUCTURAL DET. 9/S-8
25. 4" BATT INSULATION
26. EXISTING CONC. COLUMN
27. GUIDE FOR ROLLING GRILLE MOUNTED TO EXISTING CONC. COLUMN
28. LOCATION OF ROLLING GRILLE HOOD ABOVE FLUSH W/ BACK OF COLUMN
29. EXISTING CONC. BEAM
30. MOTOR FOR ROLLING GRILLE MOUNTED ON BACK OF HOOD
31. HOOD MOUNTED TO BOTTOM OF CONC. BEAM FLUSH W/ BACK
32. BOTTOM BAR
33. GUIDE TRACKS FOR ROLLING GRILLE
34. 3 5/8" MTL. STUDS (20 GA.)
35. 3 1/2" MTL. STUDS (20 GA.) @ 16"O.C.
36. 1"x3" FURRING @ ALL SCREW LOCATIONS
37. 3/8" ϕ SCREW W/HEX HEAD AND WASHER
38. 20 GA. SHEET MTL. LAMINATED TO 3/4" PLYWOOD
39. HEAD CONDITION 4" TYPICAL
40. 5/8" GYP. BD. ON 3 5/8" MTL. STUDS AT 16" O.C. (20 GA.)- TYP. SOFFIT WHERE APPL.
41. CONC. WALL, SEE STRUCTURAL
42. GROUT JAMB SOLID

0000AQA19
Utah Valley Community College Learning Resource Center - RV 90-014
Door Schedule and Details - 7226

AS BUILTS

UTAH VALLEY COMMUNITY COLLEGE LEARNING RESOURCE CENTER/LIBRARY ADDITION

STRUCTURAL ENGINEER : Bsumek Mu and Associates
MECHANICAL ENGINEER : VanBoerum and Frank
ELECTRICAL ENGINEER : Becherer Nielson and Associates
LANDSCAPE ARCHITECT : MGB and Associates
INTERIOR DESIGNER : Don Harward

DRAWN BY: AN
CHECKED BY: KRP

STATE OF UTAH · SCOTT, LOUIE & BROWNING · P.E. 1148 · ARCH. 230 · ARCH. 432 · Salt Lake City · LICENSED ARCHITECTS & ENGINEERS

Scott, Louie and Browning
architects, engineers, planners

DOOR SCHEDULE/DETAILS

Utah Valley Community College
Learning Resource Center/Library Addition
Orem, Utah DFCM Project No. RV:90-014

A-19
FEB. 18, 1991

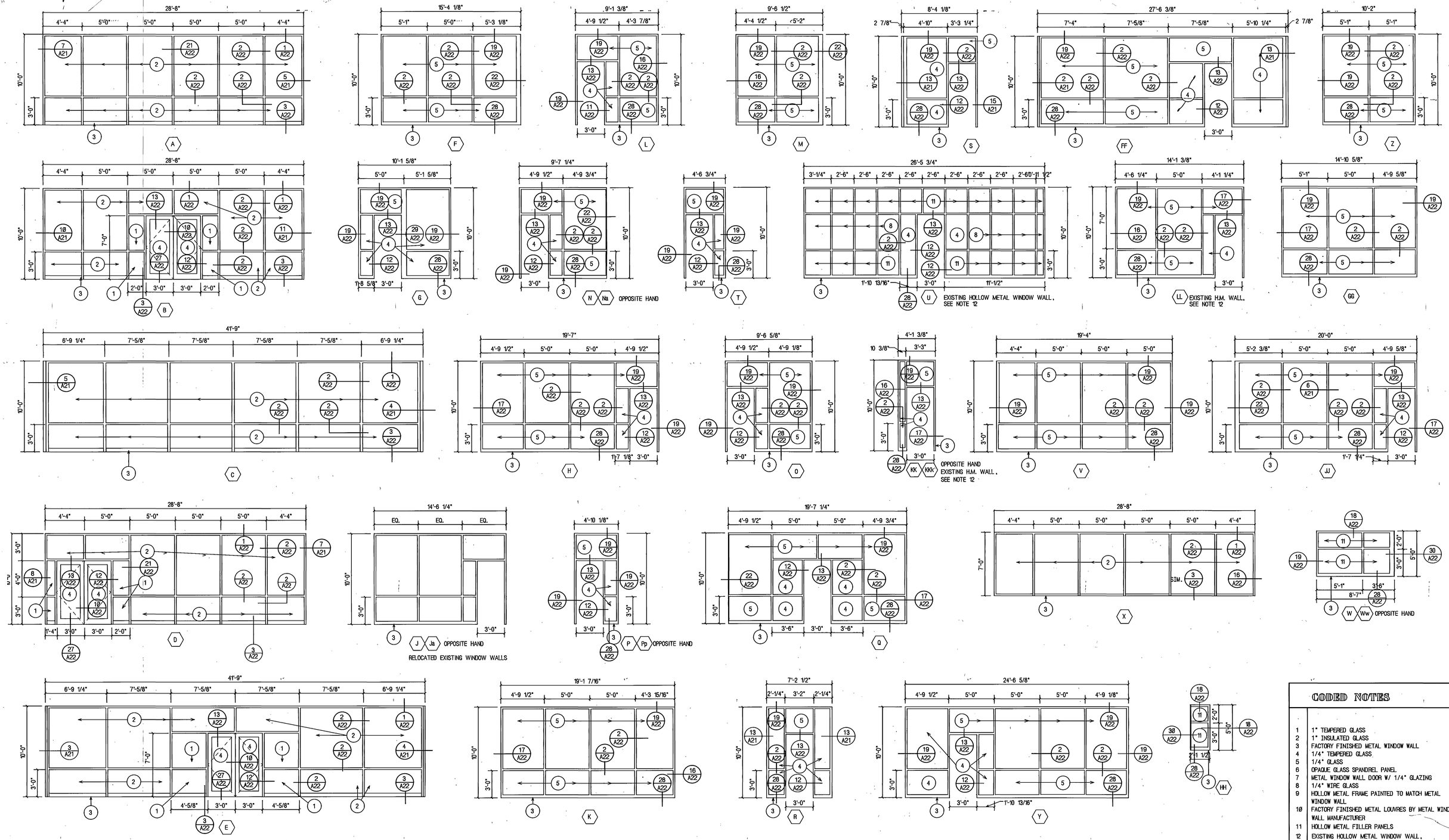

WINDOW SCHEDULE

SCALE 1/4" = 1'-0"

CODED NOTES

1	1" TEMPERED GLASS
2	1" INSULATED GLASS
3	FACTORY FINISHED METAL WINDOW WALL
4	1/4" TEMPERED GLASS
5	1/4" GLASS
6	OPAQUE GLASS SPANDREL PANEL
7	METAL WINDOW WALL DOOR W/ 1/4" GLAZING
8	1/4" WIRE GLASS
9	HOLLOW METAL FRAME PAINTED TO MATCH METAL WINDOW WALL
10	FACTORY FINISHED METAL LOUVRES BY METAL WINDOW WALL MANUFACTURER
11	HOLLOW METAL FILLER PANELS
12	EXISTING HOLLOW METAL WINDOW WALL, REMODEL W/NEW DOOR AND SIDELIGHT BEING ADDED.

NOTE: FIELD VARIFY ALL OPENING SIZES

0000AQA20
Utah Valley Community College, Learning Resource Center -
RV 90-014
Window Schedule - 7227

AS BUILTS

UTAH VALLEY COMMUNITY COLLEGE LEARNING RESOURCE CENTER/LIBRARY ADDITION

L ENGINEER	: Bsumek Mu and Associates
MECHANICAL ENGINEER	: VanBoerum and Frank
ELECTRICAL ENGINEER	: Becherer Nielson and Associates
LANDSCAPE ARCHITECT	: MGB and Associates
INTERIOR DESIGNER	: Don Harward

DRAWN BY: AN
CHECKED BY: KKP

STATE OF UTAH SCOTT, LOUIE, BROWNING, INC. P.E. 1165 ARCH. 259 ARCH. 432 LICENSED ARCHITECTS & ENGINEERS Salt Lake City

Scott, Louie and Browning
architects, engineers, planners

Utah Valley Community College
Learning Resource Center/Library Addition
Orem, Utah DFCM Project No. RV:90-014

WINDOW SCHEDULE

A-20

Feb. 18, 1997

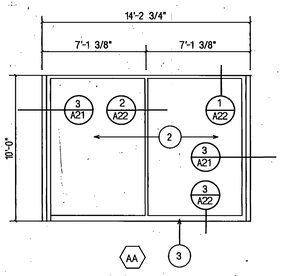

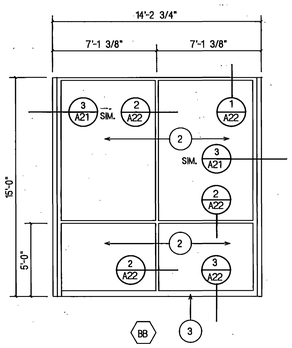

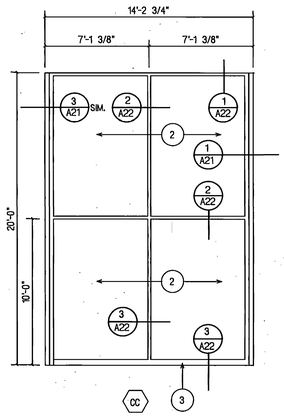

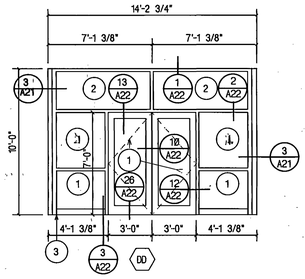

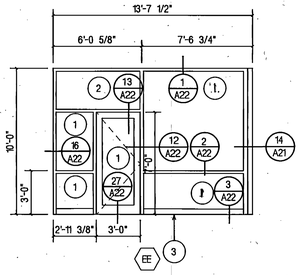

CODED NOTES (WINDOW WALLS)

1 1" TEMPERED GLASS
2 1" INSULATED GLASS
3 FACTORY FINISHED METAL WINDOW WALL
4 OPAQUE GLASS SPANDREL PANEL

NOTE: FIELD VARIFY ALL OPENING SIZES

W I N D O W S C H E D U L E

SCALE 1/4" : 1'-0"

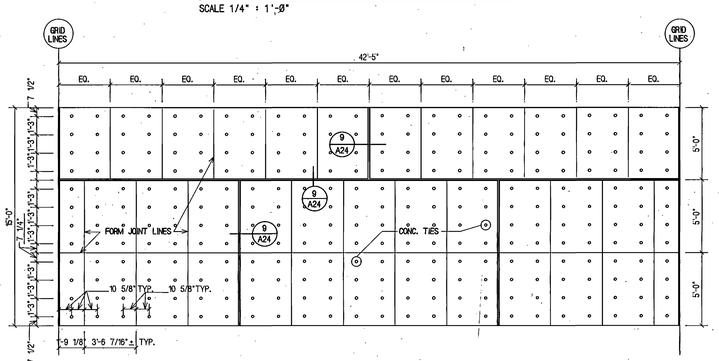

TYPICAL DIAGONAL CONCRETE WALL

SCALE 1/4" : 1'-0"

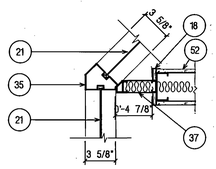

JAMB DETAIL 13 A21
1 1/2" : 1'-0"

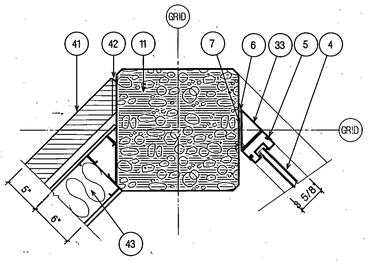

JAMB DETAIL 9 A21
1 1/2" : 1'-0"

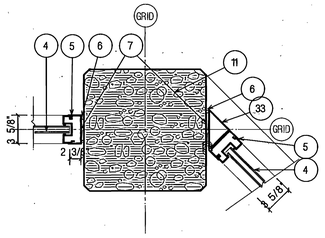

JAMB DETAIL 5 A21
1 1/2" : 1'-0"

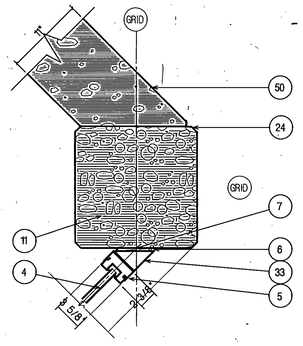

JAMB DETAIL 1 A21
1 1/2" : 1'-0"

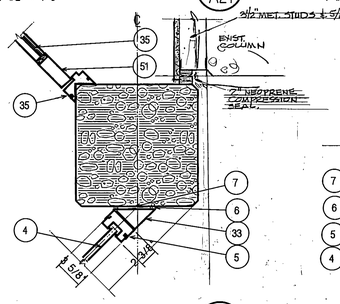

JAMB DETAIL 14 A21
1 1/2" : 1'-0"

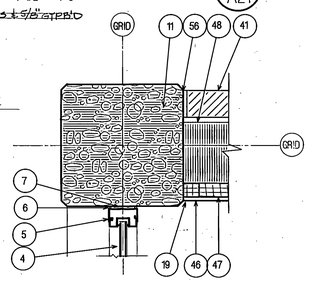

JAMB DETAIL 10 A21
1 1/2" : 1'-0"

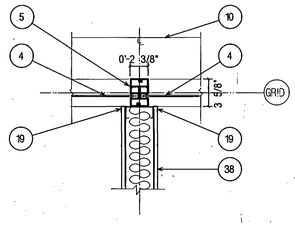

MULLION DETAIL 6 A21
1 1/2" : 1'-0"

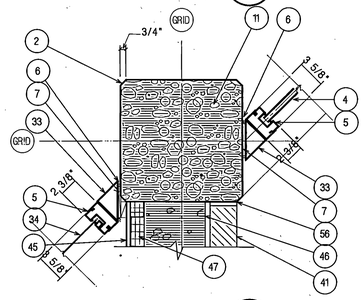

JAMB DETAIL 2 A21
1 1/2" : 1'-0"

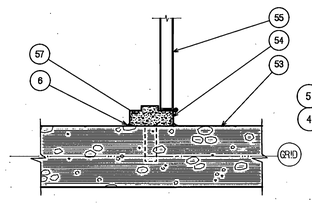

JAMB DETAIL 15 A21
1 1/2" : 1'-0"

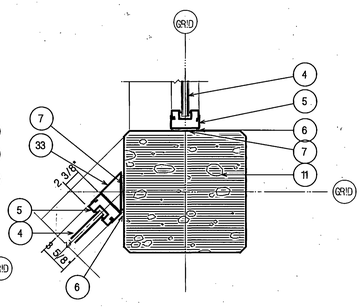

JAMB DETAIL 11 A21
1 1/2" : 1'-0"

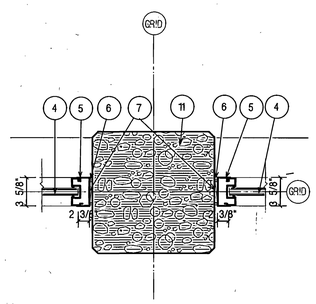

JAMB DETAIL 7 A21
1 1/2" : 1'-0"

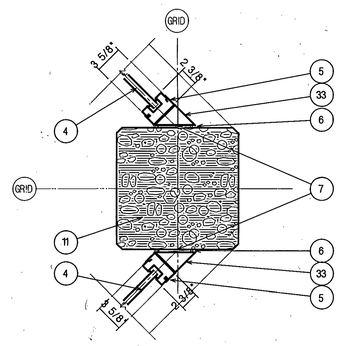

JAMB DETAIL 3 A21
1 1/2" : 1'-0"

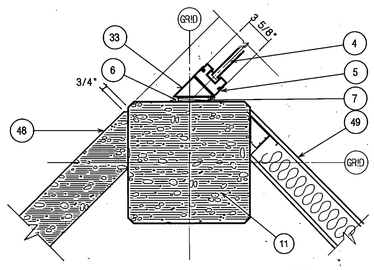

JAMB DETAIL 12 A21
1 1/2" : 1'-0"

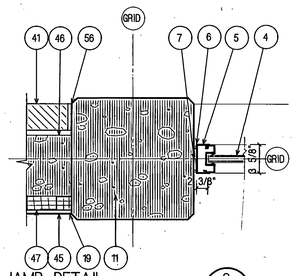

JAMB DETAIL 8 A21
1 1/2" : 1'-0"

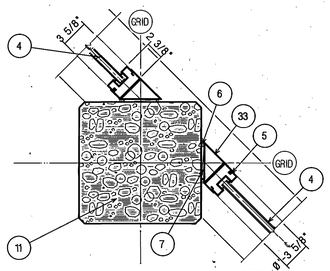

JAMB DETAIL 4 A21
1 1/2" : 1'-0"

CODED NOTES

1 CONCRETE BEAM WIDTH VARIES SEE STRUCT.
2 3/4" CHAMFER TYPICAL
3 FORMED RECESSED DRIP TYPICAL FOR ALL EXTERIOR BEAMS
4 1" INSULATED GLAZING TEMPERED WHERE APPLICABLE.
5 METAL WINDOW WALL
6 SEALANT CONT. BOTH SIDES OF FRAME TYPICAL
7 WOOD SHIMS AS REQUIRED
8 CONCRETE COLUMN OR WALL BEYOND
9 CONCRETE FOUNDATION WALL AND FLOOR SLAB
10 CONCRETE SILL BELOW SLOPED 3/4" AT ALL EDGE BEAMS
11 CONCRETE COLUMN TYPICAL
12 METAL WINDOW WALL SILL SET IN CONT. BED OF SEALANT
13 LINE OF MASONRY WALL BELOW WHERE APPLICABLE
14 LINE OF INTERIOR SILL WHERE APPLICABLE
15 OPAQUE GLASS SPANEDREL PANEL
16 3 5/8" MTL. STUDS @ 16"o.c. W/ 5/8" GYP. BRD. ON INSIDE W/ BATT INSULATION BETWEEN STUDS.
17 1 x 4 CLEAR FURR BASE
18 MTL. CORNER BEAD
19 MTL. "J" MOLD (TYPICAL)
20 3/4" PLYWOOD SILL W/ 1x2 NOSING W/ BETWEEN SILL AND MUNTIN .
21 1/4" GLASS TEMPERED WHERE APPLICABLE
22 METAL DOOR FRAME
23 METAL REMOVABLE MULLION
24 5/8" INSULATED GLASS TEMPERED WHERE APPLICABLE
25 ALUMINUM THRESHOLD SET IN CONT. BED OF SEALANT
26 CONCRETE FLOOR SLAB
27 PRECAST CONCRETE BLOCK OR FOUNDATION WALL AS PER APPLICATION
28 WATERPROOF MEMBRANE
29 1/4" ASPHALT IMPREGNATED PROTECTION BOARD (INORGANIC)
30 1 1/2" ROLLED BITUMINOUS SETTING BED (VARIES IN THICKNESS)
31 EXPANSION JOINT AND SEALANT
32 1 1/2" ASPHALT PAVER
33 METAL FILLER
34 1/4" GLASS
35 HOLLOW METAL FRAME
36 METAL STUD ANCHORED TO COLUMN
37 16 ga. METAL COVER PREFINISHED TO MATCH WINDOW WALL. COVER BY WINDOW MNFR. ATTACH MTL. STUD W/ COUNTER SUNK FLAT HEAD SCREWS FILL AND GRIND SMOOTH ALL EXPOSED SCREWS.
38 INTERIOR PARTITION WALL SEE WALL TYPES
39 3 5/8" MTL. STUDS @ 16"o.c. W/ 5/8" GYP. BRD. EA. SIDE
40 METAL GUARD RAIL SEE HANDRAIL DETAILS
41 EXTERIOR MASONRY
42 CHAMFER EDGE OF MASONRY W/SEALANT CONT. ALONG EDGE OF MASONRY AND COLUMN
43 6" MTL. STUDS @ 16"o.c. W/ BATT INSULATION BETWEEN STUDS W/ 5/8" GYP. BRD. ON INTERIOR W/ 1/2" EXTERIOR SHEATHING ON OTHER SIDE
44 TS 2x4x1/4 PAINTED TO MATCH WINDOW WALL
45 5/8" GYP. BD.
46 8" CONC. SHEAR WALL, SEE STRUCTURAL
47 2" Z CHANNELS W/2" RIGID INSULATION
48 8" EXTEROIR CONC. WALL, SEE WALL SECTIONS
49 INTERIOR WALL, SEE WALL SECTIONS
50 CONC. WALL, SEE STRUCTURAL
51 METAL DOOR FRAME
52 INTERIOR PARTITION WALL, SEE WALL TYPES SHEET A-18
53 8" CONC. SHEAR WALL, SEE WALL SECTIONS
54 METAL DOOR FRAME GROUTED SOLID
55 METAL DOOR, SEE DOOR SCHEDULE, SHEET A-19
56 RACK AND CAULK JOINTS AT COLUMNS (TYPICAL)
57 "T" ANCHOR - 3 PER JAMB SIDE

0000AQA21
Utah Valley Community College, Learning Resource Center - RV.90-014
Window Schedule and Glazing Details - 7228

AS BUILTS

UTAH VALLEY COMMUNITY COLLEGE LEARNING RESOURCE CENTER/LIBRARY ADDITION

WINDOW SCHEDULE/GLAZING DETAILS

STRUCTURAL ENGINEER : Bsumek Mu and Associates
MECHANICAL ENGINEER : VanBoerum and Frank
ELECTRICAL ENGINEER : Becherer Nielson and Associates
LANDSCAPE ARCHITECT : MGB and Associates
INTERIOR DESIGNER : Don Harward

DRAWN BY: AJ
CHECKED BY: KEP

STATE OF UTAH — SCOTT, LOUIE & BROWNING — P.E. 1166 ARCH. 339 ARCH. 492 — Salt Lake City — LICENSED ARCHITECTS & ENGINEERS

Scott, Louie and Browning
architects, engineers, planners

Utah Valley Community College
Learning Resource Center/Library Addition
Orem, Utah DFCM Project No. RV-90-014

A-21
Feb. 18, 1991

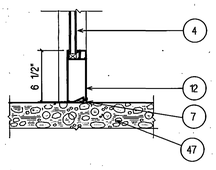

SILL DETAIL 26/A22
1 1/2" : 1'-0"

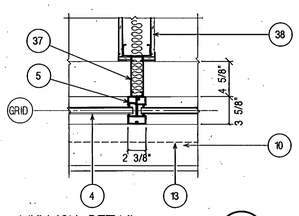

MULLION DETAIL 21/A22
1 1/2" : 1'-0"

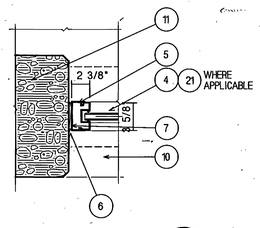

JAMB DETAIL 16/A2
1 1/2" : 1'-0"

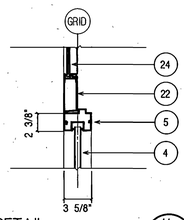

JAMB DETAIL 11/A22
1 1/2" : 1'-0"

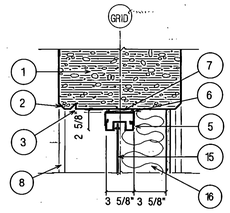

HEAD DETAIL 6/A22
1 1/2" : 1'-0"

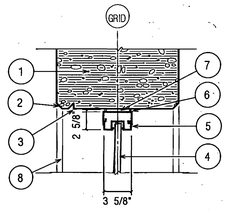

HEAD DETAIL 1/A22
1 1/2" : 1'-0"

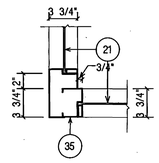

1 1/2" : 1'-0"
27/A22

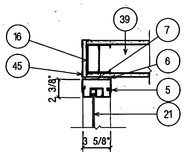

JAMB DETAIL 22/A22
1 1/2" : 1'-0"

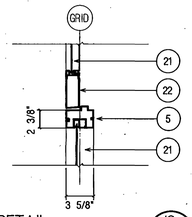

JAMB DETAIL 17/A22
1 1/2" : 1'-0"

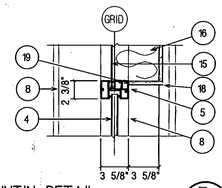

JAMB DETAIL 12/A22
1 1/2" : 1'-0"

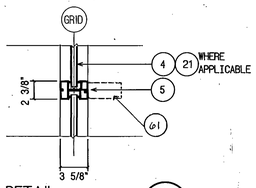

MUNTIN DETAIL 2/A22
1 1/2" : 1'-0"

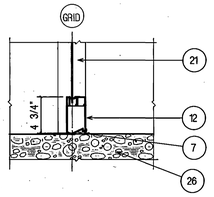

SILL DETAIL 28/A22
1 1/2" : 1'-0"

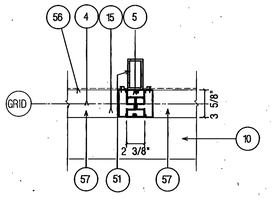

MULLION DETAIL 23/A22
1 1/2" : 1'-0"

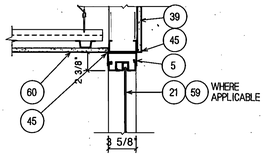

JAMB DETAIL/HEAD SIM. 18/A22
1 1/2" : 1'-0"

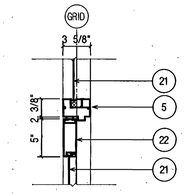

HEAD DETAIL 13/A22
1 1/2" : 1'-0"

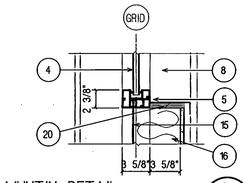

MUNTIN DETAIL 8/A22
1 1/2" : 1'-0"

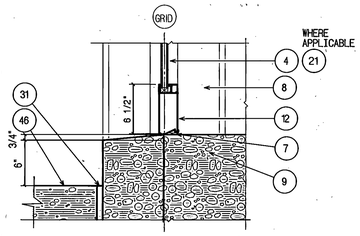

SILL DETAIL 3/A22
1 1/2" : 1'-0"

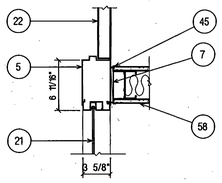

JAMB DETAIL 29/A22
1 1/2" : 1'-0"

1 1/2" : 1'-0"
24/A22

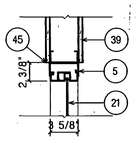

JAMB DETAIL / HEAD SIM. 19/A22
1 1/2" : 1'-0"

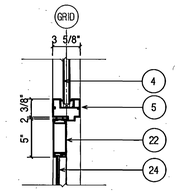

HEAD DETAIL 14/A22
1 1/2" : 1'-0"

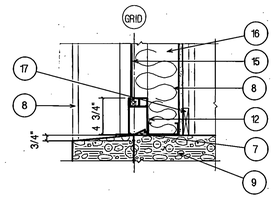

SILL DETAIL 9/A22
1 1/2" : 1'-0"

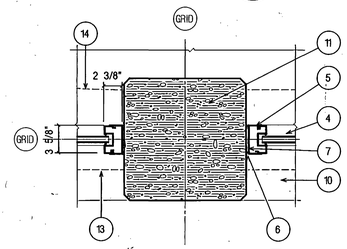

JAMB DETAIL 4/A22
1 1/2" : 1'-0"

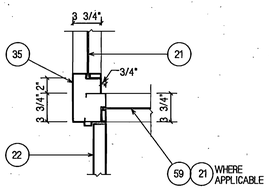

JAMB DETAIL 30/A22
1 1/2" : 1'-0"

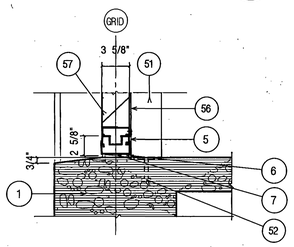

SILL DETAIL 25/A22
1 1/2" : 1'-0"

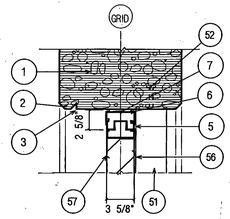

HEAD DETAIL, JAMB SIM. 20/A22
1 1/2" : 1'-0"

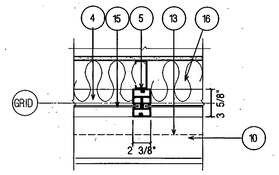

MULLION DETAIL 15/A22
1 1/2" : 1'-0"

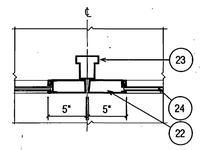

JAMB DETAIL 10/A22
1 1/2" : 1'-0"

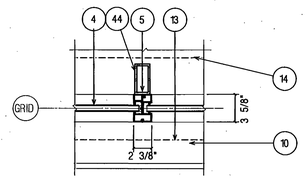

MULLION DETAIL 5/A22
1 1/2" : 1'-0"

CODED NOTES

1 CONCRETE BEAM WIDTH VARIES SEE STRUCT.
2 3/4" CHAMFER TYPICAL
3 FORMED RECESSED DRIP TYPICAL FOR ALL EXTERIOR BEAMS
4 1" INSULATED GLAZING TEMPERED WHERE APPLICABLE.
5 METAL WINDOW WALL
6 SEALANT CONT. BOTH SIDES OF FRAME TYPICAL
7 WOOD SHIMS AS REQUIRED
8 CONCRETE COLUMN OR WALL BEYOND
9 CONCRETE FOUNDATION WALL AND FLOOR SLAB
10 CONCRETE SILL BELOW SLOPED 3/4" AT ALL EDGE BEAMS
11 CONCRETE COLUMN TYPICAL, OR CONC. WALL WHERE APPLICABLE
12 METAL WINDOW WALL SILL SET IN CONT. BED OF SEALANT
13 LINE OF MASONRY WALL BELOW WHERE APPICABLE
14 LINE OF INTERIOR SILL WHERE APPLICABLE
15 OPAQUE GLASS SPANEDREL PANEL
16 3 5/8" MTL. STUDS @ 16"o.c. W/ 5/8" GYP. BRD. ON INSIDE W/ BATT INSULATION BETWEEN STUDS.
17 1 x 4 CLEAR FURR BASE
18 MTL. CORNER BEAD
19 MTL. "J" MOLD
20 3/4" PLYWOOD SILL W/ 1x2 NOSING W/ BETWEEN SILL AND MUNTIN .
21 1/4" GLASS TEMPERED WHERE APPLICABLE
22 METAL DOOR AND FRAME, SEE DOOR SCHEDULE SHEET A-19
23 METAL REMOVABLE MULLION
24 5/8" INSULATED GLASS TEMPERED WHERE APPLICABLE
25 ALUMINUM THRESHOLD SET IN CONT. BED OF SEALANT
26 CONCRETE FLOOR SLAB
27 PRECAST CONCRETE BLOCK OR FOUNDATION WALL AS PER APPLICATION
28
29 1/4" ASPHALT IMPREGNATED PROTECTION BOARD (INORGANIC)
30 1 1/2" ROLLED BITUMINOUS SETTING BED (VARIES IN THICKNESS)
31 EXPANSION JOINT AND SEALANT
32 1 1/2" ASPHALT PAVER
33 METAL FILLER
34 1/4" GLASS
35 HOLLOW METAL FRAME
36 METAL STUD ANCHORED TO COLUMN
37 16 ga. METAL COVER PREFINISHED TO MATCH WINDOW WALL. COVER BY WINDOW MNFR. ATTACH MTL. STUD W/ COUNTER SUNK FLAT HEAD SCREWS FILL AND GRIND SMOOTH ALL EXPOSED SCREWS.
38 INTERIOR PARTITION WALL SEE WALL TYPES
39 3 5/8" MTL. STUDS @ 16"o.c. W/ 5/8" GYP. BRD. EA. SIDE
40 METAL GUARD RAIL SEE HANDRAIL DETAILS
41 EXTERIOR MASONRY
42 CHAMFER EDGE OF MASONRY SEALANT CONT. ALONG EDGE OF MASONRY AND COLUMN
43 6" MTL. STUDS @ 16"o.c. W/ BATT INSULATION BETWEEN STUDS W/ 5/8" GYP. BRD. ON INTERIOR W/ 1/2" EXTERIOR SHEATHING ON OTHER SIDE
44 TS 2"x"x1/4 PAINTED TO MATCH WINDOW WALL
45 METAL "J" MOLDING (TYPICAL)
46 CONC. SLAB ON GRADE
47 SUSPENDED CONC. SLAB
51 TS 2"x4"x1/4" PAINTED TO MATCH WINDOW WALL WHERE EXPOSED
52 STEEL STUD AND IMBED, SEE STRUCTURAL
56 1/2" BIRD MESH SCREEN WHERE DUCT OPENINGS OCCUR AND SHEET METAL CLOSURE AT REMAINER
57 FACTORY FINISHED METAL AIR LOUVRE
58 3 5/8" MTL. STUDS @ 16"O.C. W/ 5/8" GYP. BD. EA SIDE W/BATT INSULATION BETWEEN STUDS.
59 1/4" METAL INFILL PANEL
60 5/8" GYP. BD. CEILING ON 7/8" MTL. CHANNELS @ 16"O.C. ON 1 1/2" MTL. RUNNERS @ 4'-0"O.C.
61 TS 2"x4"x1/4" AT STAIRWAY ONLY PAINT TO MATCH WINDOW WALL

0000AQA22
Utah Valley Community College, Learning Resource Center - RV 90-014
Glazing Details - 7229

AS BUILTS

UTAH VALLEY COMMUNITY COLLEGE LEARNING RESOURCE CENTER/LIBRARY ADDITION

STRUCTURAL ENGINEER	: Bsumek Mu and Associates
MECHANICAL ENGINEER	: VanBoerum and Frank
ELECTRICAL ENGINEER	: Becherer Nielson and Associates
LANDSCAPE ARCHITECT	: MGB and Associates
INTERIOR DESIGNER	: Don Harward

DRAWN BY: AN
CHECKED BY: KRP

STATE OF UTAH — SCOTT LOUIE SCOWNING — P.E. 1146 ARCH. 256 ARCH. 455 — LICENSED ARCHITECTS & ENGINEERS — Salt Lake City

Scott, Louie and Browning
architects, engineers, planners

GLAZING DETAILS

Utah Valley Community College
Learning Resource Center/Library Addition

Orem, Utah DFCM Project No. RV-90-014

A-22

Feb. 18, 1997

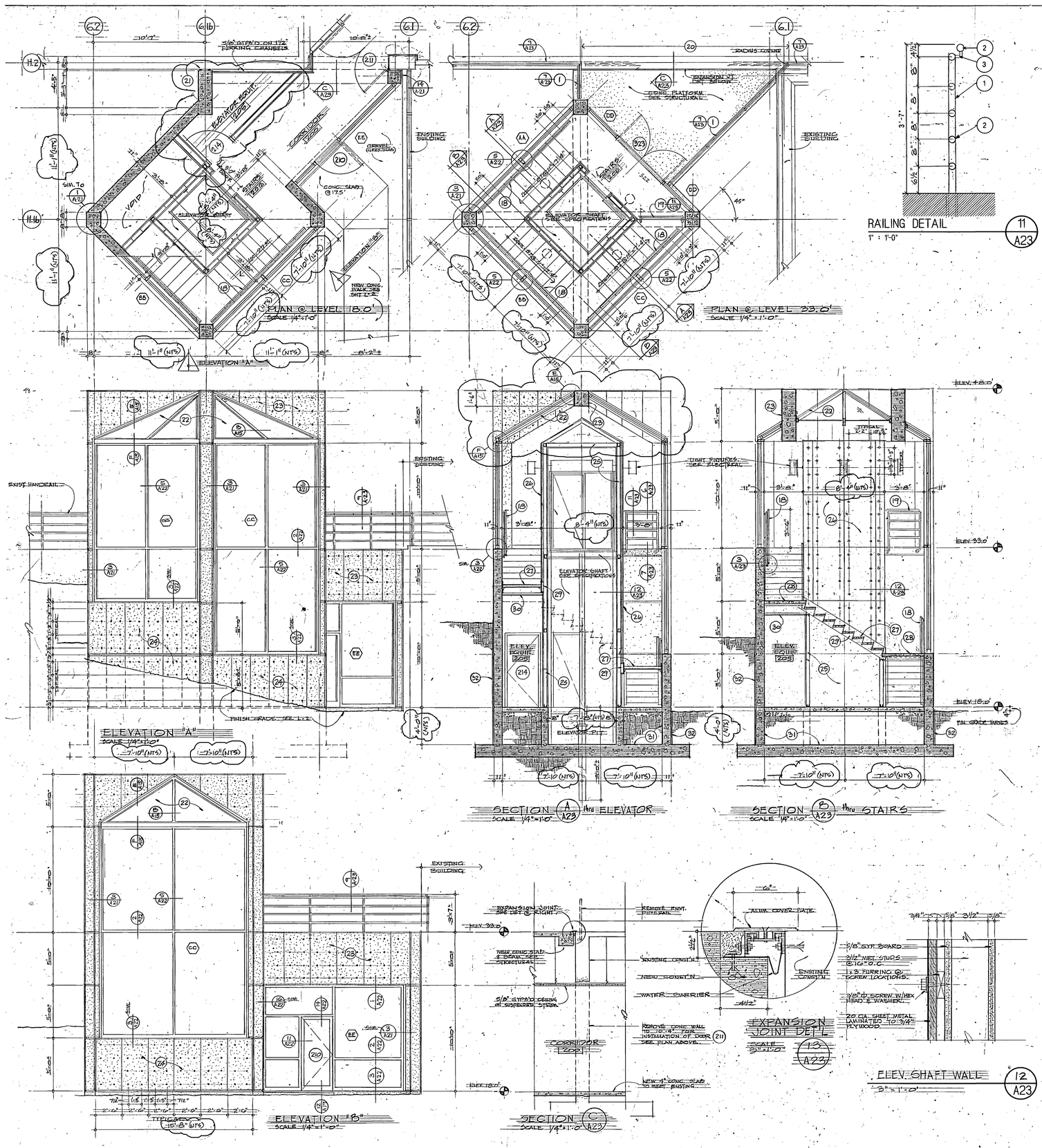

RAILING DETAIL 11 A23
1" : 1'-0"

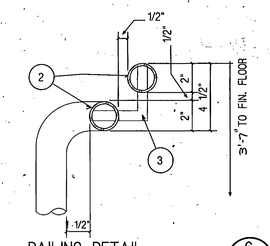

RAILING DETAIL 6 A23
3" : 1'-0"

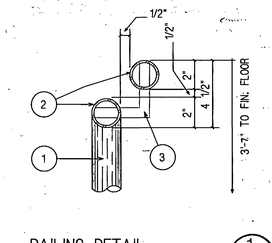

RAILING DETAIL 1 A23
3" : 1'-0"

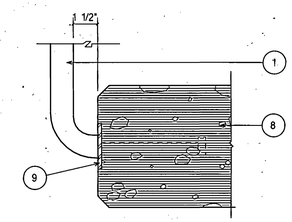

RAILING DETAIL 7 A23
3" : 1'-0"

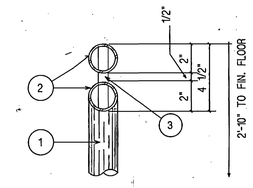

RAILING DETAIL 2 A23
3" : 1'-0"

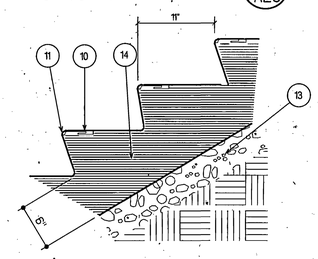

STAIR DETAIL 8 A23
1 1/2" = 1'-0"

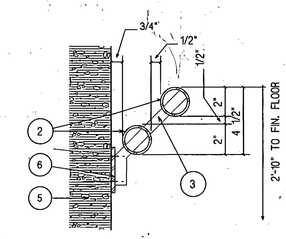

RAILING DETAIL 3 A23
3" : 1'-0"

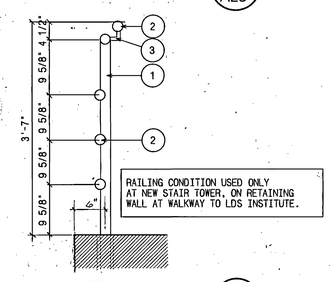

RAILING DETAIL 9 A23
1" : 1'-0"

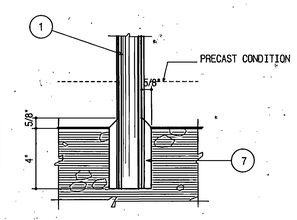

RAILING DETAIL 4 A23
3" : 1'-0"

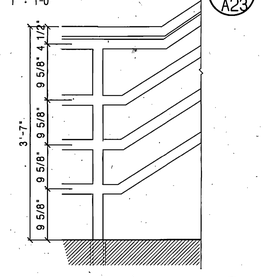

RAILING DETAIL 10 A23
1" : 1'-0"

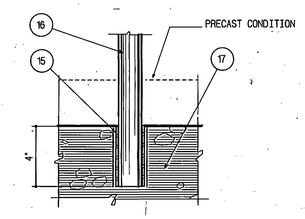

RAILING DETAIL 5 A23
3" : 1'-0"

CODED NOTES

1	1 1/2" NOMINAL PIPERAIL VERTICAL @ 5'-0" o/c
2	1 1/2" NOMINAL PIPERAIL HORIZONTAL
3	3/4" DIAMETER ROD @ 30"o.c. MAX. WELD AND GRIND SMOOTH ALL ENDS
5	CONCRETE WALL OR BRICK VENEER
6	1/4" X 3" DIAMETER PLATE W/ 3 3/8" DIAMETER ANCHOR BOLTS SET IN CONCRETE OR MASONRY WALL
7	GROUT ANCHOR HOLE FULL
8	CONCRETE LANDING SLAB
9	1/4" x 3" DIAMETER IMBED PLATE SET FLUSH TO FACE OF CONCRETE LANDING SLAB
10	ABRASIVE ALUMINUM NOSING CAST IN PLACE
11	1/2" RADIUS TYPICAL
13	2" BED OF SAND ON 10 MIL. VAPOUR BARRIER STAIRS AT LOADING DOCK ONLY.
14	CONCRETE STAIR
15	2" NOMINAL PIPE SLEAVE SET AND FORMED IN CONCRETE SLAB
16	1 1/2" REMOVABLE NOMINAL PIPERAIL VERTICAL
17	4 1/2" CONCRETE SLAB
18	PIPERAIL - SEE DETAILS 3/A-23
19	PIPERAIL - SEE DETAILS 6/A-23 & 7/A-23
20	CUT AND REMOVE EXISTING PIPERAIL. PATCH AND FILL CONC. SLAB AS NECESSARY. GRIND & WELD NEW PIPERAIL TO MATCH EXISTING
21	BLACK NEOPRENE COMPRESSION SEALS BOTH SIDES COLUMN
22	DOUBLE GLAZED SKYLIGHT. SEE DETAILS SHEET A-21
23	CONCRETE BEAM. SEE STRUCTURAL DRAWINGS
24	CONCRETE WALL WITH TYPICAL FORM LAYOUT. SEE SHEET A-24 FOR CONC. FORM AND TIE PATTERNS
25	1 HR. PARTITION. 3-1/2" METAL STUDS @ 16"o.c. W/5/8" GYPSUM WALLBOARD BOTH SIDES
26	METAL CLAD PANELS BOLTED TO 1 HR. PARTITION. ALL EXPOSED SIDES ELEVATOR SHAFT
27	METAL STAIR TREADS FILLED WITH CONC. RUBBER TREADS & RISERS
28	4" CONC. SLAB ON 1-1/2" STEEL DECK AT LANDINGS. RUBBER TILE
29	12" STEEL CHANNEL STRINGER
30	5/8" GYPSUM CEILING IN ELEVATOR EQUIP. ROOM
31	CONCRETE FOUNDATION WALLS & FOOTING PAD. SEE STRUCTURAL DRAWINGS
32	WATERPROOFING MEMBRANE (TYP)

0000AQA23
Utah Valley Community College, Learning Resource Center - RV 90-014
Stair Details and Elevators - 7230

AS BUILTS

UTAH VALLEY COMMUNITY COLLEGE LEARNING RESOURCE CENTER/LIBRARY ADDITION

ELEVATOR SECTION / STAIR DETAILS

STRUCTURAL ENGINEER	: Bsumek Mu and Associates
MECHANICAL ENGINEER	: VanBoerum and Frank
ELECTRICAL ENGINEER	: Becherer Nielson and Associates
LANDSCAPE ARCHITECT	: MGB and Associates
INTERIOR DESIGNER	: Don Harward

DRAWN BY: AU
CHECKED BY: MW

Scott, Louie and Browning
architects, engineers, planners
4765 Holladay Boulevard, Salt Lake City, Utah 84117

Utah Valley Community College
Learning Resource Center/Library Addition
Orem, Utah DFCM Project No. RV:90-01

A-23

Feb. 18, 1991

MONSEN ENGINEERING CO 106657

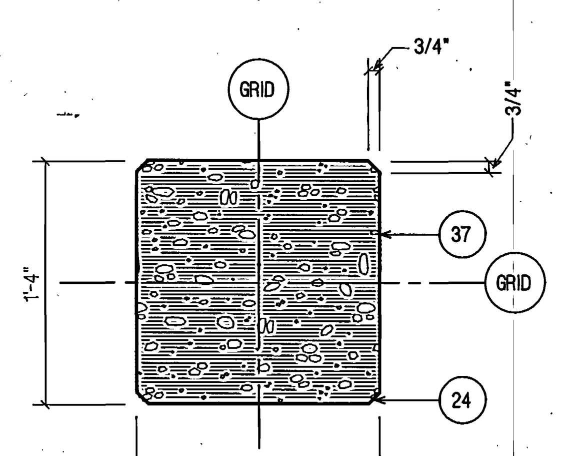

TYPICAL CONC. COLUMN 15/A24
1 1/2" : 1'-0"

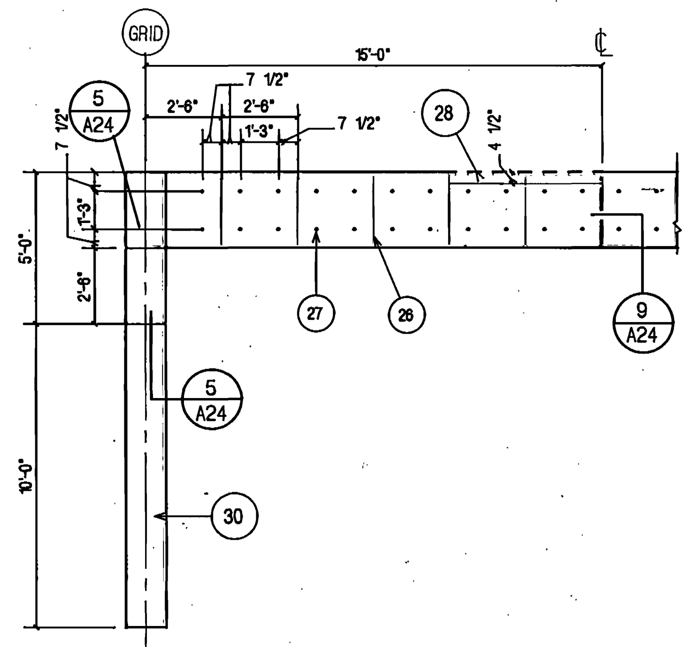

TYPICAL 2'-6" BEAM 12/A24
1/4" : 1'-0"

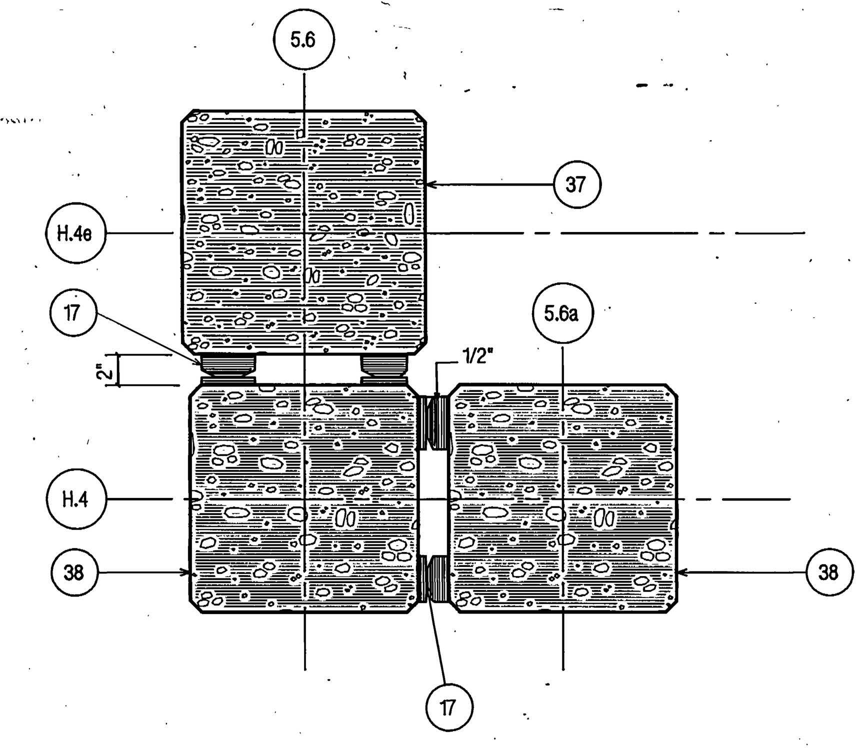

COL. PLAN EXPANSION JOINT 8/A24
1 1/2" = 1'-0"

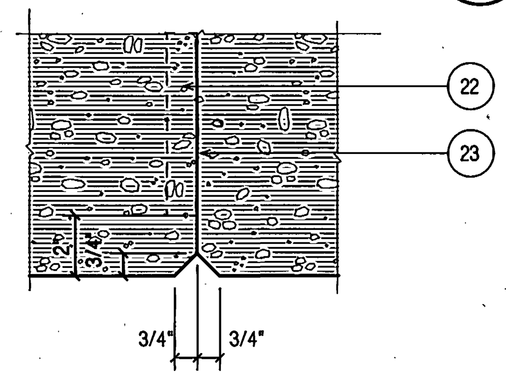

CONSTR. JT. DETAIL 9/A24
3" = 1'-0"

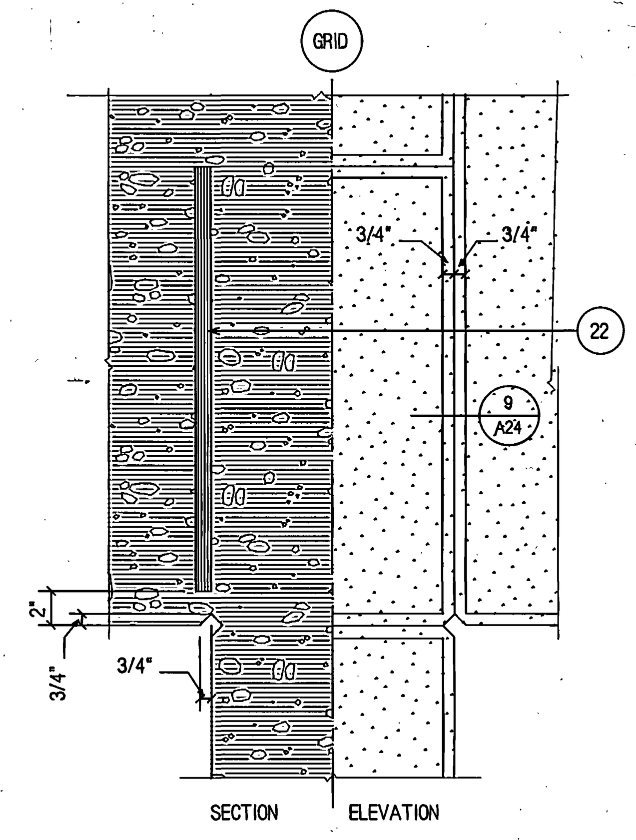

CONSR. JT. @ COLUMN. 4/A24
1 1/2" = 1'-0"

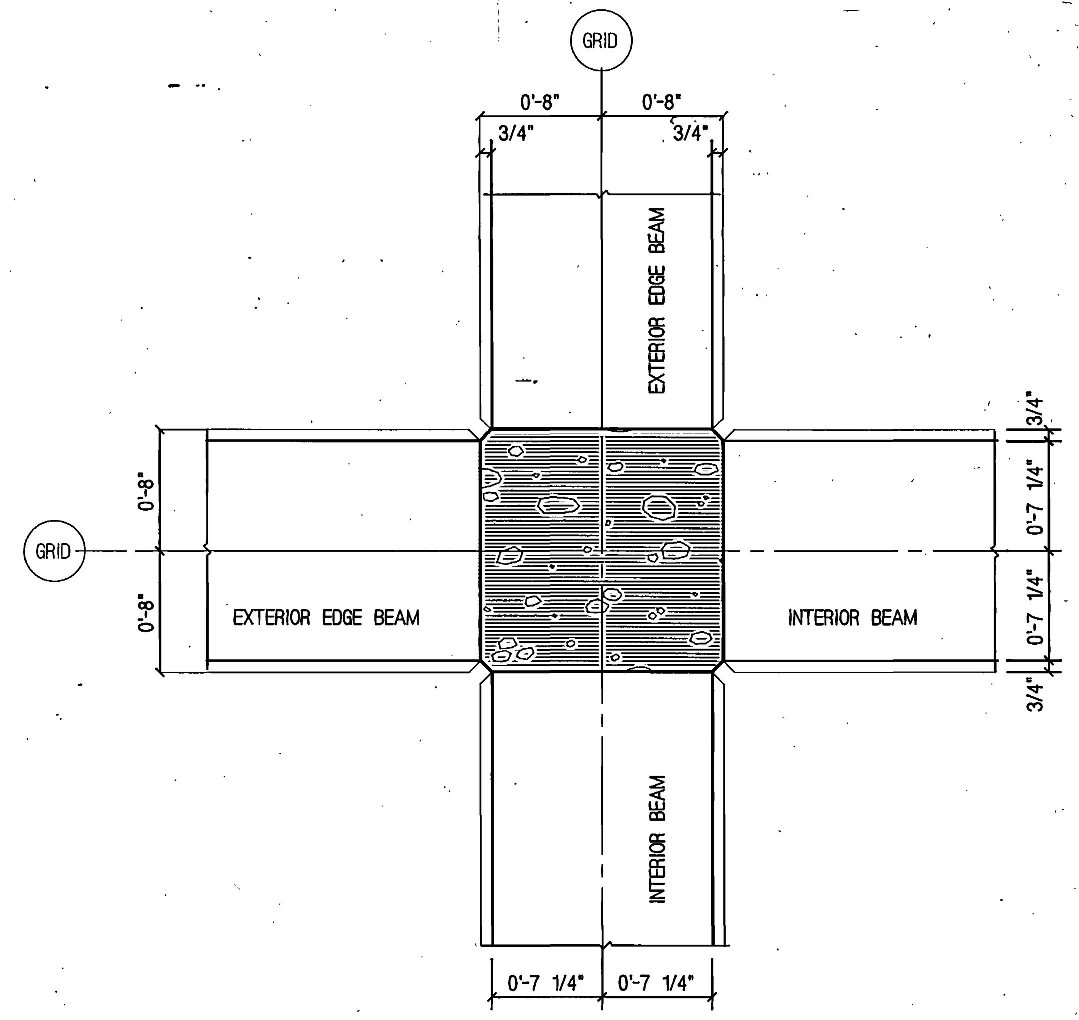

TYP. INTERIOR JOINT PATTERN 1/A24
1 1/2" = 1'-0"

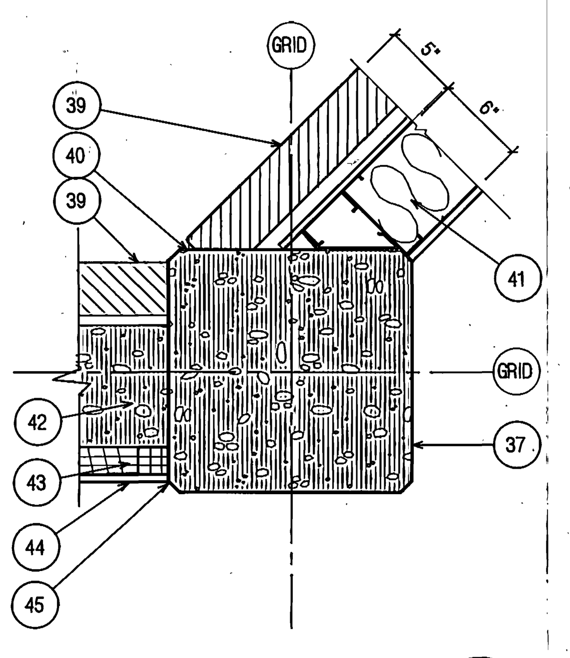

WALL/COLUMN DETAIL 16/A24
1 1/2" : 1'-0"

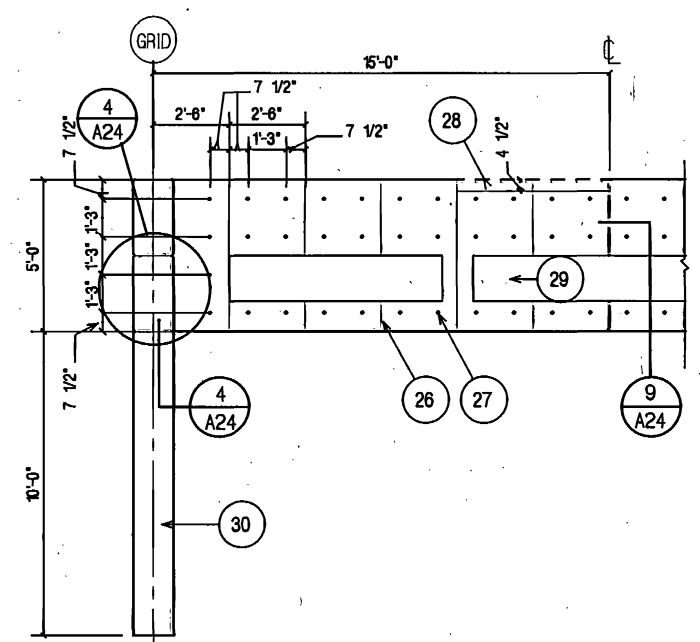

TYPICAL 5'-0" BEAM 13/A24
1/4" : 1'-0"

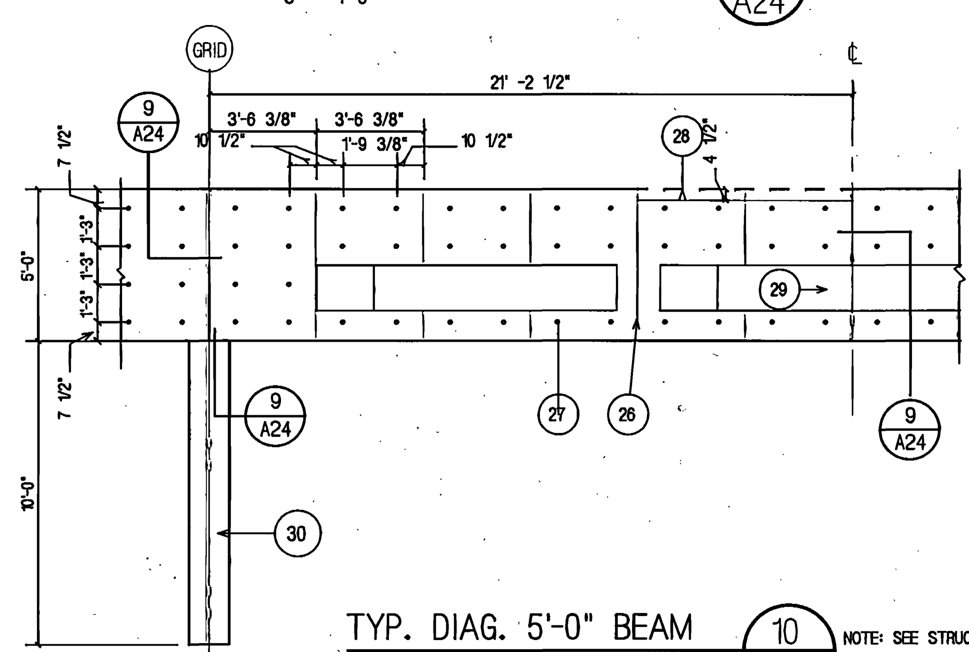

TYP. DIAG. 5'-0" BEAM 10/A24 NOTE: SEE STRUCTURAL
1/4" : 1'-0"

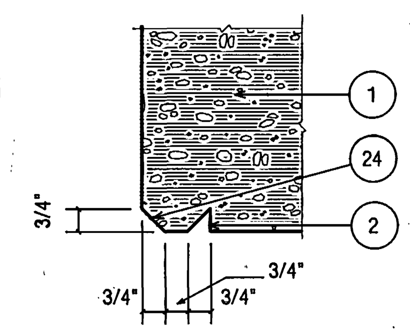

CONCRETE DRIP 5/A24
3" = 1'-0"

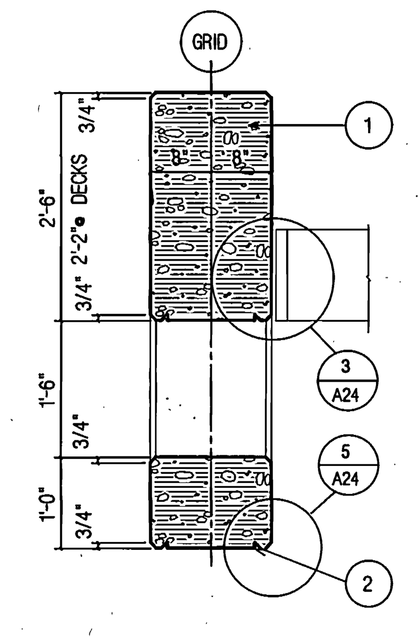

TYPICAL PERGOLA BEAM 6/A24
3/4" = 1'-0"

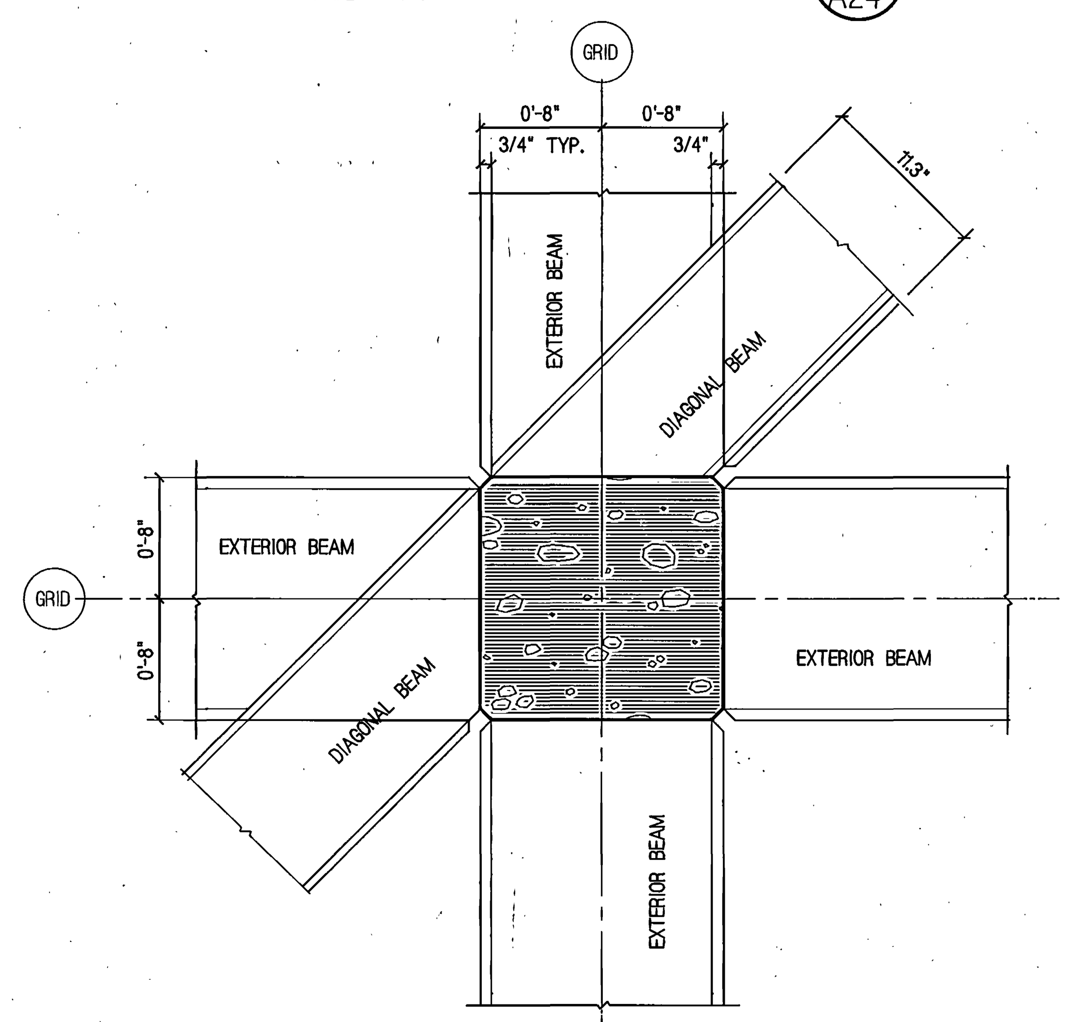

NOTE: ALL BEAMS SHOWN FOR CLARITY, SOME BEAMS MAY NOT BE USED IN ALL APPLICATIONS. SEE PLANS AND VERIFY W/ ARCHITECT.

TYP. EDGE JOINT PATTERN 2/A24
1 1/2" = 1'-0"

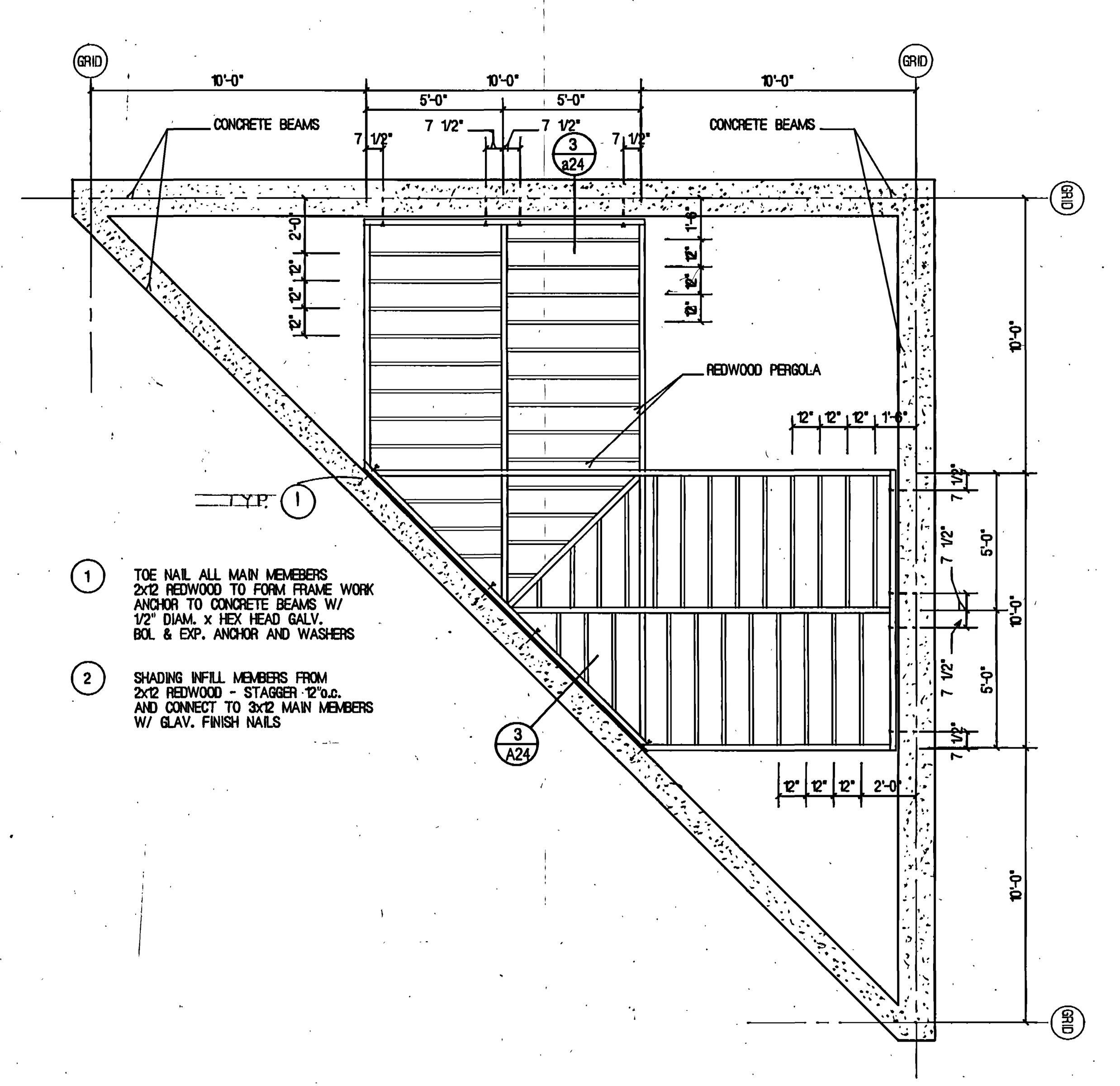

1. TOE NAIL ALL MAIN MEMEBERS 2x12 REDWOOD TO FORM FRAME WORK ANCHOR TO CONCRETE BEAMS W/ 1/2" DIAM. x HEX HEAD GALV. BOL & EXP. ANCHOR AND WASHERS
2. SHADING INFILL MEMBERS FROM 2x12 REDWOOD - STAGGER 12"o.c. AND CONNECT TO 3x12 MAIN MEMBERS W/ GLAV. FINISH NAILS

TYPICAL PERGOLA PLAN 14/A24
1/4" : 1'-0"

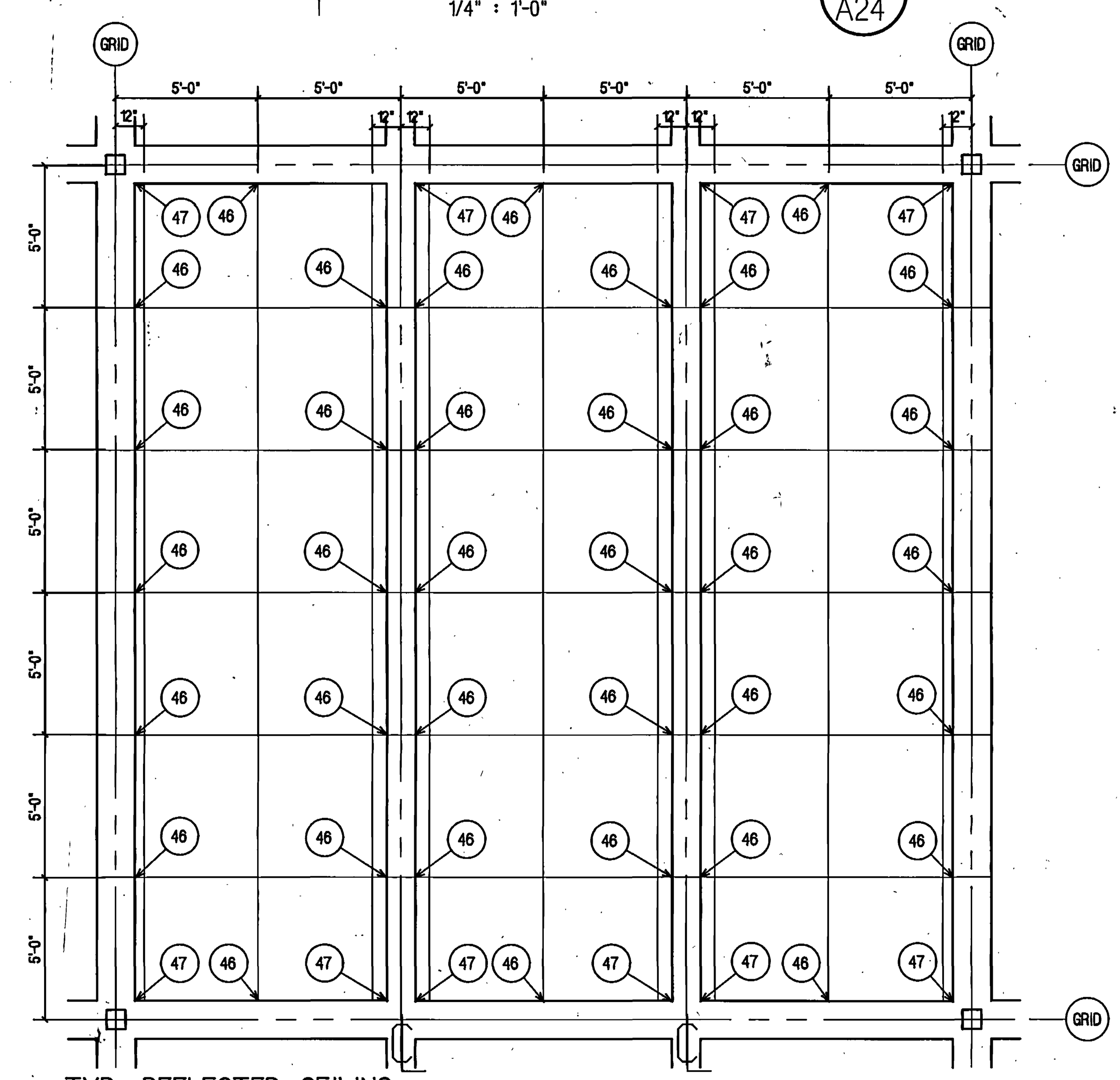

TYP. REFLECTED CEILING CONC. FORMING PATTERN 11/A24
1/4" : 1'-0"

NOTES: 1) NO TIES OR TIE HOLES EXPOSED
2) USE B-B HDO PLYWOOD FOR FORM WORK, SEE SPEC.

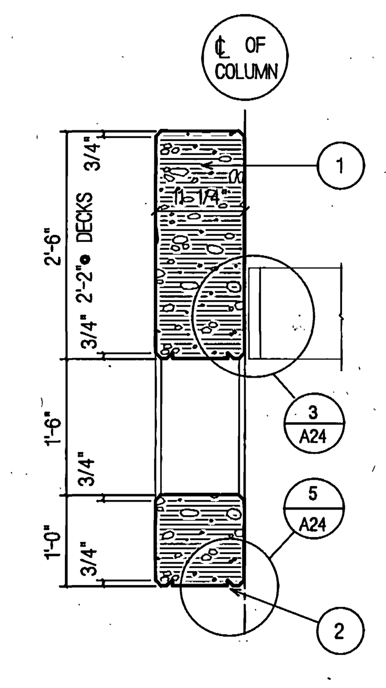

TYP. DIAG. PERGOLA BEAM 7/A24
3/4" = 1'-0"

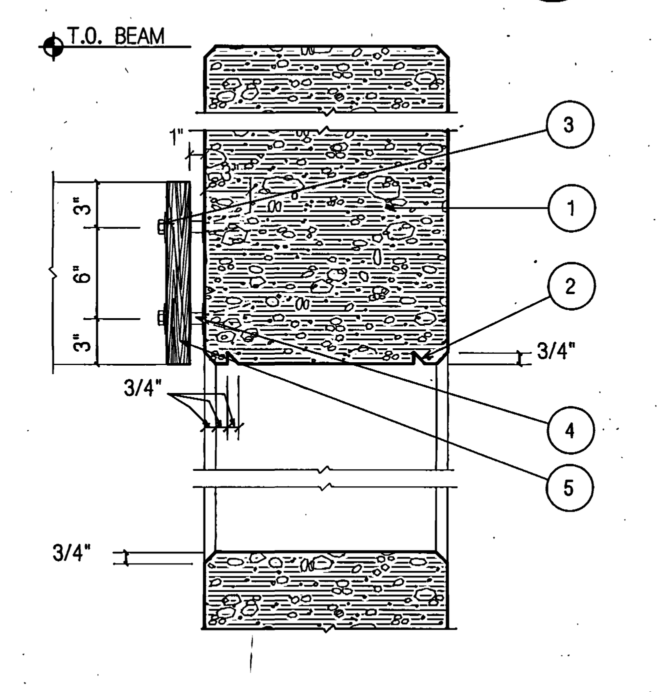

TYP. SECTION @ PERGOLA 3/A24
1 1/2" = 1'-0"

CODED NOTES

1	CONC. BEAM SEE PLAN FOR OPENINGS W/ PERGOLAS AND SEE STRUCT. FOR BEAM WIDTH
2	CONT. DRIP TYPICAL
3	1/2" GALV. HEX HEAD BOLT & EXPANSION ANCHOR W/ WASHERS (3 @ EA. BOLT.)
4	1" DIAM. GALV. STEEL SPACER
5	REDWOOD 2x12
6	PIPE RAIL
7	PRECAST CONC. EDGE PAVER
8	ASPHALT PAVER
9	BITUMINOUS SETTING BED
10	WATERPROOF MEMBRANE CONT. UNDER PAVER EDGE HOLD BACK 1" FROM EDGE
11	PIPE SLEEVE 1/2" LARGER DIAM. THAN RAIL SPACE GROUTED SOLID.
12	BLOCK OUT FOR RAIL FILL SPACE BETWEEN RAIL AND PAVER W/ SEALANT
13	SET PAVER ON FULL MORTAR BED LEVEL EDGES TO WITH ASPHALT PAVERS
14	TWO #4 BARS U- SHAPED x 10" WELDED TO SLEEVE
15	TWO #4 DOWELS @ 24"o.c. 8" MIN. IMBED
16	WATERPROOF MEMBRANE CONT.
17	BLACKNEOPRENE COMPRESSION SEALS BOTH SIDES
18	WATER PROOF MEMEBRANE CONT. THROUGH EXP. JOINT FILL W/ LIQUID MEMBRANE WATER PROOF
19	1/4" ASPHALT IMPREGNATED INORGANIC PROTECTION BOARD.
20	1" MIN. RADIUS EDGE W/ TROWEL FINISH
21	BRASS EXP. JOINT COVER CONT. ANCHORED TO PRECAST CONC. PAVER
22	1"x10"x28" STYRENE FOAM FILLER BOTH SIDES OF COLUMN.
23	COLD JOINT
24	3/4" CHAMFER
25	CAST IRON GRATE INTEGRAL W/ DRAIN
26	FORM MARK TYPICAL
27	CONCRETE TIE
28	LINE OF FLOOR SLAB WHERE APPLICABLE
29	TYPICAL BLOCKOUT - INFILL PANEL WHERE APPLICABLE
30	CONCRETE COLUMN
32	BRASS TRIPOD INSERT FORMED IN CONCRETE PAVER
33	CONCRETE SLAB
34	PRECAST CONCRETE PAVER W/ INTEGRAL BRASS TRIPOD INSERT
35	NEOPRENE RUBBER ISOLATION PADS @ 12" o.c.
36	SEALANT CONT. BETWEEN APHALT PAVER AND ISOLATION PAVER
37	NEW CONCRETE COLUMN, SEE STRUCTURAL
38	EXISTING CONCRETE COLOMN
39	EXTERIOR MASONRY
40	CHAMFER EDGE OF MASONRY W/SEALANT CONT. ALONG EDGE OF MASONRY & COLUMN
41	6" MTL. STUD @ 16"O.C. W/ 5/8" GYP. BD. EA. SIDE
42	8" CONC. SHEAR WALL, SEE STRUCTURAL
43	2" Z CHANNELS W/ 2" RIGID INSULATION
44	5/8" GYP. BD.
45	METAL "J" MOLDING (TYPICAL)
46	FORM LINE CONTINUES @ VERT. BEAM FACES
47	DEVELOP CONSISTENT PATERN @ SOFFIT & VERT. FACE

0000AQA24
Utah Valley Community College, Learning Resource Center - RV.90-014
Miscellaneous Details - 7231

AS BUILTS

UTAH VALLEY COMMUNITY COLLEGE LEARNING RESOURCE CENTER/LIBRARY ADDITION

STRUCTURAL ENGINEER : Bsumek Mu and Associates
MECHANICAL ENGINEER : VanBoerum and Frank
ELECTRICAL ENGINEER : Becherer Nielson and Associates
LANDSCAPE ARCHITECT : MGB and Associates
INTERIOR DESIGNER : Don Harward

DRAWN BY: AN
CHECKED BY: KRP

STATE OF UTAH — SCOTT, LOUIE & BROWNING, INC. — P.E. 1148, ARCH. 230, ARCH. 432 — Salt Lake City — LICENSED ARCHITECTS & ENGINEERS

Scott, Louie and Browning
architects, engineers, planners

MISCELLANEOUS DETAILS

Utah Valley Community College
Learning Resource Center/Library Addition
Orem, Utah DFCM Project No. RV:90-014

A-24
FEB. 18, 1991

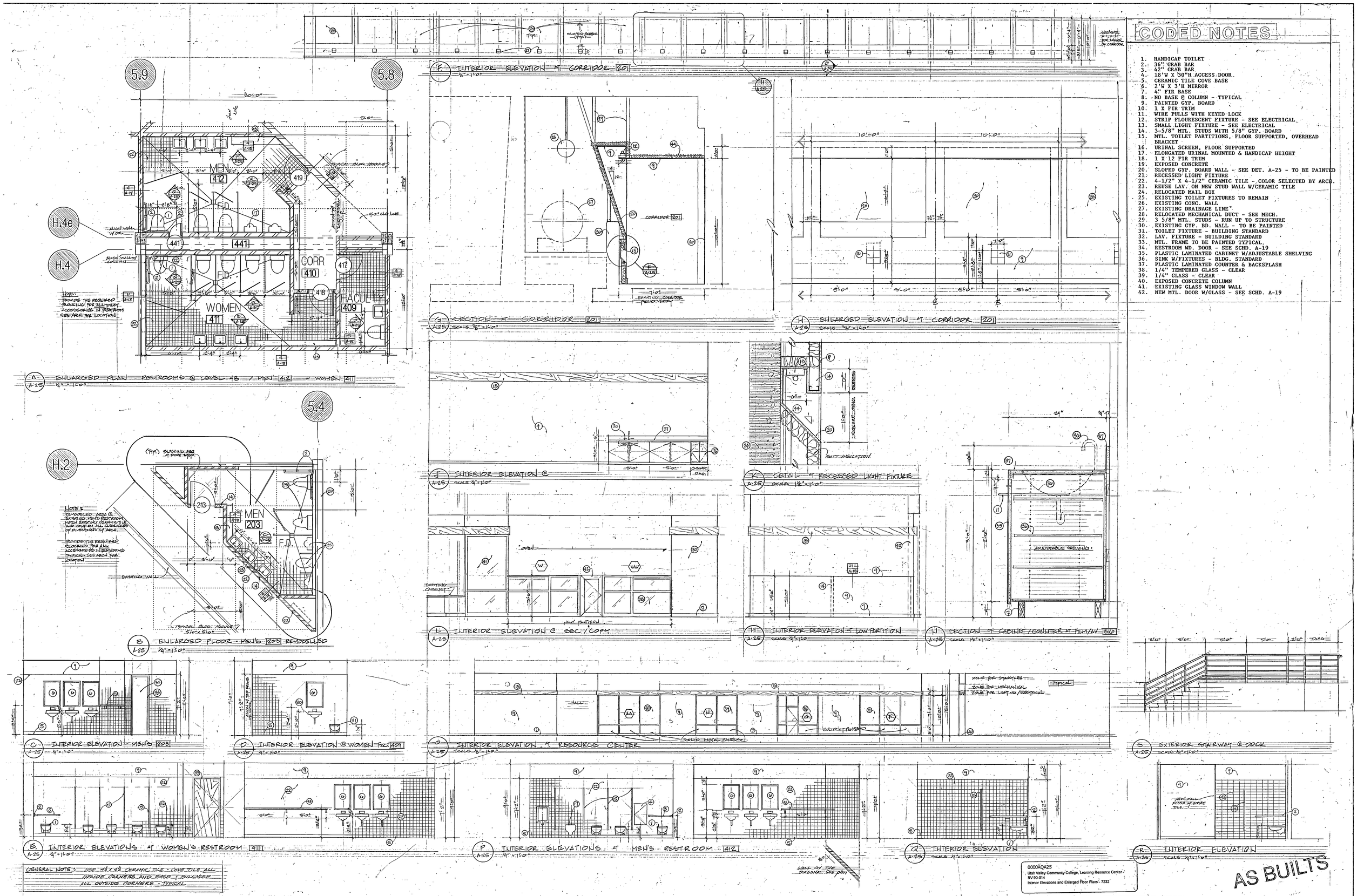

CODED NOTES

1. HANDICAP TOILET
2. 36" GRAB BAR
3. 42" GRAB BAR
4. 18"W X 30"H ACCESS DOOR
5. CERAMIC TILE COVE BASE
6. 2"W X 3"H MIRROR
7. 4" FIR BASE
8. NO BASE @ COLUMN - TYPICAL
9. PAINTED GYP. BOARD
10. 1 X FIR TRIM
11. WIRE PULLS WITH KEYED LOCK
12. STRIP FLOURESCENT FIXTURE - SEE ELECTRICAL
13. SMALL LIGHT FIXTURE - SEE ELECTRICAL
14. 3-5/8" MTL. STUDS WITH 5/8" GYP. BOARD
15. MTL. TOILET PARTITIONS, FLOOR SUPPORTED, OVERHEAD BRACKET
16. URINAL SCREEN, FLOOR SUPPORTED
17. ELONGATED URINAL MOUNTED & HANDICAP HEIGHT
18. 1 X 12 FIR TRIM
19. EXPOSED CONCRETE
20. SLOPED GYP. BOARD WALL - SEE DET. A-25 - TO BE PAINTED
21. RECESSED LIGHT FIXTURE
22. 4-1/2" X 4-1/2" CERAMIC TILE - COLOR SELECTED BY ARCH.
23. REUSE LAV. ON NEW STUD WALL W/CERAMIC TILE
24. RELOCATED MAIL BOX
25. EXISTING TOILET FIXTURES TO REMAIN
26. EXISTING CONC. WALL
27. EXISTING DRAINAGE LINE
28. RELOCATED MECHANICAL DUCT - SEE MECH.
29. 3 5/8" MTL. STUDS - RUN UP TO STRUCTURE
30. EXISTING GYP. BD. WALL - TO BE PAINTED
31. TOILET FIXTURE - BUILDING STANDARD
32. LAV. FIXTURE - BUILDING STANDARD
33. MTL. FRAME TO BE PAINTED TYPICAL.
34. RESTROOM WD. DOOR - SEE SCHD. A-19
35. PLASTIC LAMINATED CABINET W/ADJUSTABLE SHELVING
36. SINK W/FIXTURES - BLDG. STANDARD
37. PLASTIC LAMINATED COUNTER & BACKSPLASH
38. 1/4" TEMPERED GLASS - CLEAR
39. 1/4" GLASS - CLEAR
40. EXPOSED CONCRETE COLUMN
41. EXISTING GLASS WINDOW WALL
42. NEW MTL. DOOR W/GLASS - SEE SCHD. A-19

GENERAL NOTE: USE 4 1/4 x 4 1/4 CERAMIC TILE - COVE TILE ALL INSIDE CORNERS AND BASE; BULLNOSE ALL OUTSIDE CORNERS - TYPICAL

UTAH VALLEY COMMUNITY COLLEGE LEARNING RESOURCE CENTER/LIBRARY ADDITION

ENLARGED PLANS AND ELEVATIONS

...AL ENGINEER	: Bsurnek Mu and Associates
MECHANICAL ENGINEER	: VanBoerum and Frank
ELECTRICAL ENGINEER	: Becherer Nielson and Associates
LANDSCAPE ARCHITECT	: MGB and Associates
INTERIOR DESIGNER	: Don Harward

DRAWN BY: KRP
CHECKED BY: WMP

STATE OF UTAH — SCOTT L. BROWNING — P.E. 1188 ARCH. 255 ARCH. 355 — SALT LAKE CITY — LICENSED ARCHITECTS & ENGINEERS

Scott, Louie and Browning
architects, engineers, planners
4766 Holladay Boulevard, Salt Lake City, Utah 84117

Utah Valley Community College
Learning Resource Center/Library Addition
Orem, Utah DFCM Project No. RV:90-014

A-25

FEB. 18, 1991

MONSEN ENGINEERING CO. 108657

FINISH SCHEDULE KEY

	WALL (material)
1	5/8" TYPE "X" GYPSUM BOARD
2	5/8" GYPSUM BOARD (PAINTED)
3	CONCRETE
4	GLASS IN METAL FRAME - FLOOR TO 10'-0" HIGH
5	5/8" GYPSUM BOARD PARTITION TO 5'-0" HIGH A.F.F.
6	METAL INFILL PANEL IN METAL FRAME - FLOOR TO 5'-0" HIGH A.F.F.
NC	NO CHANGE

	FLOOR
A	VINYL COMPOSITION TILE
B	CARPET (N.I.C.)
C	CONCRETE SEALED
D	TRAFFIC MAT
E	CONCRETE SEALED W/ABASIVE NOSING
F	CERAMIC TILE
NC	NO CHANGE

	BASE
A	4" RUBBER BASE
B	CERAMIC TILE
C	4" FIR BASE
NC	NO CHANGE

	WAINSCOT
A	CERAMIC TILE 7'-1" ← A.F.F.
NC	NO CHANGE

	WALL (finishes)
A	PAINT
B	WALLCOVERING (N.I.C.)
C	CERAMIC TILE 4 1/4"x4 1/4"
D	SHEET METAL CLAD PANEL SEE SHEET A-23
E	ACOUSTICAL PANELS
F	CONCRETE, SEALED
G	REPAIR AND PAINT EXISTING
H	5/8" GYPSUM BOARD
NC	NO CHANGE

	CEILING
A	30"x60" LAY-IN ACOUSTICAL PANELS
B	STRUCTURE EXPOSED
C	5/8" TYPE "X" GYPSUM BOARD (PAINTED)
D	VENTWOOD W/GYPSUM BOARD BACKING
	GYPSUM BOARD TO BE PAINTED WHITE
F	METAL DECK PAINTED (TOUCH-UP)
NC	NO CHANGE

	NOTES
1	WHERE CONCRETE DECK IS EXPOSED AND CEILING IS UNFINISHED
	ALL DUCTWORK AND PIPING IS TO BE PAINTED TO MATCH EXISTING CAMPUS SYSTEM.
2	ALL WALLS AND CEILING TILES TO BE BLACK
3	REFER TO FLOOR PLANS FOR CHAULBOARD, TACK BOARDS AND MARKERBOAD LOCATIONS.
4	VENTWOOD CEILING W/5'-0" PANEL LAYOUT W/ FIR TRIM.
5	HANDRAILS TO BE PAINTED SEE STAIR DETAILS ON SHEET A-23
6	SEE SPECS FO ELEVATOR FINISNES.

CODED NOTES

1. Existing Door
2. Existing glass window system
3. Existing metal panel in system
4. Gyp. Bd. on 3 5/8" stud to be painted
5. Wood Valance (bldg. standard) match existing
6. Existing Gyp. Bd. stud wall
7. Existing concrete column
8. relocated sink and fixtures
9. plastic laminated backsplash
10. new plastic laminated cabinet
11. fir base (match existing)
12. new cabinet (high density w/ plastic lam.)
13. Adjustable plastic laminated shelves
14. wire pulls (horiz.)
15. 1x fir trim
16. provide required blocking for cabinet against existing stud wall
17. 1/4" clear glass w/ pivoting cabinet hinges for glass doors (top & bottom) ... glass to be tempered
18. 1x fir trim at base
19. PLUMBING LINE FOR HOSE BIB.

FINISH SCHEDULE

Room number	Room name	Sheet number	Int. elev.	Floor	Base	Wains.	Walls North				Walls South				Walls East				Walls West				Ceiling Type	Ceiling Hgt.	Notes
200	CORRIDOR	A-1, 23	———	CARPET	C	———	3	F			3	4	F		3	4			———				C	10'-0"	CARPET N.I.C., CLEAN EXISTING CONC & SEAL
201	CORRIDOR	A-1,2	SEE SHEET A-25	CARPET	C	———	2	A			2	A			2	A			2	A			C	10'-0"	CARPET N.I.C., CEILING VARIES
202	ELEVATOR EQUIPMENT ROOM	A-2	———	CONC.,SEAL	A	———	2	A			2	A			2	A			2	A			B	VARIES	UNDER STAIRWAY RUN
203	MEN	A-2, 25	SEE SHEET A-25	TILE	B	———	REPAIR EXISTING				NO WORK				REPAIR EXISTING				NO WORK				EXISTING		MATCH EXISTING FINISHES
204	CORRIDOR	A-2	———	CARPET	C	———	REPAIR EXISTING				H	A			———				———				EXISTING		CONT. OF COORIDOR 201 ● ANGLE
205	ELEVATOR EQUIPMENT ROOM	A-1	———	CONC.,SEAL	———	———	2	A			2	A			2	A			2	A			C	VARIES	
206	STAIRWAY	A-1,2	SEE SHEET A-23	RUBBER	A	———	3	4	F	D	3	4	F	D	3	4	F	D	3	4	F	D	SKYLIGHT		
301	VESTIBULE	A-3	———	NC	NC	———	NC				NC				NC				NC				NC	NC	EXISTING AREA
302	CORRIDOR	A-3	———	B	C	———	NC				NC				2	A				A			NC	NC	CONT. OF CORRIDOR 317, SEE SHEET A-3
303	EDIT	A-3	———	B	C	———	NC				2	A			2	A			2	A			A	10'-0"	
304	GRAPHICS	A-3	———	B	C	———	2	A	4		2	A	4		2	A			2	A			C	10'-0"	
305	CONTROL	A-3	———	B	C	———	NC				2	A			2	A			2				C	10'-0"	
306	OFFICE	A-3	———	B	C	———	2	A			2	A			2	A			NC	A			C	10'-0"	
307	FACULTY ASSISTANT	A-3	———	B	C	———	2	A	4		2	A			2	A			2	A			B		
308	EDIT	A-3	———	B	C	———	2	A			2	A			2	A			2	A			A	10'-0"	
309	OFFICE	A-3	———	B	C	———	2	A			2	A	4		2	A			2	A			C	10'-0"	
310	OFFICE	A-3	———	B	C	———	2	A			2	A	4		2	A			2	A			C	10'-0"	
311	OFFICE	A-3	———	B	C	———	2	A			2	A	4		2	A			2	A			C	10'-0"	
312	ENGR. ROOM	A-3	———	B	C	———	G				2	A			G				2				C	10'-0"	EXISTING CLG. TO REMAIN
313	TELECOMMUNICATIONS ROOM	A-3	———	B	C	———	2	A	E		2	A	E		2	A	E		G	E			A	10'-0"	
314	TELECOM. PRES.	A-3,4	———	B	C	———	2	A	E		2	A	E		G				G	E			A	10'-0"	ACOUSTICAL PANELS ON SOME SURFACES
315	CONTROL	A-4	———	B	NC	———	NC				G				NC				NC				NC	NC	NEW DOOR TO TOILET ROOM
316	FILM/AV	A-4	———	B	C	———	2	A			NC				NC				NC				NC	NC	SINK CABINET, SEE SHEET A-25
317	CORRIDOR	A-3,4	———	B	C	———	NC				NC				NC				G				NC	NC	CONT. OF CORRIDOR 302, SEE SHEET A-3
318	MEDIA LEARNING CENTER/ COMPUTER LAB	A-3,4	———	B	C	———	NC				2	A			G				NC				NC	NC	
319	MEN	A-4	SEE SHEET A-25	F	B	———	NC				NC				G				NC				NC	NC	NEW DOOR TO CONTROL 315
320	CONTROL	A-4	SEE SHEET A-26	B	C	———	2	A			G				2	A			2	A			B	1	
401	VESTIBULE	A-5	———	D	A	———	NC				2	A			2	A			2	A			NC	NC	
402	RECEIVING	A-5	———	NC	NC	———	G				G				2	A			G				NC	NC	
403	TECHNICAL PROCESS	A-5	———	NC	NC	———	NC				G				G				NC				NC	NC	
404	CONFERENCE	A-5	———	B	C	———	G				G								4	MODIFY			B	NC	MOVABLE PARTITION, EAST WALL
405	SEC/COPY	A-5	———	B	C	———	NC				NC				6				NC				B	NC	SEE SHEET A-20 ⟨W⟩ ⟨WW⟩
406	OPEN STUDY	A-5	———	B	C	———	2	A			NC								NC				B	1	
407	CONTROL	A-5	———	B	C	———	4				2	A			2	A			2	A			A	10'-0"	
408	LANGUAGE LAB	A-5	———	B	C	———	2	A			4				2	A			2	A			A	10'-0"	
409	WOMEN	A-5	SEE SHEET A-25	F	B	7'-2"	1	C	2	A	1	C	2	A	1	C	2	A	1	C	2	A	C	9'-0"	
410	CORRIDOR	A-5	SEE SHEET A-25	B	C	———	2	A			2	A			2	A			2	A			C	9'-0"	ENTRY TO RESTROOMS
411	WOMEN	A-5	SEE SHEET A-25	F	B	7'-2"	1	C	2	A	1	C	2	A	1	C	2	A	1	C	2	A	C	9'-0"	
412	MEN	A-6	SEE SHEET A-25	F	B	7'-2"	1	C	2	A	1	C	2	A	1	C	2	A	1	C	2	A	C	9'-0"	
413	RESOURCE CENTER	A-6	———	B	C	———	2	A	4		2	A	4		2	A	4		2	A	3		B,D	1	SEE DETAILS SHEET A-16,17/CLERESTORY
414	PERIODICALS	A-6	———	B	C	———	2	A	4		2	A			2	A			4				C	10'-0"	
415	HALL	A-6	SEE SHEET A-25	B	C	———	2	A	4		2	A	4										B	1	
416	GS	A-6	———	B	C	———	4				2	A			2	A			4				C	10'-0"	
417	GS	A-6	———	B	C	———	2	A			4				2	A			4				C	10'-0"	
418	RARE BOOK COLLECTION	A-6	———	B	C	———	4				2	A			4				2	A			B	1	
419	GS	A-6	———	B	C	———	4				2	A			2	A			2	A			C	10'-0"	
420	GS	A-6	———	B	C	———	2	A			4				2	A			2	A			C	10'-0"	
421	GS	A-6	———	B	C	———	5	A			5	A			5	A			2	A			B	1	
422	GS	A-6	———	B	C	———	5	A			5	A			5	A			2	A			B	1	
423	GS	A-6	———	B	C	———	2	A			4				2	A			2	A			C	10'-0"	
424	GS	A-6	———	B	C	———	2	A	4		2	A			2	A			2	A			C	10'-0"	
425	GS	A-6	———	B	C	———	2	A	4		4				2	A			2	A			C	10'-0"	
426	GS	A-6	———	B	C	———	2	A	4		2	A	4		2	A			2	A			C	10'-0"	
427	SEMINAR	A-6	———	B	C	———	2	A	4		2	A	4		2	A			2	A			C	10'-0"	
428	HALL	A-6	———	B	C	———	2	A	4		2	A	4										B	1	
429	GS	A-6	———	B	C	———	5	A			5	A			2	A			5	A			B	1	
430	GS	A-6	———	B	C	———	5	A			5	A			2	A			5	A			B	1	
431	SEMINAR	A-6	———	B	C	———	2	A	4		4				2	A			2	A			C	10'-0"	
432	HALL	A-6	———	B	C	———									5	A			5	A			B	1	
433	STUDY	A-6	———	B	C	———	2	A	4	5	4				4				3				B	1	
434	HALL	A-6	———	B	C	———									4				2	A			B	1	
435	SEMINAR	A-6	———	B	C	———	2	A			2	A			4				4				C	10'-0"	
436	SEMINAR	A-6	———	B	C	———	2	A			2	A			4				4				C	10'-0"	
437	SEMINAR	A-6	———	B	C	———	2	A			2	A			4				4				C	10'-0"	
438	JANITOR	A-6	———	C	A	———	2				2				2				2				B		
439	ELECTRICAL	A-6	———	C	A	———	3	A			2	A			2	A							B		SEE ELECTRICAL DRAWINGS
440	MECHANICAL	A-6	———	C	A	———	3	A			2	A			3	A			2	A			B		SEE MECHANICAL DRAWINGS
441	PLUMBING CHASE	A-5,6	———	C	———	———																			SEE PLUMBING DRAWINGS
442	OFFICE	A-6	———	B	C	———	4	A			2	A			2	A			3				C	10'-0"	AT RARE BOOK AREA

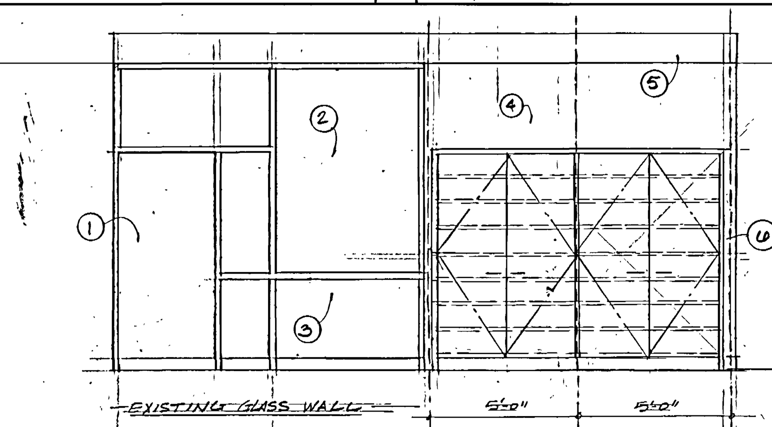

A A-26 INTERIOR ELEVATION @ LEVEL TWO CORRIDOR
SCALE 1/4" = 1'-0"

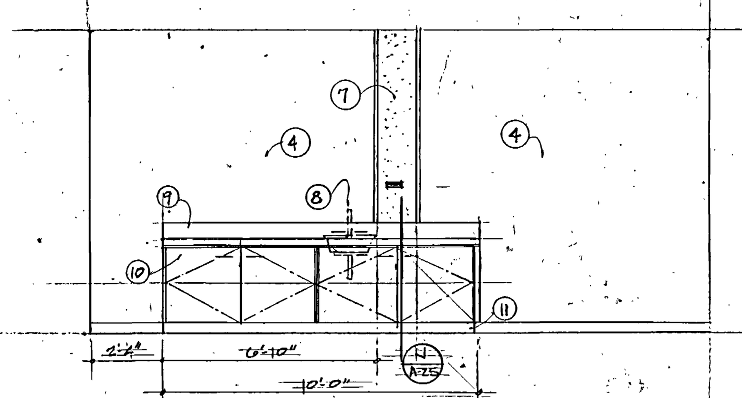

C A-26 INTERIOR ELEVATION @ LEVEL TWO
SCALE 1/4" = 1'-0"

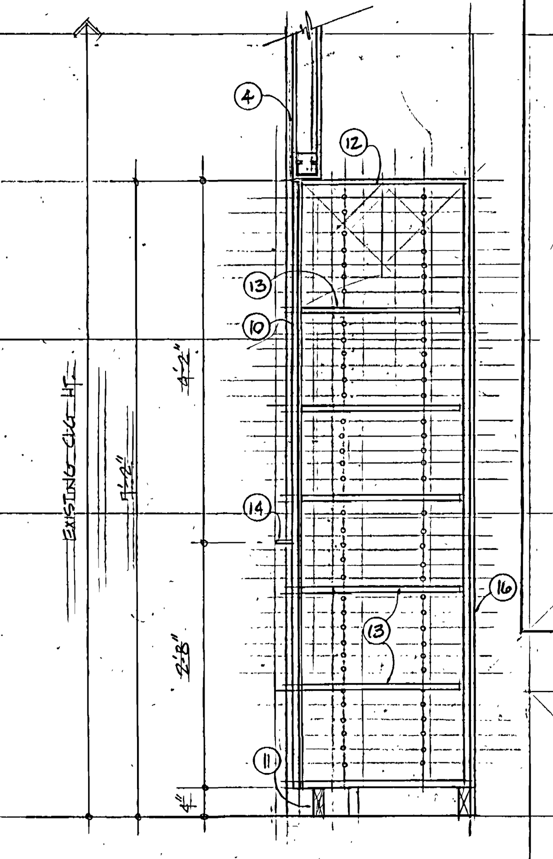

B A-26 SECTION OF CABINET - LEVEL TWO
Scale 3/4" = 1'-0"

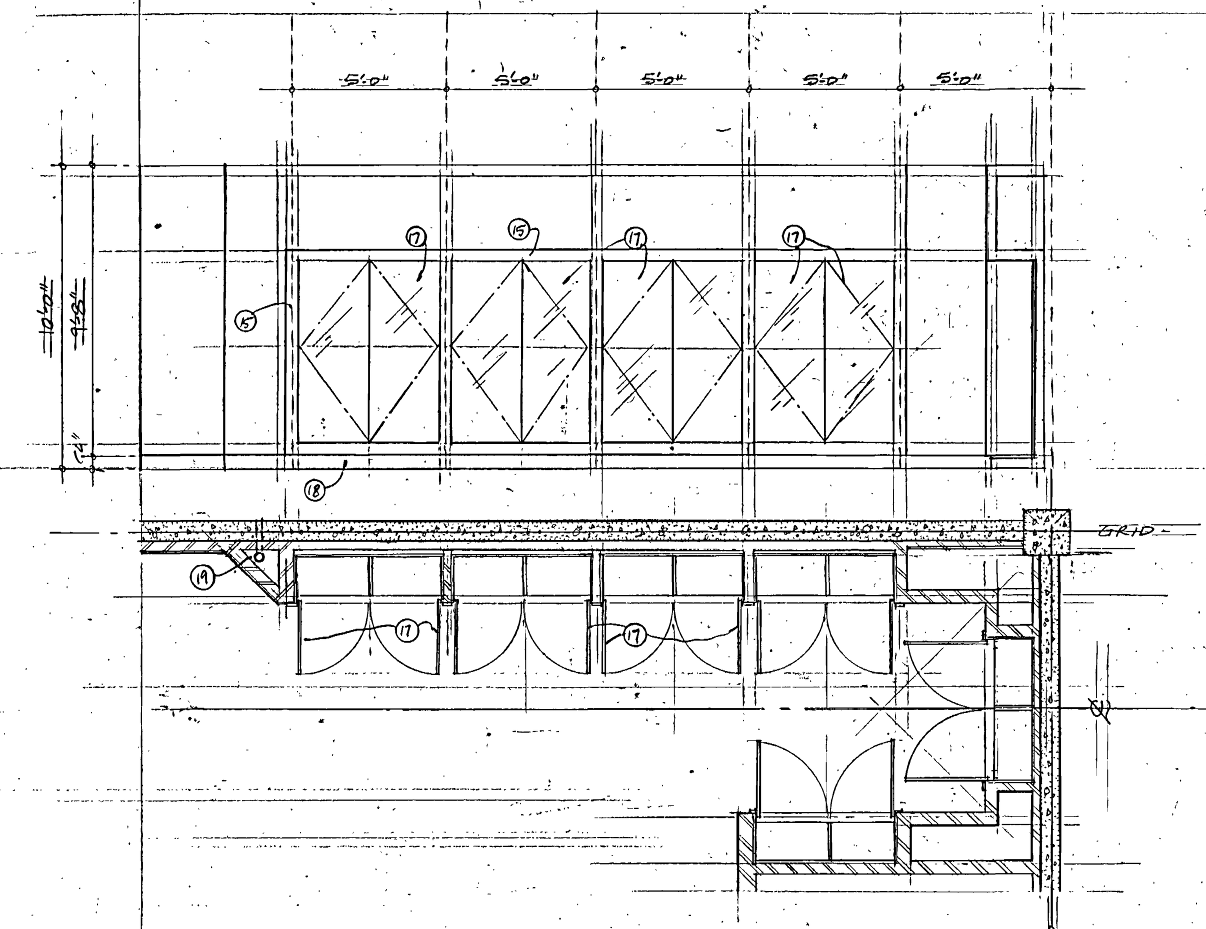

D A-26 PLAN & ELEVATION - BOOKSHELF - RARE BOOK COLLECTION
SCALE 1/4" = 1'-0"

0000AQA26
Utah Valley Community College, Learning Resource Center - RV 90-014
Finish Schedule - 7233

AS BUILTS

UTAH VALLEY COMMUNITY COLLEGE LEARNING RESOURCE CENTER/LIBRARY ADDITION

RAL ENGINEER : Bsumek Mu and Associates
MECHANICAL ENGINEER : VanBoerum and Frank
ELECTRICAL ENGINEER : Becherer Nielson and Associates
LANDSCAPE ARCHITECT : MGB and Associates
INTERIOR DESIGNER : Don Harward

DRAWN BY: AN + KRP
CHECKED BY: WMB

MONSEN ENGINEERING CO. 108657

STATE OF UTAH — SCOTT, LOUIE & BROWNING — P.E. 1148 ARCH. 239 ARCH. 432 — Salt Lake City — LICENSED ARCHITECTS & ENGINEERS

Scott, Louie and Browning
architects, engineers, planners
4766 Holladay Boulevard, Salt Lake City, Utah 84117

FINISH SCHEDULE

Utah Valley Community College
Learning Resource Center/Library Addition
Orem, Utah DFCM Project No. RV:90-014

A-26

FEB. 18, 1991

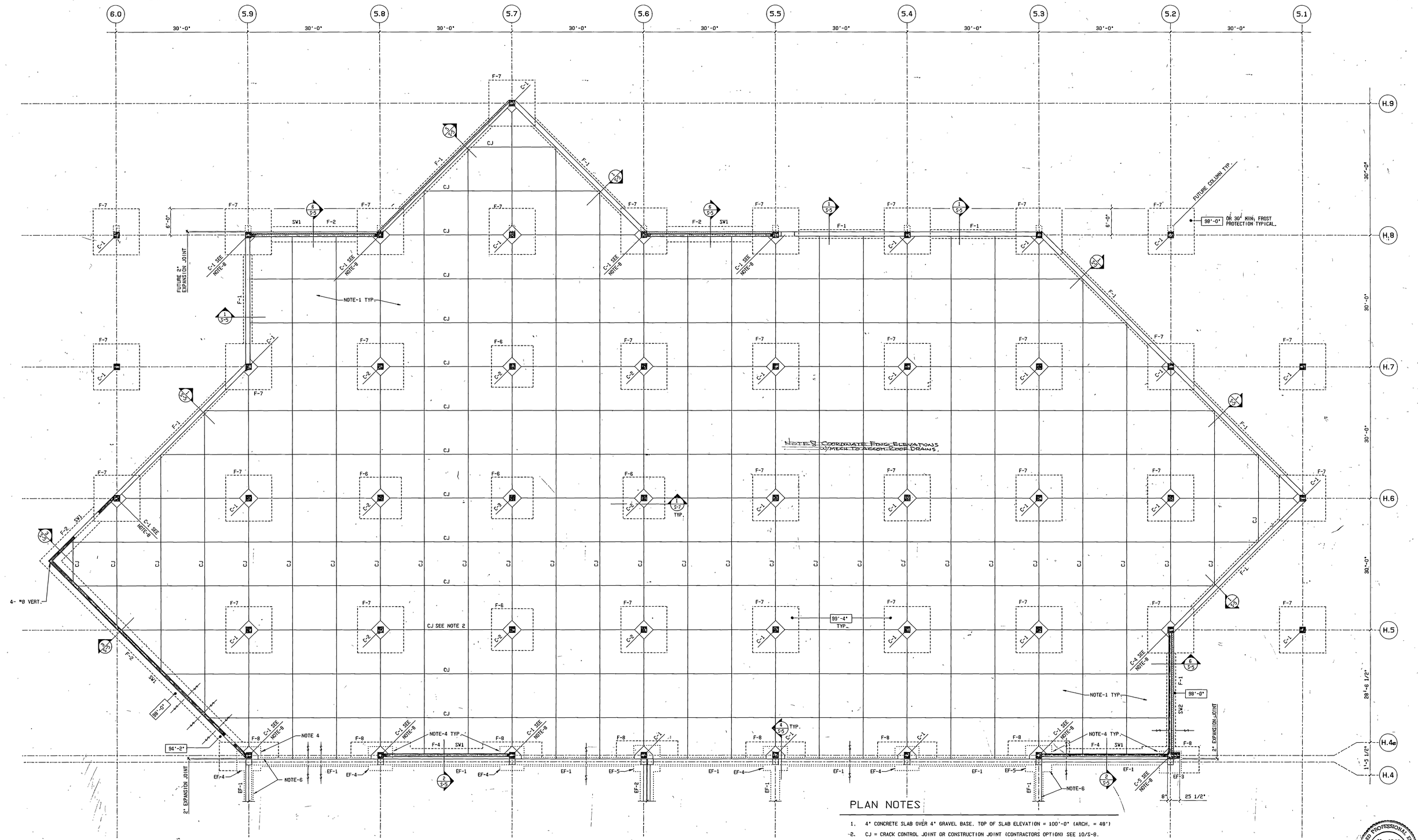

PLAN NOTES

1. 4" CONCRETE SLAB OVER 4" GRAVEL BASE. TOP OF SLAB ELEVATION = 100'-0" (ARCH. = 48')
2. CJ = CRACK CONTROL JOINT OR CONSTRUCTION JOINT (CONTRACTORS OPTION) SEE 10/S-8.
3. TOP OF FOOTING ELEVATIONS SHOWN THUS 98'-0" TYPICAL U.N.O. SEE PLAN.
4. EPOXY DOWEL ALL LENGTHWISE REINFORCING INTO EXISTING CONCRETE FOOTINGS TYPICAL.
5. SEE SHEET S-7 FOR CONCRETE FOOTING AND CONCRETE COLUMN SCHEDULES TYPICAL.
6. EXISTING STRUCTURE. FIELD VERIFY EXISTING CONDITIONS TYPICAL.
7. TYPICAL SUBGRADE PREPARATION UNDER ALL NEW FOOTINGS SEE SECTION 1/S-9 TYPICAL.
8. VERTICAL COLUMN REINFORCING REQUIRES 1.7 ld SPLICE SEE COLUMN SCHEDULE ON SHEET S-7.

NORTH

FOOTING AND FOUNDATION PLAN (ELEV. 48')

SCALE: 1/8"= 1'-0"

0000AQS1
Utah Valley Community College, Learning Resource Center - RV 90-014
Footing and Foundation Plans - 7234

AS BUILTS

REGISTERED PROFESSIONAL ENGINEER No. 4046 REINHARDT BSUMEK STATE OF UTAH

UTAH VALLEY COMMUNITY COLLEGE LEARNING CENTER/LIBRARY ADDITION

FOOTING AND FOUNDATION PLAN

STRUCTURAL ENGINEER	:Bsumek Mu and Associates
MECHANICAL ENGINEER	:VanBoerum and Frank
ELECTRICAL ENGINEER	:Becherer Nielson and Associates
LANDSCAPE ARCHITECT	:MGB and Associates
INTERIOR DESIGNER	:Don Harward

DRAWN BY: Dale
CHECKED BY: Kevin

Scott, Loule and Browning
architects, engineers, planners
2700 Hillside Boulevard, Salt Lake City, Utah 84117

Utah Valley Community College
Learning Resource Center/Library Addition
Orem, Utah DFCM Project No. RV:90-014

S-1
Feb. 18, 1991

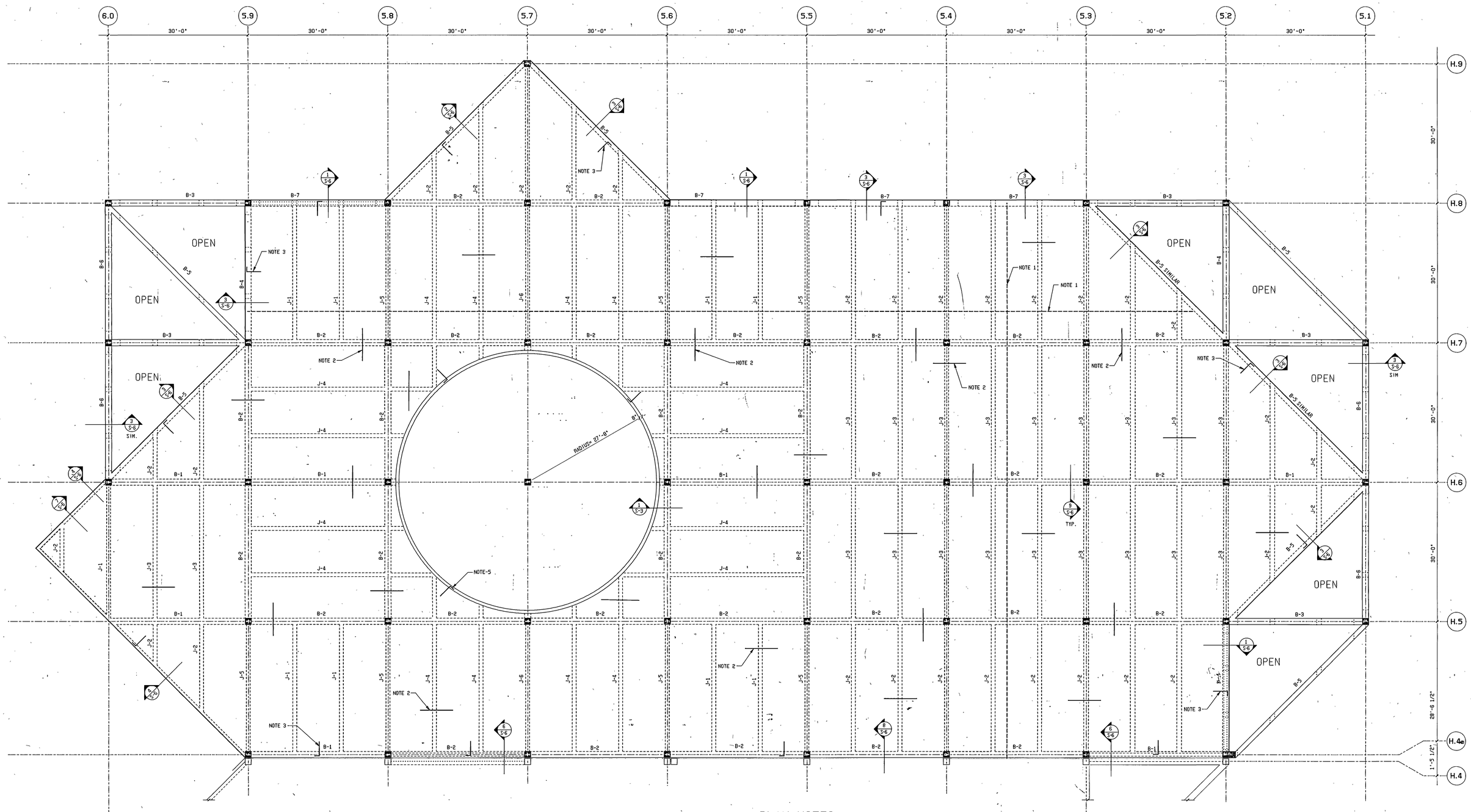

PLAN NOTES

1. 4 1/2" CONCRETE SLAB/ REINFORCE WITH #4 AT 18"oc EACH WAY BOTTOM TYPICAL. SHORT DISTANCE BARS WILL BE 3/4" CLEAR FROM BOTTOM TYPICAL. FINISHED FLOOR ELEVATION= 63'-0" U.N.O.
2. #4x 7'-0" AT 12"oc WITH 4- #4 LENGTH WISE TYPICAL OVER BEAMS AND JOISTS. ALL BARS WILL BE 3/4" CLEAR FROM TOP. MAXIMUM. TYPICAL.
3. #4 SLAB DOWELS 3'-6" 12" AT 12"oc TYPICAL TOP. WITH 2- #4 CONTINUOUS LENGTH WISE. ALL BARS WILL BE 3/4" CLEAR FROM TOP. MAXIMUM TYPICAL.
4. DESIGNED FOR FUTURE VERTICAL EXPANSION - CONCRETE FRAME 2ND STORY WITH STEEL ROOF HORIZONTAL EXPANSION WILL BE VIA NEW COLUMNS AND SHEAR WALLS ETC. OPEN SPACES DESIGNED TO BE FILLED IN FUTURE. EXCEPT BIG CIRCLE.
5. #4 SLAB DOWELS 5'-6" 1'-6" AT 12"oc. TOP AND BOTTOM. SEE SECTION 1/S-3.

NORTH

PRESENT ROOF. FUTURE 2nd FLOOR FRAMING PLAN (ELEV. 63'-0")

SCALE: 1/8"= 1'-0"

0000AQS2
Utah Valley Community College; Learning Resource Center
RV 90-014
Roof Framing Plans - 7235

AS BUILTS

REGISTERED PROFESSIONAL ENGINEER
No. 4046
REINHARDT BSUMEK
STATE of UTAH

UTAH VALLEY COMMUNITY COLLEGE LEARNING CENTER/LIBRARY ADDITION

FOOTING AND FOUNDATION PLAN

STRUCTURAL ENGINEER	:Bsumek Mu and Associates
MECHANICAL ENGINEER	:VanBoerum and Frank
ELECTRICAL ENGINEER	:Becherer Nielson and Associates
LANDSCAPE ARCHITECT	:MGB and Associates
INTERIOR DESIGNER	:Don Harward

DRAWN BY: David
CHECKED BY: Kevin

Scott, Louie and Browning
architects, engineers, planners
4765 Holladay Boulevard, Salt Lake City, Utah 84117

Utah Valley Community College
Learning Resource Center/Library Addition
Orem, Utah DFCM Project No. RV:90-014

S-2
Feb. 18, 1991

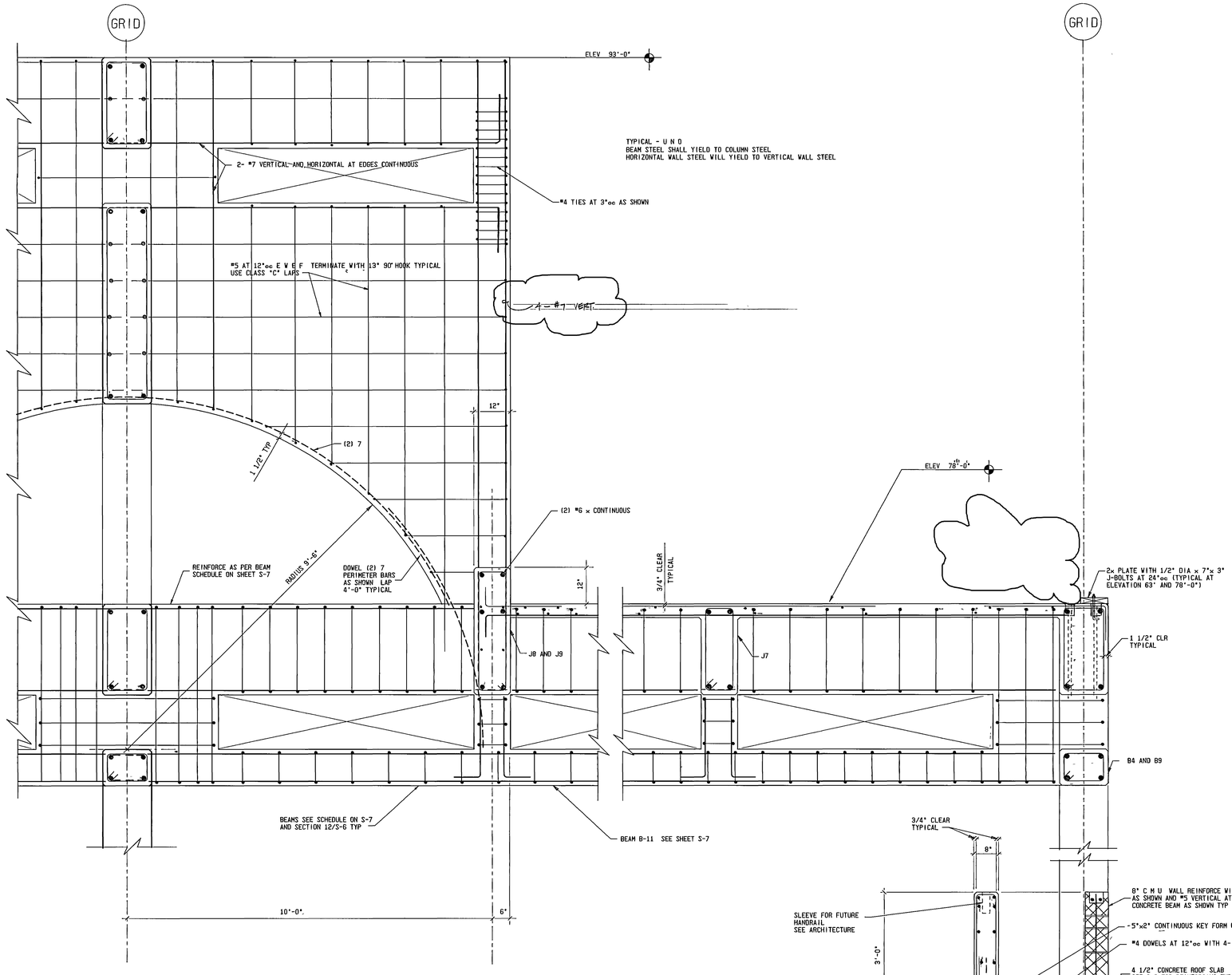

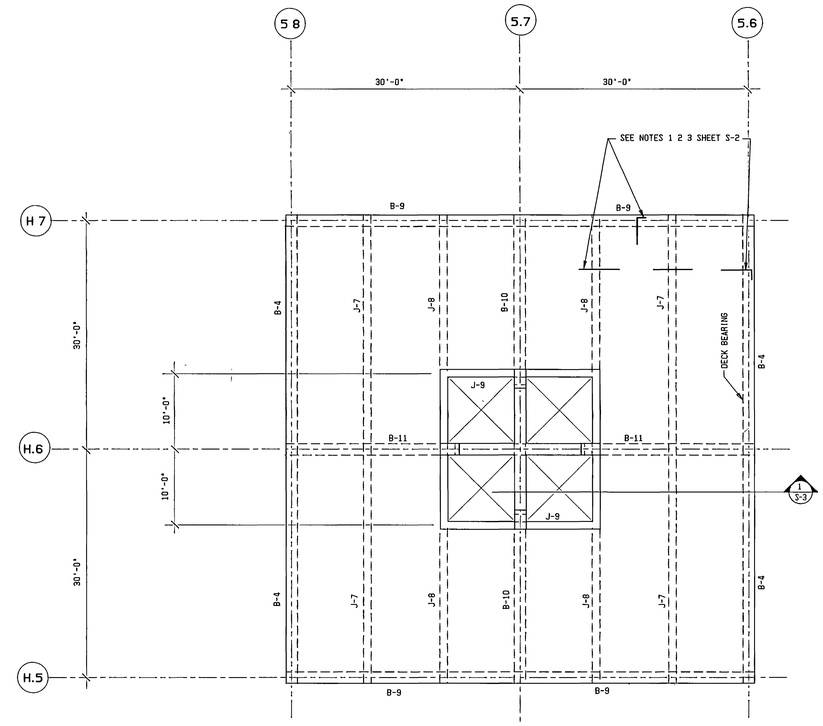

ELEVATION 78'-0" FRAMING PLAN

SCALE: 1/8" = 1'-0" SEE S-7 FOR SCHEDULE

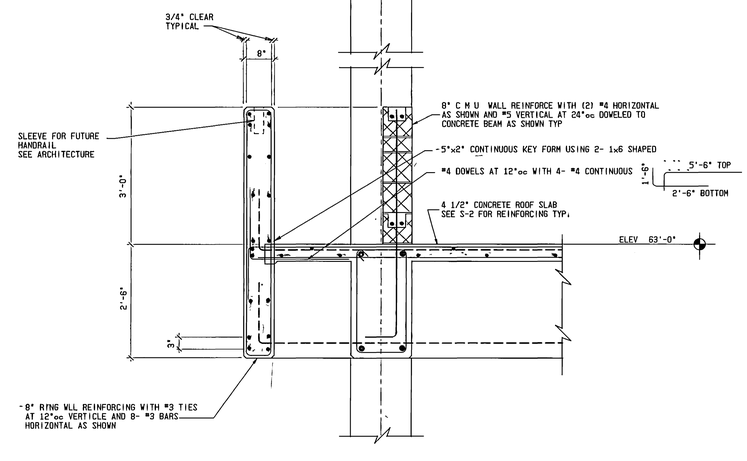

SECTION 1/S-3

SCALE 3/4"= 1'-0"

AS BUILTS

REGISTERED PROFESSIONAL ENGINEER No 4046 REINHARDT BSUMEK STATE of UTAH

0000AQS3
Utah Valley Community College, Learning Resource Center -
RV 90-014
Structural Section Thru Skylite - 7236

UTAH VALLEY COMMUNITY COLLEGE LEARNING CENTER/LIBRARY ADDITION

SKYLIGHT FRAMING

STRUCTURAL ENGINEER	:Bsumek Mu and Associates
MECHANICAL ENGINEER	VanBoerum and Frank
ELECTRICAL ENGINEER	Becherer Nielson and Associates
LANDSCAPE ARCHITECT	MGB and Associates
INTERIOR DESIGNER	.Don Harward

DRAWN BY David
CHECKED BY Reln

Scott, Louie and Browning
architects, engineers, planners
4765 Holladay Boulevard Salt Lake City Utah 84117

Utah Valley Community College
Learning Resource Center/Library Addition
Orem, Utah DFCM Project No. RV:90-014

S-3

Feb. 18, 1991

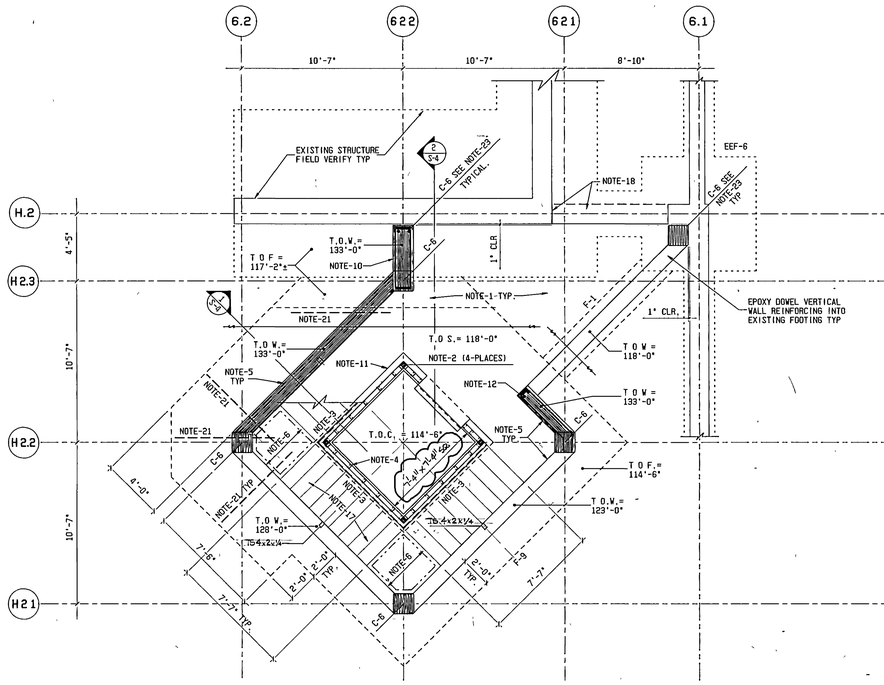

STAIR TOWER FOOTING AND FOUNDATION PLAN AT 118'

SCALE· 1/4"= 1'-0"

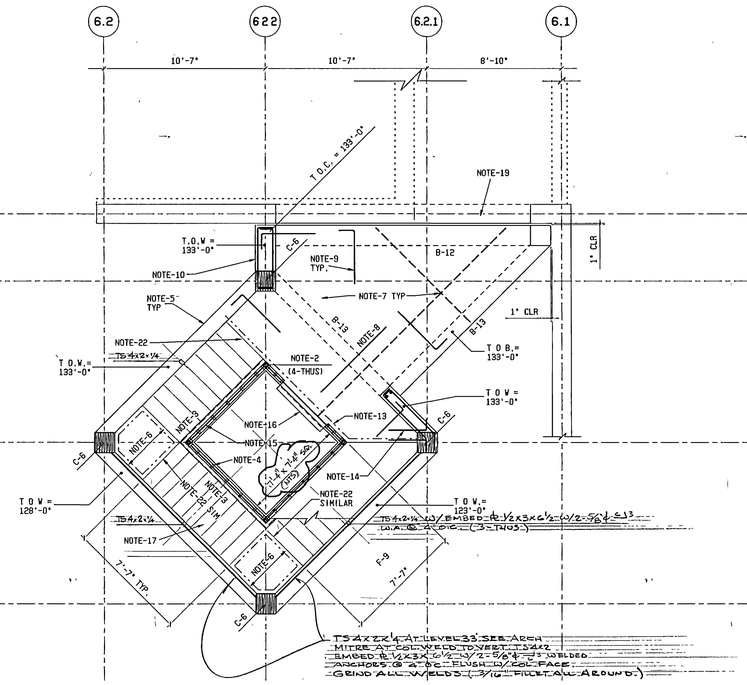

STAIR TOWER FRAMING PLAN AT 133'

SCALE: 1/4"= 1'-0"

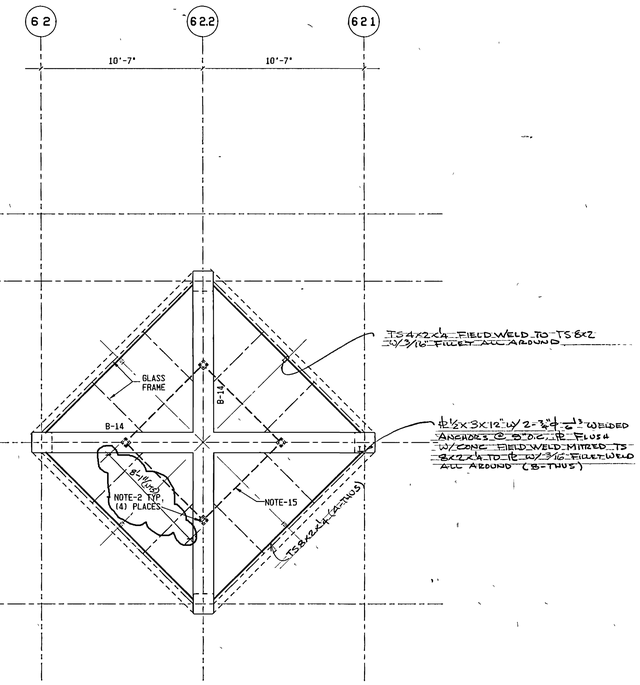

STAIR TOWER ROOF FRAMING PLAN

SCALE. 1/4"= 1'-0"

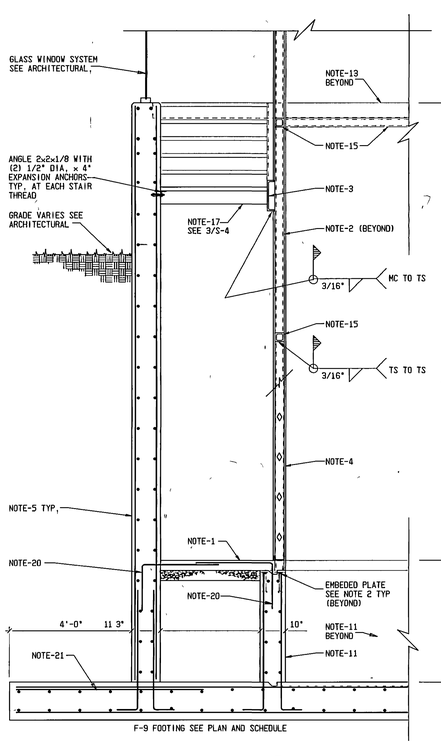

F-9 FOOTING SEE PLAN AND SCHEDULE

SECTION 1 / S-4

SCALE 1/2"= 1'-0"

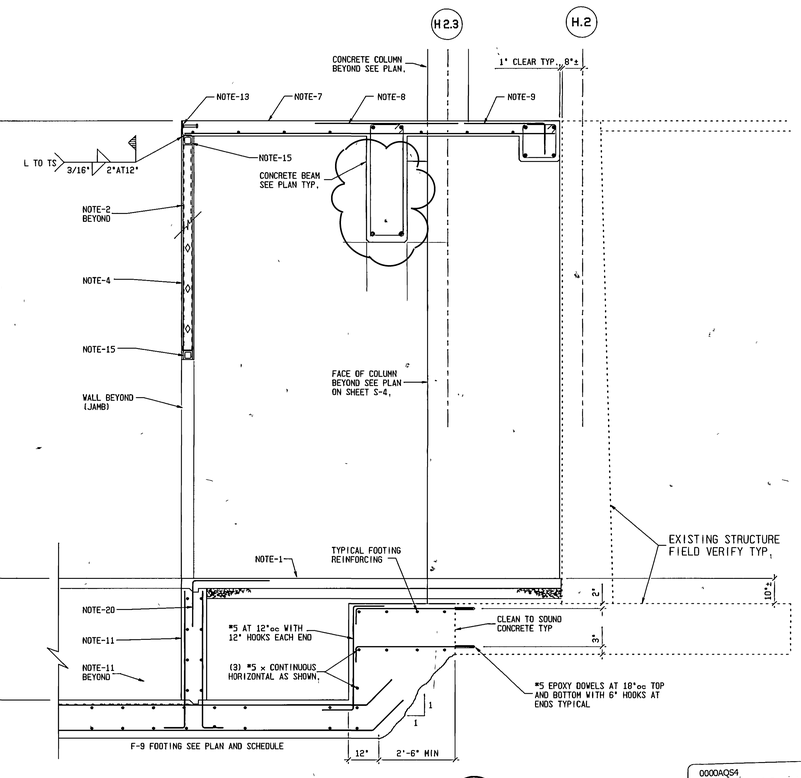

F-9 FOOTING SEE PLAN AND SCHEDULE

SECTION 2 / S-4

SCALE 1/2"= 1'-0"

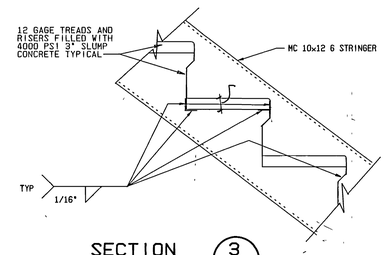

SECTION 3 / S-4

SCALE NTS =

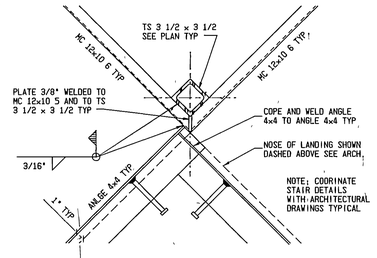

SECTION 4 / S-4

SCALE 1 5"= 1'-0"

PLAN NOTES

1 4" CONCRETE SLAB OVER 4" GRAVEL, TOP OF SLAB = 118'-0" TYPICAL U N O SEE STAIR TOWER FOOTING AND FOUNDATION PLAN

2. TS 3 1/2 x 3 1/2 x 3/8" CONTINUES UP FROM 117'-0" TO 143'-0" AT BOTTOM WELD TS TO EMBEDED PLATE 3/4"x10"x16" WITH (4) 3/4" DIA. x 12" WELDED ANCHORS AT 6"oc AND AT TOP WELD TO EMBEDED PLATE 3/8"x4"x4" WITH (2) 1/2" DIA x 6"x2" BENT WELDED ANCHORS AT 4 1/2" o.c., WELD TS TO PLATES WITH 3/16" FILLET WELD ALL AROUND TYPICAL U N O

3 MC 12x10 6 STAIR STRINGER WELDED TO TS 3 1/2 x 3 1/2 SEE STAIR TOWER FOOTING AND FOUNDATION PLAN AND FRAMING PLAN (3-SIDES)

4 C3 5/8" x 18 GAGE STEEL STUDS AT 16"oc AND AS SHOWN WITH 5/8" GYP BOARD EACH SIDE WITH 16 GAGE x CONT. TRACK TOP AND BOTTOM. WELD TRACK TO HORIZONTAL TS's AND ATTACH TO CONC. AS PER 5/S-5.

5 11 3" WIDE CONCRETE WALL REINFORCE WITH (4) *6 AT TOP OF WALL (1±1 (2) BARS 2" FROM TOP OF WALL AT 7"oc AND 2nd (2) BARS 14" FROM TOP OF WALL) AND WITH *4 AT 12"oc EACH WAY INSIDE FACE AND WITH *5 EACH WAY OUTSIDE FACE, LAP VERTICAL REINFORCING 3'-0" ABOVE FOOTING TYPICAL U N.O.,

6 4" CONCRETE SLAB OVER 1 1/2" x 20 GAGE GALVANIZED STEEL DECK PROVIDE DECK BEARING ANGLE 4x4x1/4 ALL AROUND LANDING ATTACH DECK BEARING ANGLE TO CONCRETE WALL WITH 3/4" DIAMETER x 6" EXPANSION ANCHORS AT 18"oc WITH (2) AT 6"oc AT ENDS. WELD ANGLE 4x4 TO MC 10x12 6 SEE 4/S-4 PROVIDE 1/2" DIAMETER x 8" WELDED ANCHORS AT 18"oc WELDED 1" DOWN FROM TOP OF SLAB TO VERTICAL LEG OF ANGLE 4x4 MITRE ALL CORNERS AND WELD ALL SPLICES FULL STRENGTH TYP U N.O

7 6" SUSPENDED CONCRETE SLAB REINFORCED WITH *4 AT 18"oc EACH WAY 1" CLEAR UP FROM BOTTOM OF SLAB TOP OF SLAB = 133'-0" TYP.

8 *4 x 6'-0" AT 12" o.c. CENTERED OVER CONCRETE BEAMS 1" DOWN FROM TOP OF CONCRETE SLAB TYPICAL U.N.O.

9 *4 x 2'-6" x 12" SLAB DOWELS AT 12" oc 1" DOWN FROM TH TOP OF CONCRETE SLAB TYPICAL U N O

10. 16" CONCRETE WALL REINFORCED WITH *4 AT 9" oc EACH WAY EACH FACE AND LAP ALL VERTICAL REINFORCING 3'-0" ABOVE FOOTING. EPOXY DOWEL ALL VERTICAL REINFORCING INTO EXISTING FOOTING

11. 10" CONCRETE FOUNDATION WALL REINFORCED WITH *4 AT 12"oc EACH WAY EACH FACE TYPICAL U N O.

12 PROVIDE (2) *8 VERTICAL DOWELED TO FOOTING AT END OF WALL.

13. ANGLE 6x6x3/8 WITH 3/4" DIA x 6" WELDED ANCHORS AT 12" o.c WELDED TO 6" VERTICAL LEG OF L6x4 WELD ANGLE 6x4 TO C12 x 20.7 AND TS 3 1/2 x 3 1/2 AND EXTEND ANGLE 6x4 1 1/2" INTO CONCRETE COLUMN AND 3" INTO CONCRETE WALL

14 PROVIDE (4) SLAB DOWELS (2-ABOVE AND 2-BELOW) AT 6" o c, HORIZONTALLY AND 4" o c VERTICALLY.

15 PROVIDE HORIZONTAL TS 3 1/2 x 3 1/2 x 1/4 ALL AROUND WELDED TO VERTICAL TS's TOP OF HORIZONTAL TS FOR UPPER LANDING AT (133'-0") IS 132'-6" COORDINATE WITH ARCHITECTURAL AND ELEVATOR SUPPLIER TYPICAL.

16 ANGLE AS REQUIRED BY ELEVATOR CONTRACTOR. WELD ANGLE TO HORIZONTAL TS 3 1/2 x 3 1/2

17 12 GAGE PANS AND RISERS WELDED TO MC 12x10.6 AND ANGLE 2x2x1/8 SEE SECTIONS 1/S-4 AND 3/S-4 COORDINATE WITH ARCITECTURAL TYP.

18 SAW CUT NEW OPENING. TOP OF NEW OPENING = 110'-4" AND BOTTOM OF NEW OPENING = 117'-8" POUR NEW 4" CONCRETE SLAB OVER BOTTOM CUT OF NEW OPENING. DO NOT OVER CUT CORNERS OF NEW OPENING.

19. SAW CUT TOP OF EXISTING WALL -4" AND POUR NEW 4" CONCRETE SLAB OVER TOP OF EXISTING WALL

20. *4 SLAB DOWELS 2'-6" x 18" AT 12"oc 3/4" CLEAR FROM TOP OF SLAB TYPICAL U N O.

21. PROVIDE *5 x 6'-0" AT 12"oc 2" CLEAR FROM TOP OF FOOTING. TYPICAL WHERE FOOTING EXTENDS 4'-0" PAST OUTSIDE FACE OF WALL.

22

23. EPOXY DOWEL VERTICAL COLUMN REINFORCING INTO EXISTING FOOTING.

AS BUILTS

REGISTERED PROFESSIONAL ENGINEER No 4046 REINHARDT BSUMEK STATE of UTAH

0000AQS4
Utah Valley Community College, Learning Resource Center - RV 90-014
Star Tower - 7237

UTAH VALLEY COMMUNITY COLLEGE LEARNING CENTER/LIBRARY ADDITION

STAIR TOWER

STRUCTURAL ENGINEER	Bsumek Mu and Associates
MECHANICAL ENGINEER	VanBoerum and Frank
ELECTRICAL ENGINEER	Becherer Nielson and Associates
LANDSCAPE ARCHITECT	MGB and Associates
INTERIOR DESIGNER	Don Harward

DRAWN BY Dale
CHECKED BY Kevin

Scott, Louie and Browning
architects, engineers, planners
4700 Holladay Boulevard Salt Lake City Utah 84117

Utah Valley Community College
Learning Resource Center/Library Addition
Orem, Utah DFCM Project No. RV-90-014

S - 4

Feb. 18, 1991

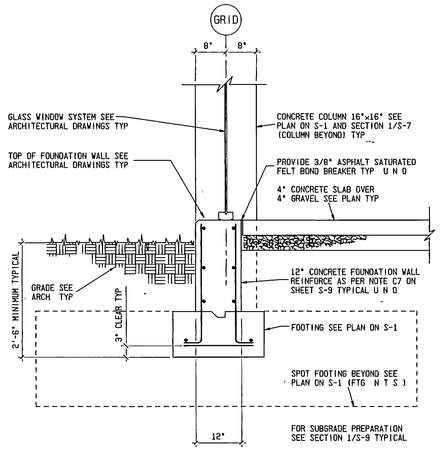

SECTION 1 / S-5
SCALE 3/4"= 1'-0"

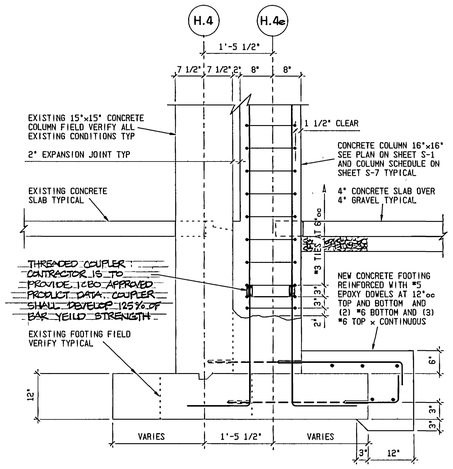

SECTION 4 / S-5
SCALE 3/4"= 1'-0"

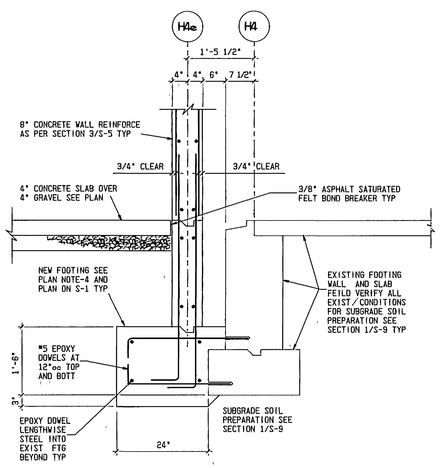

SECTION 2 / S-5
SCALE 3/4"= 1'-0"

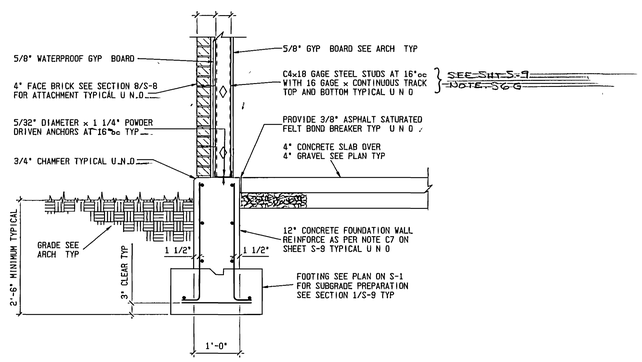

SECTION 5 / S-5
SCALE 3/4"= 1'-0"

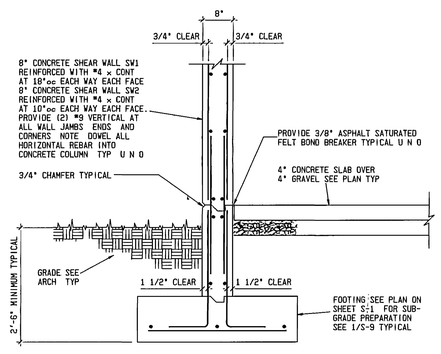

SECTION 3 / S-5
SCALE 3/4"= 1'-0"

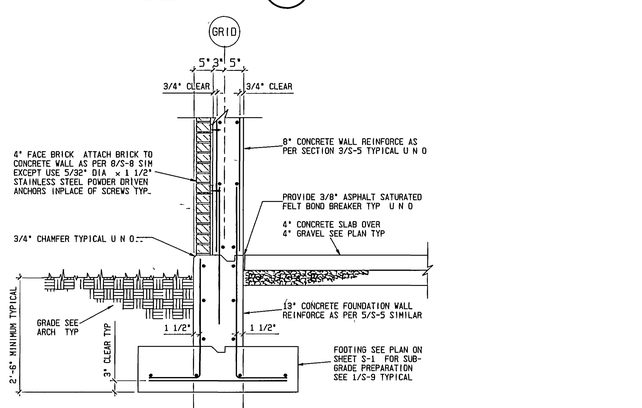

SECTION 6 / S-5
SCALE 3/4"= 1'-0"

0000AQSS
Utah Valley Community College, Learning Resource Center - RV 90-014
Structural Details - 7238

AS BUILTS

REGISTERED PROFESSIONAL ENGINEER No. 4046 HEINHARD BSUMEK STATE of UTAH

UTAH VALLEY COMMUNITY COLLEGE LEARNING CENTER/LIBRARY ADDITION

STRUCTURAL DETAILS

STRUCTURAL ENGINEER	Bsumek Mu and Associates
MECHANICAL ENGINEER	VanBoerum and Frank
ELECTRICAL ENGINEER	Becherer Nielson and Associates
LANDSCAPE ARCHITECT	MGB and Associates
INTERIOR DESIGNER	Don Harward

DRAWN BY Dale
CHECKED BY Kevin

Scott, Louie and Browning
architects, engineers, planners
4780 Holladay Boulevard Salt Lake City Utah 84117

Utah Valley Community College
Learning Resource Center/Library Addition
Orem, Utah DFCM Project No. RV:90-014

S-5
Feb. 18, 1991

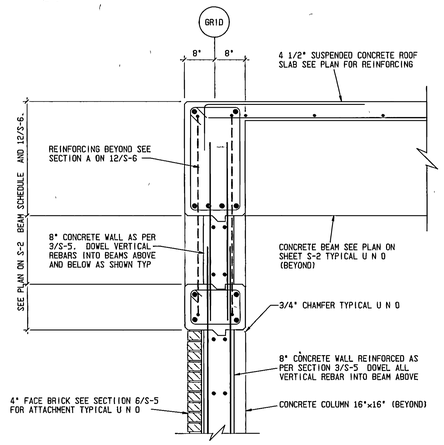

SECTION 1 S-6
SCALE 3/4"= 1'-0"

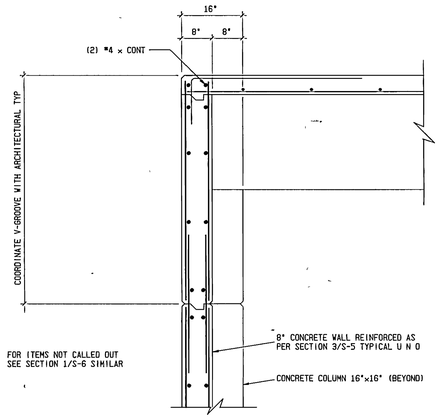

SECTION 4 S-6
SCALE 3/4"= 1'-0"

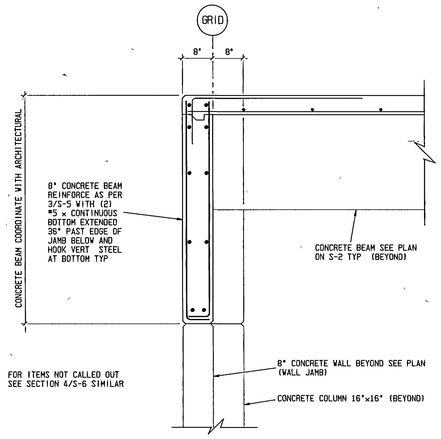

SECTION 7 S-6
SCALE 3/4"= 1'-0"

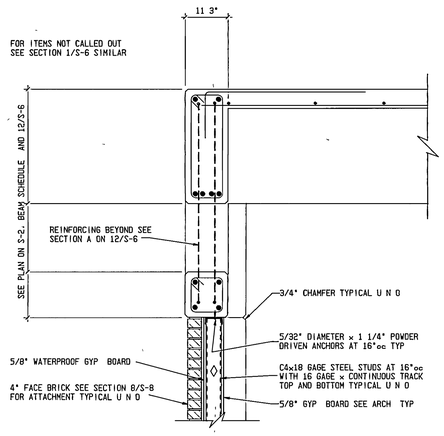

SECTION 2 S-6
SCALE 3/4"= 1'-0"

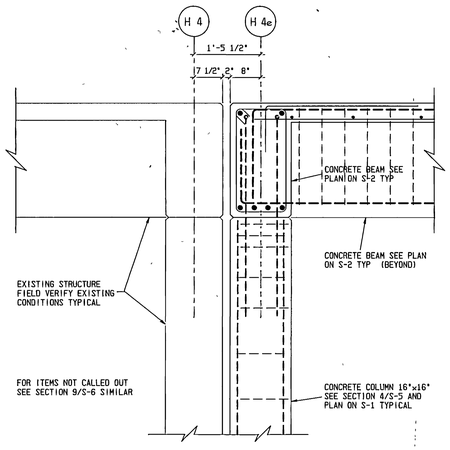

SECTION 8 S-6
SCALE 3/4"= 1'-0"

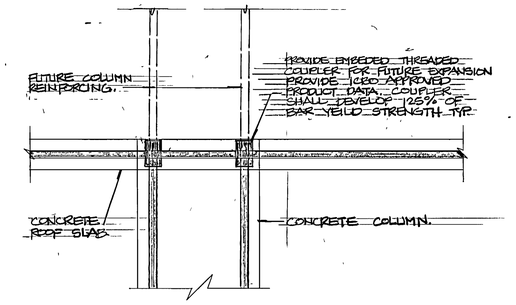

SECTION 10 S-6
SCALE NTS = 1'-0"

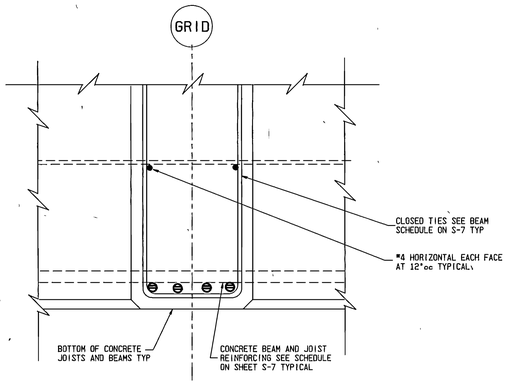

SECTION 11 S-6
SCALE NTS = 1'-0"

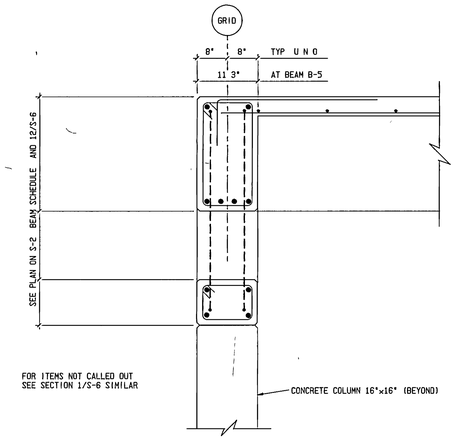

SECTION 3 S-6
SCALE 3/4"= 1'-0"

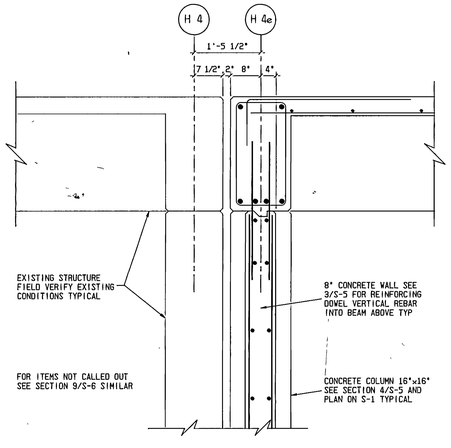

SECTION 6 S-6
SCALE 3/4"= 1'-0"

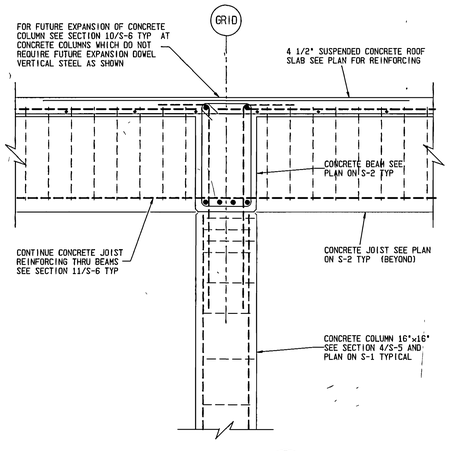

SECTION 9 S-6
SCALE 3/4"= 1'-0"

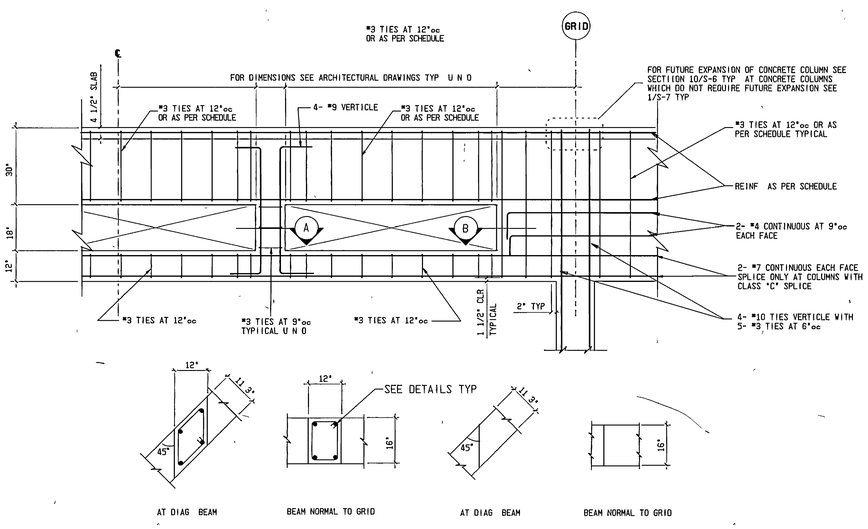

ELEVATION OF TYPICAL REINFORCEMENT IN SLOTTED BEAMS

0000AQS6
Utah Valley Community College, Learnng Resource Center
RV 90-014
Structural Details - 7239

SECTION 12 S-6
SCALE NTS = 1'-0"

AS BUILTS

REGISTERED PROFESSIONAL ENGINEER No 4046 REINHARDT BSUMEK STATE OF UTAH

UTAH VALLEY COMMUNITY COLLEGE LEARNING CENTER/LIBRARY ADDITION

STRUCTURAL DETAILS

STRUCTURAL ENGINEER	Bsumek Mu and Associates
MECHANICAL ENGINEER	VanDoerum and Frank
ELECTRICAL ENGINEER	Becherer Nielson and Associates
LANDSCAPE ARCHITECT	MGB and Associates
INTERIOR DESIGNER	Don Harward

DRAWN BY Dale
CHECKED BY Kevin

Scott, Louie and Browning
architects, engineers, planners
4765 Holladay Boulevard Salt Lake City Utah 84117

Proj: Utah Valley Community College
Learning Resource Center/Library Addition
Orem, Utah DFCM Project No. RV:90-014

S-6

Feb. 18, 1991

BEAM SCHEDULE

BEAM			REINFORCEMENT			NOTES	TIES			
MARK	Width	Depth	No.	Size	Type		Size	Type	End	Spacing From Support
B-1	16"	30"	2	#11	H1	HOOK AT EXTERIOR COLUMN	#4	☐	EACH	15 AT 7" AND
			3	#11	01	OVER INTERIOR COLUMN				REMAINING AT 12"oc
			2	#10	H	HOOK AT EXTERIOR COLUMN				
			2	#10	0					
			2	#10	02					
B-2	16"	30"	6	#11	01	THREE AT EACH END	#4	☐	EACH	15 AT 7" AND
			2	#10	0					REMAINING AT 12"oc
			4	#10	02					
B-3	16"		2	#11	H2	HOOK AT EXTERIOR COLUMN	#3	☐	EACH	SEE ELEVATION 12/S-6
			2	#11	H	HOOK AT EXTERIOR COLUMN				
			2	#11	02					
B-4	16"		2	#11	H2	HOOK AT EXTERIOR COLUMN	#3	☐	EACH	SEE ELEVATION 12/S-6
			2	#11	H	HOOK AT EXTERIOR COLUMN				
B-5	11 3"		2	#11	H2	HOOK AT EXTERIOR COLUMN	#3	☐	EACH	SEE ELEVATION 12/S-6
			2	#11	H	HOOK AT EXTERIOR COLUMN				
			2	#10	02					
B-6	16"		2	#11	H2	HOOK AT EXTERIOR COLUMN	#3	☐	EACH	SEE ELEVATION 12/S-6
			2	#11	H	HOOK AT EXTERIOR COLUMN				
			2	#10	02					
B-7	16"		4	#11	01	TWO AT EACH END	#3	☐	EACH	SEE ELEVATION 12/S-6
			2	#11	0					
			2	#11	02					
B-8										
B-9	16"		2	#11	H2	HOOK AT EXTERIOR COLUMN	#3	☐	EACH	SEE ELEVATION 12/S-6
			2	#11	H	HOOK AT EXTERIOR COLUMN				
B-10	16"		2	#10	H2	HOOK AT EXTERIOR COLUMN	#3	☐	EACH	SEE ELEVATION 12/S-6
			2	#10	H	HOOK AT EXTERIOR COLUMN				
			1	#9	03					
			1	#9	04					
B-11	16"		3	#10	H2	HOOK AT EXTERIOR COLUMN	#4	☐	EACH	SEE SECTION 1/S-3
			3	#10	H	HOOK AT EXTERIOR COLUMN				
			1	#11	03					
			1	#11	04					
B-12	16"	16"	2	#8	2H		#3	☐	EACH	AT 12"oc
			2	#8	2H1					
B-13	11 3"	60"	2	#10	2H		#3	☐	EACH	AT 12"oc
			2	#8	2H1					
B-14	16"	60"	2	#11	2H		#3	☐	EACH	AT 12"oc
			2	#8	0	12"oc				
			2	#8	2H1					

BEAM SCHEDULE CONT

J-1	12"	30"	2	#8	2H		#3	☐	EACH	12"oc
			2	#8	02					
			4	#7	H1	TWO AT EACH END				
J-2	12"	30"	2	#8	H1	HOOK AT EXTERIOR COLUMN	#3	☐	EACH	12"oc
			2	#8	01	OVER INTERIOR COLUMN				
			2	#9	H	HOOK AT EXTERIOR COLUMN				
J-3	12"	30"	4	#8	01	TWO AT EACH END	#3	☐	EACH	12"oc
			2	#9	0					
J-4	12"	30"	2	#8	2H	BEAM STRUT FROM SKYLIGHT	#3	☐	EACH	12"oc
			2	#8	2H1					
			2	#8	02					
			2	#8	01	OVER GRID				
J-5	12"	30"	2	#8	H1	HOOK AT EXTERIOR COLUMN	#3	☐	EACH	12"oc
			2	#8	2H					
			2	#8	02					
			2	#8	01	OVER INTERIOR COLUMN				
J-6	12"	30"	4	#8	01	TWO AT EACH END	#3	☐	EACH	12"oc
			2	#8	H1	HOOK AT SKYLIGHT				
			2	#8	02					
J-7	12"	30"	2	#8	H1	HOOK AT EXTERIOR COLUMN	#3	☐	EACH	12"oc
			2	#8	H	HOOK AT EXTERIOR COLUMN				
			1	#9	01	OVER INTERIOR COLUMN				
J-8	12"	30"				SEE ELEVATION	#3	☐	EACH	12"oc SEE 1/6-3
			2	#8	H1	HOOK AT EXTERIOR COLUMN				
			2	#8	H	HOOK AT EXTERIOR COLUMN				
			1	#9	01	OVER INTERIOR COLUMN				
J-9	12"	30"				SEE ELEVATION	#3	☐	EACH	12"oc SEE 1/6-3
			2	#8	H2	HOOK AT J8				
			2	#8	H	HOOK AT J8				

SCHEDULE OF BAR TYPES

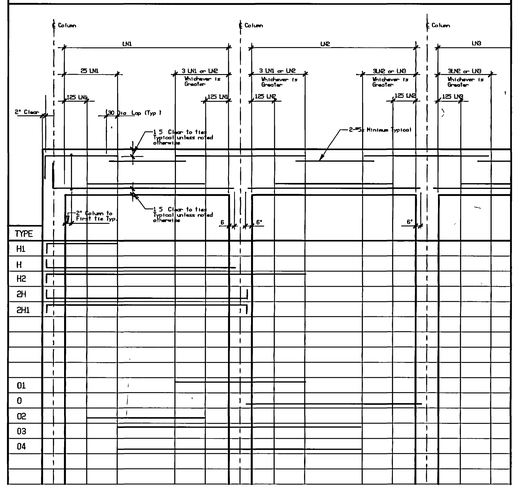

COLUMN SCHEDULE

MARK NUMBER	C-1	C-2	C-3	C-4	C-5	
COLUMN SIZE	16" x 16"	16" x 16"	16" x 16"	16" x 16"	16" x 33 1/2"	
ROOF						
BOTTOM OF BEAM LEVEL 2		1 AT 2" 3 AT 8" 4-#8 WITH #3 TIES AS SHOWN AT 16" 3 AT 8" 1 AT 2"	1 AT 2" 6 AT 8" 4-#8 WITH #3 TIES AS SHOWN			1 AT 2" TOP OF COL SEE PLAN AND ARCH
BOTTOM OF BEAM LEVEL 1	1 AT 2" 3 AT 8" 4-#8 WITH #3 TIES AS SHOWN AT 16" 3 AT 8" 1 AT 2"	1 AT 2" 3 AT 8" 4-#8 WITH #3 TIES AS SHOWN AT 16" 3 AT 8" 1 AT 2"	AT 16" 4-#8 WITH #3 TIES AS SHOWN 6 AT 8" 1 AT 2"	1 AT 2" 3 AT 8" 8-#10 WITH #3 TIES AS SHOWN AT 16" 3 AT 8" 1 AT 2"	1 AT 2" 3 AT 8" 8-#10 WITH #3 TIES AS SHOWN AT 16" 3 AT 8" 1 AT 2"	AT 6" TYP PROVIDE 1.7ld LAP TYPICAL 4-#8 WITH #3 TIES AS SHOWN 1 AT 2"
TOP OF FOOTING						

30 BAR DIAMETER LAP	1.7 ld LAP
#7 = 27" #8 = 30" #9 = 34" #10 = 39" #11 = 43"	#7 = 39" #8 = 51" #9 = 65" #10 = 82" #11 = 101"

FOOTING SCHEDULE

Soil Pressure — Spot Footing= Cont Footing=

Mark	Width	Length	Thick	Crosswise Reinforcement No	Size	Length	Space	Lengthwise Reinforcement No	Size	Length	Space	Notes
F-1	2'-0"	CONT	12"					2	#5	CONT		
F-2	3'-6"	CONT	12"	1	#5	3'-0"	12"	3	#5	CONT		
F-3												
F-4	2'-0"	CONT			#5		12"	4	#5	CONT		SEE SECTION 2/S-5
F-5												
F-6	9'-6"	9'-6"	22	9	#7	9'-0"	13.5"	9	#7	9'-0"	13.5"	
F-7	10'-6"	10'-6"	25"	10	#7	10'-0"	13.3"	10	#7	10'-0"	13.3"	
F-8	1'-0"	9'-6"			#5		12"	5	#5	CONT		SEE SECTION 4/S-5
F-9	SEE PLAN ON S-4		15"		#5	20'-6"	12"		#5	20'-6"	12"	EACH WAY TOP AND BOTTOM
EF-1	2'-0"	CONT	12"									
EF-2	3'-0"	CONT	12"									
EF-3	5'-0"	5'-0"	12"									
EF-4	5'-6"	5'-6"	12"									
EF-5	6'-0"	6'-0"	12"									

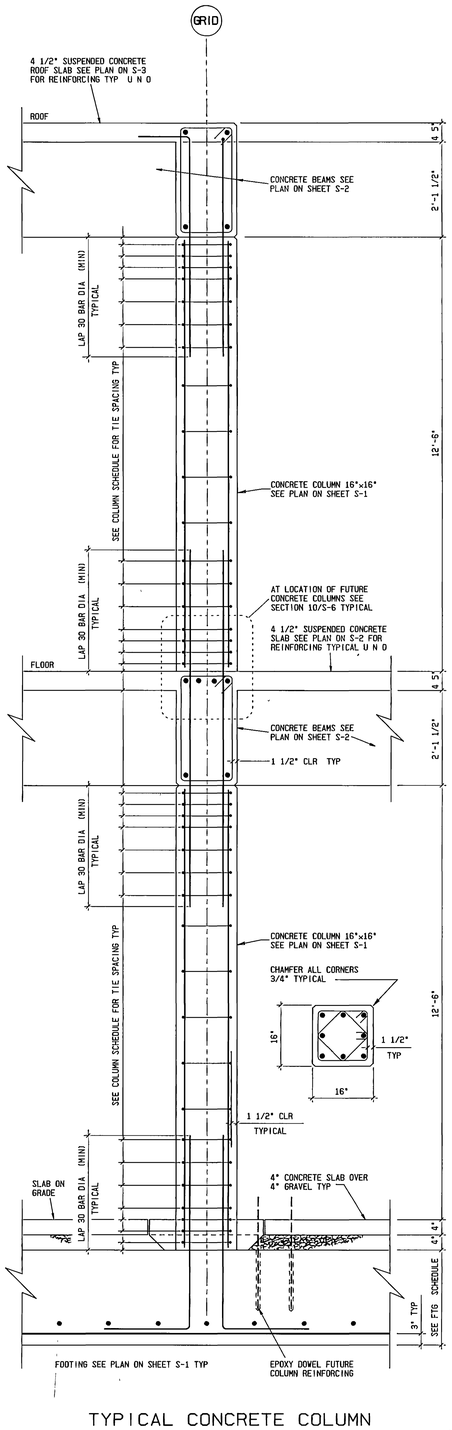

TYPICAL CONCRETE COLUMN

SECTION 1 / S-7
SCALE 3/4" = 1'-0"

AS BUILTS

REGISTERED PROFESSIONAL ENGINEER No 4046 REINHARDT BSUMEK STATE of UTAH

0000AQS7
Utah Valley Community College, Learning Resource Center - RV 90-014
Schedules - 7240

UTAH VALLEY COMMUNITY COLLEGE LEARNING CENTER/LIBRARY ADDITION

SCHEDULES

STRUCTURAL ENGINEER	Bsumek Mu and Associates
MECHANICAL ENGINEER	VanBoerum and Frank
ELECTRICAL ENGINEER	Becherer Nielson and Associates
LANDSCAPE ARCHITECT	:MGB and Associates
INTERIOR DESIGNER	:Don Harward

DRAWN BY Dale
CHECKED BY Kevin

Scott, Louie and Browning
architects, engineers, planners
4760 Holladay Boulevard Salt Lake City Utah 84117

Utah Valley Community College
Learning Resource Center/Library Addition
Orem, Utah DFCM Project No. RV-90-014

S-7
Feb. 18, 1991

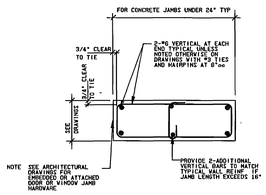

TYPICAL CONCRETE JAMB

SECTION 1 / S-8
NOT TO SCALE

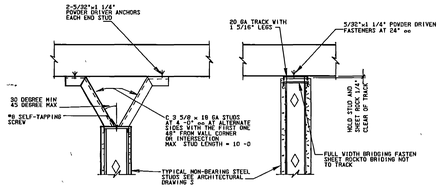

TYPICAL NON-BEARING STUD SUPPORT

SECTION 4 / S-8
NOT TO SCALE

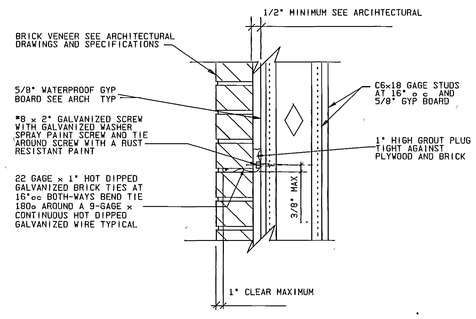

SECTION 7 / S-8
NOT TO SCALE

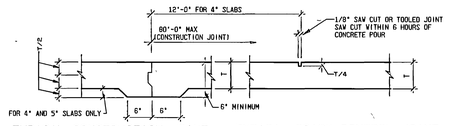

TYPICAL CONSTRUCTION JOINT TYPICAL CRACK CONTROL JOINT
CONCRETE SLAB-ON GRADE

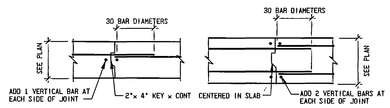

TYPICAL CONCRETE WALL CONSTRUCTION JOINT

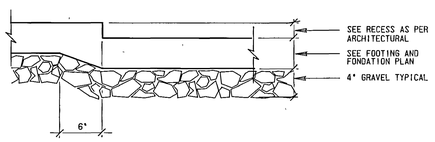

TYPICAL SLAB RECESS DETAIL

SECTION 2 / S-8
NOT TO SCALE

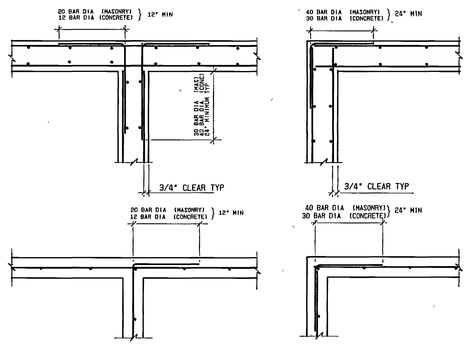

TYPICAL WALL INTERSECTION TYPICAL WALL CORNER

SECTION 5 / S-8
NOT TO SCALE

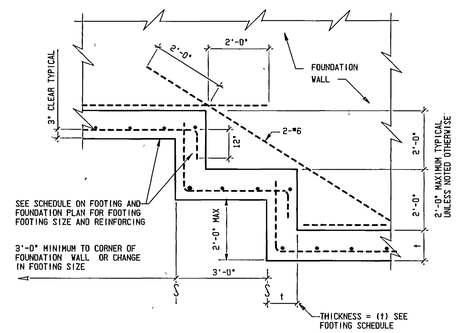

TYPICAL STEP FOOTING

SECTION 8 / S-8
NOT TO SCALE

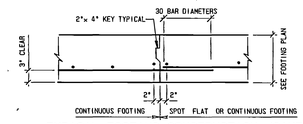

TYPICAL FOOTING CONSTRUCTION JOINT

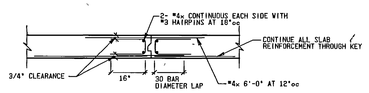

TYPICAL SUSPENDED SLAB CONSTRUCTION JOINT

SECTION 10 / S-8
NOT TO SCALE

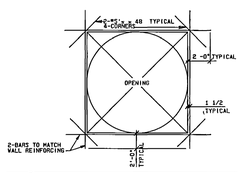

REINFORCING SCHEDULE	
SLAB	
OPENING SIZE	REINFORCEMENT
12" TO 18	1-#4 ALL AROUND TOP AND BOTTOM
19" TO 29	2-#4 ALL AROUND TOP AND BOTTOM
30" TO 48"	2-#5 ALL AROUND TOP AND BOTTOM
48 TO UP	SEE DRAWINGS
WALL	(BARS ABOVE OPENING ONLY)
OPENING SIZE	REINFORCEMENT
UP TO 7 -0"	2- #6 x
7 -0" TO 10'-0"	2- #7 x
10'-0 TO 12 -0"	2- #8 x
NOTE	
WHENEVER TOP OR BOTTOM REBAR (SHOWN ON PLAN) ARE INTERRUPTED BY A SLAB OPENING PLACE BARS OF SAME SIZE AND LENGTH EACH SIDE OF OPENING	

TYPICAL REINFORCING AROUND OPENING
IN CONCRETE WALL OR SLAB

SECTION 3 / S-8
NOT TO SCALE

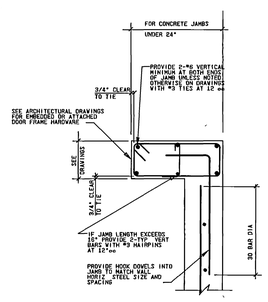

TYPICAL CORNER JAMB DETAILS

SECTION 6 / S-8
NOT TO SCALE

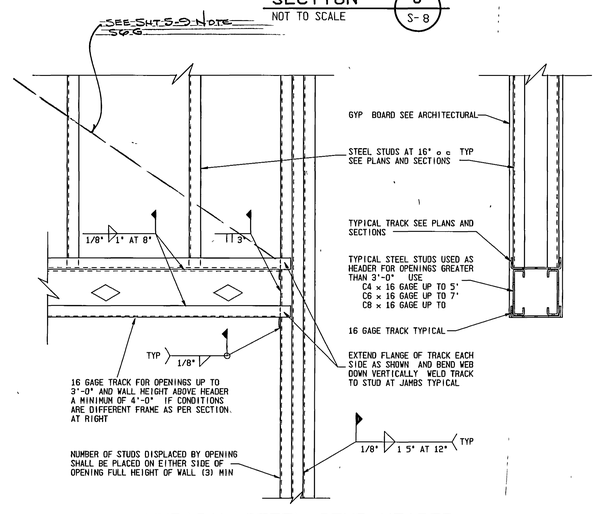

TYPICAL STEEL STUD HEADER

SECTION 9 / S-8
NOT TO SCALE

0000AQS8
Utah Valley Community College Learning Resource Center - RV 90-014
Typical Details - 7241

AS BUILTS

REGISTERED PROFESSIONAL ENGINEER No 4046 REINHARDT BSUMEK STATE of UTAH

UTAH VALLEY COMMUNITY COLLEGE LEARNING CENTER/LIBRARY ADDITION

TYPICAL DETAILS

STRUCTURAL ENGINEER	Bsumek Mu and Associates
MECHANICAL ENGINEER	van Boerum and Frank
ELECTRICAL ENGINEER	Bacherer Nielson and Associates
LANDSCAPE ARCHITECT	MGB Associates
INTERIOR DESIGNER	Don Harward

DRAWN BY: DALE
CHECKED BY:

Scott, Louie and Browning
architects, engineers, planners
4700 Holladay Boulevard Salt Lake City Utah 84117

Utah Valley Community College
Learning Resource Center/Library Addition
Orem, Utah DFCM Project No. RV-90-014

S-8
Feb. 18, 1991

I. Basis of Design

B1 Governing Building Code 1988 Uniform Building Code (UBC)

B2. Gravity Loading
A Roof 20 psf dead load
35 psf snow load plus snowdrift
B Floor 125 psf live load

B3. Earthquake
A Seismic zone 3 Z= 3
B Importance Factor 1 0
C Rw = 6

B4 Wind velocity. 70 miles per hour exposure C

B5 Foundation
A Subsurface Conditions
Soils report and log of boring was obtained by the owner for the Engineer's use in the design of the foundation. and is not a part of the Contract documents This report and log of boring is available for the Contractor's information. but is not warranty of the subsurface conditions The contractor may use the report at his own risk
B Soils Report by C T C-GEO TEK July. 1990 dated
C Soil Bearing Pressure 3000 psf on 3 feet of compacted fill See 1/S-9

II. Site Work

SW1 A minimum of 4" of topsoil shall be removed from the entire building site including all vegetation and debris

SW2 The soils engineer shall inspect the site to verify 3000 psf soil pressure used prior to placing any footing forms Report to architect any findings which may affect foundation and footing stability

SW3 All bearing earth to be undisturbed earth or compacted fill The area on which the fill is placed must be frost free The fill shall then be placed in layers not to exceed 8 inches in depth and compacted

SW4 All fill and back fill shall be compacted to a minimum of 95/ of maximum relative density for footings and 90/ for all other structural fill

SW5 Any fill to be placed under the building and footings shall be a well graded granular material within the limits of the following gradation

Sieve Size	Percent Passing
4"	100
1"	60-90
*4	30-60
*40	10-30
*200	20

SW6 All water shall be removed from foundation excavation prior to placing of concrete See also soil report Do not pour concrete under water

SW7 Any unusual soil conditions (water. clay soft layers. etc) encountered during excavation for footings shall be immediately brought to the attention of the architect and soils engineer

III. Concrete and Reinforcing

C1 All work and materials shall comply with all areas of ACI 318 and 347 Publications and applicable ASTM Publications

C2 Compressive strength of concrete at 28 days shall be as follows (only 1-grade of concrete shall be poured on the job at one time)
A All other concrete poured on site 4000 psi
B Concrete beams and columns

C3 Hardrock aggregates shall conform to ASTM C-33 Their Maximum size shall be 3/4" except 1-1/2" may be used for footings The 3/8" maximum for concrete columns

C4 Admixtures
A Concrete mix shall include flyash as per ASTM C618 class "F" or "C" except that maximum loss on ignition shall be limited to 3/ to yield specified quantities Flyash replacement of cement shall be limited to 15/ by weight
B Air entraining agent must conform ASTM C620 use 7/ plus or minus 1 1/2 / for exterior concrete and use 3/ plus or minus 1/ for other concrete Use type II concrete in contract with ground

C5 The contractor shall submit mix design and 3. 7. and 28 days strength tests for approval by the structural engineer before any concrete is poured at the job site
Mix that produces lowest slump compatible with proper placement shall be used (4" maximum slump unless otherwise approved by structural engineer) Use 3" maximum slump for all slabs on grade

C6 Unless otherwise noted all reinforcement bars shall be securely anchored to the forms and spaced from them as follows

		Minimum Coverage
A	Cast against 8 exposed to earth	3 inches
B	Concrete exposed to earth or weather	
	*6 though *18 bars	2 inches
	*5 bar and smaller	1 1/2 inches
C	Not exposed to weather or in contact with ground slabs. walls. and joists	3/4 inches

C7 Reinforcing Steel
A All reinforcing steel shall be bent detailed and chaired as per the "ACI Manual of Standard Practice for Detailing Reinforcing Concrete Structures "
B All reinforcing steel shall be of new stock deformed bars conforming to ASTM A-615 grade 60 unless otherwise noted Placement of bars in accordance with ACI 315 and ACI 318 Use bar supports per ACI 315 chapter 7 for all rebar and welded wire fabric
C Minimum Reinforcing bar laps 30 diameters unless noted otherwise on drawings
*3=18" *4=18" *5=19" *6=23" *7=27"
*8=30" *9=34" *10=38" *11=42"
D Reinforcing for concrete walls as follows (unless otherwise noted on drawings)

Thickness	Horizontal Reinf	Vertical Reinf
6"	*4 at 16" o c	*4 at 18" o c
8"	*4 at 12" o c	*4 at 18" o c
10"	*4 at 10" o c each face	*4 at 18" o c each face
12"	*4 at 10" o c each face	*4 at 16" o c each face

E All dowels shall have at least 30 bar diameter embedment
F Provide corner bars at all intersecting corners Use same size bar and spacing as horizontal wall reinforcing
G Add 2-*5 bars around all openings (unless otherwise noted) and extend 24" beyond corner of openings Add also 2-*5 x 4'-0" diagonally at corners For reinforcing over opening see typical opening details on drawings
H When called for on the drawings or when directed by engineer bars that are to be epoxy doweled are to be put in holes larger than the bar diameter (1/4" larger for rebar and 1/8" larger for threaded bars) The holes shall be ten bar diameters deep for 4000 psi concrete or above and 15 bar diameters for concrete below 400 psi and masonry Fill holes with "Sika-Dur" Hi-Mod epoxy gel (or equal as approved by engineer)
All epoxy dowels and epoxy anchors are to be either threaded or deformed bars as per drawings Apply epoxy as per manufacture's recommendations Mixing shall be done using a power mixer For cold weather application gel shall be mixed at 70 degrees and kept at 40 degrees for 72 hours after application
I The contractor shall include an "In-Place" price in his bid for 2000' pounds of reinforcing bars to be used as directed by the structural engineer This reinforcing steel need not be stockpiled at the job site The contractor shall submit with his bid an unit price credit for the unused portion of bars
K All rebar welding shall comply with AWS specifications

C8 Concrete tests shall be made by testing laboratory approved by the architect. with copies of all reports being mailed to the architect and the contractor Tests will be made on major pours and at such other times as may be required by the architect Each test shall consist of 3 cylinders of which one shall be tested at 7 days. 1 (one) tested at 28 days. and one retained in reserve for later tests. if required In general. one test shall be made for each 50 cubic yards of concrete Specimens shall be made and tested in accordance with ASTM D-31 and C-39 standards Slump and Air entrainment test shall also be made with each set of cylinders taken Contractor shall provide the cylinders The testing laboratory shall transport all cylinders The contractor shall pay for all tests

C9 Before concrete is poured check with all trades to insure proper placement of all openings. sleeves curbs. conduits. bolts inserts. etc relating to work .

C10 Drypack concrete shall be one part Portland cement and one part sand with sufficient water to allow a small amount of paste to come to the surface Use for grouting joists and beam pockets unless otherwise noted

C11 Under steel column base plates. concrete grout shall be non-shrink with sufficient water to allow pouring. Ultimate compressive strength (F'C) at 28 days shall = 4.000 psi. Grout shall be non-metallic. meeting CRD-C621 and in accordance with the manufacturer's published specification for mixing and placing

C12 Formwork not supporting weight of concrete. such as sides of beams. walls. columns and similar parts of the work. may be removed after cumulatively curing at not less than 50 degrees for 24 hours after placing concrete. provided concrete is sufficiently hard to not be damaged by form removal operations. and provided curing and protection operations are maintained
Formwork supporting weight of concrete such as beam soffits. joints. slabs and other structural elements. may not be removed in less than 14 days or until concrete has attained 75/ of its design minimum compressive strength at 28 days
Support from facing materials with structural members spaced sufficiently close to prevent deflection Fit forms placed in successive units for continuous surfaces to be accurately aligned free form irregularities and within allowable tolerances
Provide 1/16" camber per every 2 5 feet in concrete form work unless otherwise indicated by Architect/Engineer

C13 Provide a continuous 2" x 4" key in all wall footings Unless noted otherwise on drawings

C14 All exposed to view concrete shall be stoned smooth while green. or as directed by Architect No grout plaster shall be permitted Exposed to view concrete shall have 3/4" deep "V" groove placed vertically at 8'-0" o c or as directed by Architect

C15 Protect freshly placed concrete from premature drying and excessive cold or hot temperature as per ACI 318 and maintain without drying at a relatively constant temperature for a period of time necessary for hydration of cement and proper hardening

C16 Cold weather curing and protection requirements for concrete shall conform to the requirements of UBC Section 2605 (E) and (F) When depositing concrete at freezing temperature or below. the concrete mix shall have a temperature of at least 50 degrees but not more than 80 degrees
The concrete shall be maintained at a temperature of not less than 50 degrees and in a moist condition for not less than 7 days after placing or as directed by the structural engineer
The use of chemicals or additives to prevent freezing will not be permitted.
Refer also to specifications and to directive by structural engineer for additional cold weather requirements

C17 Architect/Engineer shall be notified 48 hours prior to pouring any concrete in order to observe reinforcing placement

C18 All concrete shall be properly vibrated in place using internal vibrating rods

C19 Non-Shored suspended concrete slabs (on metal deck) shall be screeded off of non-deflecting elements or adjustments in screeds should be made for concrete weight deflections Submit dead load deflection design for approval

IV. Masonry

M1 A All masonry shall be "Concrete Block" conforming to ASTM C-90 N-1 with minimum net F'm of each unit = 3000 psi established by compression tests. prism tests shall be made to established an assembled F'm= 2500 psi Submit test reports showing conformance with C-90 N-1 and strength.
B All face brick shall be burned clay grade SW conforming to UBC Standard *24-1.

M2 All mortar shall be Type "S" using Portland Cement and hydrated lime only compressive strength of mortar shall be 1800 psi minimum at 28 days Use 1 part Portland cement to 1/2 part hydrated lime to not less than 2 1/4 and not more than 3 times the sum of the volumes of the cement and lime used

M3 Grout
A Grout shall have an 8" to 10" slump using 3/8" max aggregate Size and height limitations of the grout space or cell on the average shall not be less than shown in table no 24-G Higher grout pours or smaller cavity widths or cell size than shown in tabel *24-G may be used when approved. if it is demonstrated that grout spaces are properly filled
B When required by table no 24-G clean outs shall be provided in the bottom course at every vertical bar but shall not be spaced more than 32" on center for solidly grouted masonry Units may be laid to the full height of the grout pour and grout shall be placed in a continuous pour in grout lifts not exceeding 6 feet
C Grout shall be consolidated before loss of plasticity in a manner to fill the grout space Grout shall be vibrated with an internal pencil vibrator at each lift
D Minimum compressive grout strength = 3000 PSI
E Fine grout shall be composed of one part portland cement. to which may be added not more than one-tenth part hydrated lime or lime putty. and two and one-fourth to three parts sand
F Coarse grout shall be composed of one part portland cement. not more than 1/10 part hydrated lime or lime putty. 2 to 3 parts sand. not more than 2 parts 3/8" max aggregate All grout to be properly vibrated during placement and again before final set using an internal pencil type vibrating rod

M4 Construction
A Unless otherwise noted on drawings all masonry walls shall be placed in lengths to permit maximum 4'-0 lifts as per uniform building code (88) Table 24-G
B All anchor bolts (and expansion anchors) shall be placed in grouted cells
C Provide 1/16" camber per every 2 5 feet in masonry formwork unless otherwise indicated or directed by architect/engineer The head sections of all masonry openings shall be shored to prevent sagging Contractor shall provide shoring calculation for beam spans over 10'-0"
D Masonry construction in cold weather shall be in compliance with UBC sec 2404 (c)

M5 Reinforcing
A Unless noted otherwise on drawings reinforce masonry walls as follows

Thickness	Horizontal Rein	Vertical Rein.
6"	*5 @ 48" o c	*4 @ 24" o c
8"	2-*4 @ 48" o c	*7 @ 48" o c
10"	2-*4 @ 48" o c	*6 @ 32" o c.
12"	2-*4 @ 48" o c	2-*4 @ 24" o c

B In addition to wall reinforcing all openings jambs. wall corners and wall ends shall have 2-vertical bars continuous from footing to top of wall
C Reinforcing shown is for running bond If stack bond is used Provide 9 gage hot dipped galvanized joint reinforced at 16" o c lapped 12" and provide 015 bt minimum area horizontal steel Unless noted otherwise
D All reinforcing steel shall be new stock deformed bars conforming to ASTM A-615 grade 60
E Lap all masonry reinforcing 40 bar diameters
F All vertical reinforcing shall have dowels the same size and spacing as vertical bars into foundation wall or footing below
G Horizontal reinforcement shall be continuous at all intersecting walls and corners
H All horizontal reinforcing and ties shall be in H-blocks and grouted solid
I All reinforced cells shall be grouted solid
J A minimum of 1/2" clearance shall be maintained between reinforcing steel or bolts and the surface of masonry units

V. Structural Steel

S1 All structural steel work shall comply with the latest edition of the AISC "Standard Specifications For The Design. Fabrication and Erection of Structural Steel for Buildings". and "Code of Standard Practice" ASTM A-36 specified and ASTM A-500 grade B for structural tubes

S2 Shop paint and remove all rust. oils. mill scale Apply one coat zinc chromate 2 dry mills thick Provide touch up field coat at all abraded and welded areas. two dry mills thick All steel exposed to moisture conditions shall be galvanized

S3 Unless noted otherwise. all structural steel to steel bolted connections shall use 3/4" diameter high strength bolts conforming to ASTM A-325 (N) and shall have carbonized washers under the turning unit All other bolts shall conform to ASTM A-307 A-325 bolts are to tightened by load indicator washers All A-325 bolt tightening shall be supervised by an independent testing agency who shall certify in writing that all bolts are properly tightened

S4 Welding
A All welding to be made by certified welders using E-70 series electrodes
B All welders to be currently certified for all type of welds on this project under latest AWS standard. "Qualification test for welders " Welders to have passed the Qualification test within proceeding 12 month period
C Welds made against concrete are to be done under the supervision of an approved testing agency and that fillet welds should be made in 1/8" passes 2" long at 4" o c
D All steel to steel connections not shown bolted shall be welded to develop full shear capacity of connection members Minimum size of fillet weld (unless noted otherwise on drawings)

Material thickness of thicker part joined	Minimum size of of fillet weld
to 1/4" inclusive	1/8"
over 1/4" to 1/2"	3/16"
over 1/2" to 3/4"	1/4"
over 3/4"	5/16"

E Unless otherwise noted all structural steel to steel connections shall be made in such a manner to develop full shear capacity of connecting members as per AISC specifications
F Field paint all abraded and welded surfaces for joists and metal deck
G Unless Otherwise indicated. all anchors welded to steel plates or angles that are embedded in masonry or concrete shall be deformed bar anchors (DBA) Nelson or KSM. type stud welded to plate or angle
H All deck bearing angles or plates shall have full strength welds at splices and corners typical unless noted otherwise
I All full penetration welds shall be tested by x-ray or ultrasonic procedures. all other welding shall be done under the direct supervision of an independent testing laboratory approved the architect
J 10/ of all field welds shall be tested by ultrasonic procedures
K All copies of test results are to be sent to structural engineer Welds found to defective shall be corrected at no extra cost to the owner
L All welding shall comply with AWS D1 1-88 specifications

S5 Steel Deck
A All metal deck shall meet requirements of steel deck institute (SDI) for wide rib deck See drawings for type of deck Manufacture shall be a member of SDI
B Deck manufacturer shall have ICBO certification showing lateral shear capacities of deck equalling 500 plf Provide 18 gage sheet metal reinforcing at all openings through metal deck For openings 15" and larger frame opening with angle 3 x 3 x 1/4" unless otherwise noted End laps to occur at supports and shall have minimum lap of 2" The deck shall be attached to all supports and the side lap of adjacent units
C All deck splices shall occur over supporting members and shall have a minimum of 2" of flat bearing surface contact
D Deck Welding
a Supports parrellel to deck 3/4" diameter each valley
b Supports perpendicular to deck 3/4" dimeter at 12"o c
c Top seam welds 1 1/2" at 12" o c
Deck shall be crimped prior to all side or top seam welding
Welder shall be certified as a light gage welder in accordance with ASW
E Unless noted otherwise on drawings all deck shall bear on and be welded to continuous angle 3 x 3 x 1/4 x continuous at all deck boundaries fastened to concrete or masonry wall with weld plates as per typical details or 3/4" diameter x 8" x 3" J-bolts at 24" o c Provide angle 2 1/2 x 2 1/2 x 3/16 under all changes in deck direction
F All continuous deck bearing angles shall have full strength welds at splices and corners.
G Architect/Engineer shall be notified 48 hours prior to application of roofing material in order to observe deck attachment

S6 Steel Studs
A Structural steel studs shall be as specified in this note and shown on drawings with minimum properties

Stud Size	Gage	Area (in 2)	IXX (in 4)
C4	18	277	85
C6	18	368	2 22

B All studs shall be spaced at 16" o c unless noted otherwise and to be standard painted unless otherwise noted
Fy for 16 ga and heavier material 50 Ksi
Fy for 18 ga and lighter material 33 Ksi
C Unless otherwise noted all bridging to be 1 1/2" minimum x 18 ga. x continuous cold rolled channels positioned through stud punch-outs and weld attached on both sides to stud punch-out. Bridging shall be spaced at 4'-6" o c to match punch-outs Where punch-outs do not line up use weld attached bridge clip angles
D All track to be stud size plus 3/16" by 1 and 5/16" by 16 gage standard painted Attach track to concrete slab at 16" o c using 177" diameter x 1 1/2" powder driven fasteners Field weld all studs to tack at each flange of stud Tracks and bridging to have Fy = 33.000 psi
E All splices of structural studs to be full strength Use 2'-0" minimum section lapped 1'-0" above and below splice fully welded Alternate all splices 24" minimum Spot paint all welds after cleaning
F Load bearing stud walls must be fabricated with the stud ends seated against the track web Full web and flange bearing must be provided
G All steel stud walls will be cross braced with 3" x 14 gage Hot dip galvanized steel plate screwed to steel studs with No 8 self tapping galvanized screws and 3- No 8 screws to tack top and bottom

S7 Headed stud type shear connectors shall conform to ASTM A-108 grade 1015 or 1020 cold finished carbon steel with dimensions complying with AISC specfications and as shown on drawings All beams shall have shear connectors spaced at 24" o c maximum unless otherwise noted Field test 10/ of all studs or as directed by structural engineer to minimum of 30 degrees If studs fail then reweld as directed by structural engineer

VII. General Conditions

G1 Specifications and general notes are intended to complement each other. any discrepancies should be brought to the attention of the Architect

G2 The typical details shall be used wherever applicable unless otherwise noted on the drawings Notes and details on drawings shall take precedence over general notes and typical details

G3 The contractor shall verify all dimensions and conditions at site

G4 All omissions or conflict between the various elements of the working drawings and or specifications shall be brought to the attention of the Architect and or Structural Engineer before proceeding with any work involved In case of conflict. follow most stringent requirement as determined by Architect and without cost to owner

G5 Shoring
A. Until all permanent members. including walls. slabs. floors and roof are in place and all connections are completed. stability of structure and all parts thereof shall be contractor's responsibility During construction contractor shall keep construction loads within the design floor and roof load limits shown on drawings After construction is completed building manager shall keep loads on roof and floor within design limits shown on drawings
B Do not backfill walls until floor at top of wall is in place or adequate temporary bracing is provided

G6 All Construction shall be in accordance with the 1988 Uniform Building Code and supplements unless higher standard is called for

G7 Contractor shall be responsible for safety and protection in and around job site and or adjacent properties

G8 Observation visits to the site by Bsumek Mu and Associates Field Representative shall neither be construed as inspection nor approval of construction

G9 Contractor shall provide 5 sets of shop drawings for approval by structural engineer for all reinforcing bars. structural steel. steel joists. steel deck. structural steel studs post tension cables glu-lam beams. wood joists. wood trusses and all prefab structural items

VIII. Special Inspections

Special inspections shall be done by Special Inspectors that are qualified and approved for each area of work stated below or as required by the Building Official All special inspections shall be paid for by the owner The special inspector shall observe the work assigned for conformance with the approved design drawings and specifications The special inspector shall submit reports to the owner. the Building Official. the Contractor. The Architect. and Bsumek Mu and Associates The special inspector shall conform to and fulfill all other responsibilities as outlined in section 306 of the Uniform Building Code The special inspector shall submit written reports of observations stating time. date. location of work and observation of work being done

Special inspections are required for the following work
1 Concrete and reinforcing placement. Except for the following conditions
A For foundations satisfying requirement of Uniform Building Table 29 A (P 603)
B Non-Structural slab on grade
C Site work concrete where no special hazards exists
2 Bolts installed in concrete where indicated on drawings

3 Welding except for the following
A Welded connections made by an approved fabricator's shop need no special inspection When Building Official allows perodic inspections for floor and roof deck welds and composite welded stud
B Periodic inspection may be done as outlined on drawings See 306 UBC-88 A 5 B page 15.
4 High strength bolting inspection for bearing type connections need be done only after installation

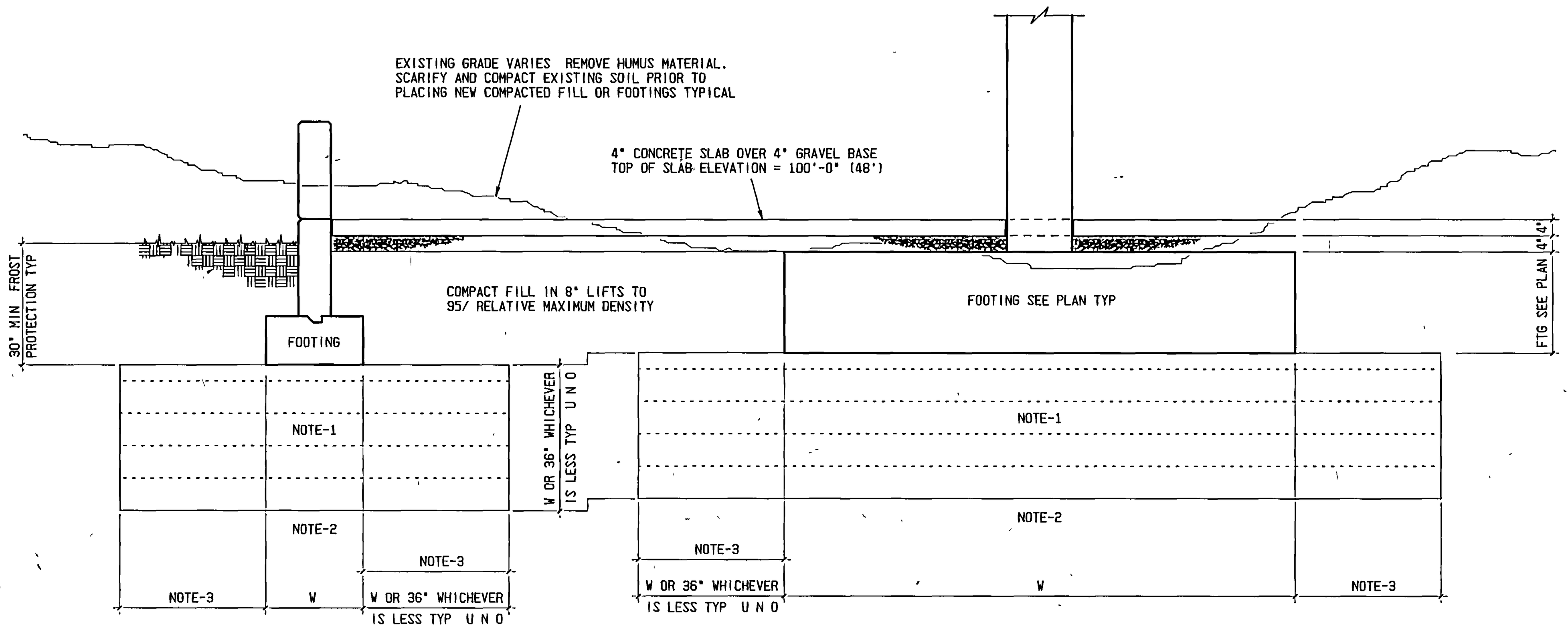

NOTE-1 COMPACTED FILL PLACED IN 8" LAYERS SEE SHEET S-9 NOTE SW5 FOR GRADATION OR AS APPROVED BY SOILS ENGINEER COMPACT FILL AS PER SHEET S-9 NOTE SW4

NOTE-2 SOILS ENGINEER SHALL APPROVE BEARING CONDITIONS PRIOR TO PLACING FILL TYP

NOTE-3. ALL FOUNDATION EXCAVATIONS SHOULD BE PROTECTED AGAINST DETRIMENTAL CHANGE IN CONDITIONS SUCH AS DISTURBANCES. RAIN. AND FREEZING SEE CTC-GEOTEK JOB *042065 JULY.1990

TYPICAL SUBGRADE SOIL PREPARATION

SECTION 1 S-9
SCALE NTS = 1'-0"

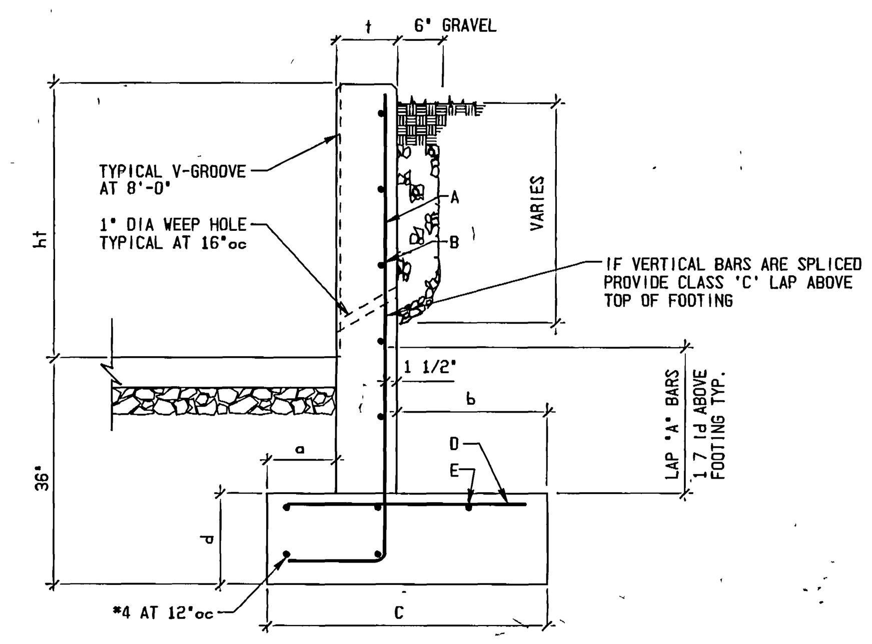

RETAINING WALL SCHEDULE

ht	3'-0"	6'-0"	8'-0"	10'-0"	12'-0"
t	8"	8"	10"	12"	12"
d	12"	12"	12"	12"	12"
c	2'-0"	3'-8"	4'-10"	6'-0"	7'-6"
a	6"	1'-0"	1'-0"	1'-0"	1'-6"
b	10"	2'-0"	3'-0"	4'-0"	5'-0"
A	*4 @ 12"	*4 @ 12"	*4 @ 12"	*5 @ 12"	*6 @ 11"
B	*4 @ 12"	*4 @ 12"	*4 @ 10"	*4 @ 8"	*4 @ 8"
D	*4 @ 12"	*4 @ 12"	*4 @ 12"	*5 @ 12"	*7 @ 12"
E	*4 @ 12"	*4 @ 12"	*4 @ 12"	*4 @ 12"	*4 @ 12

TYPICAL RETAINING WALL

SECTION 2 S-9
SCALE NTS = 1'-0"

0000AQS9
Utah Valley Community College, Learning Resource Center - RV 90-014
General Notes Structural - 7242

AS BUILTS

REGISTERED PROFESSIONAL ENGINEER No 4046 REINHARDT BSUMEK STATE of UTAH

UTAH VALLEY COMMUNITY COLLEGE LEARNING CENTER/LIBRARY ADDITION

STRUCTURAL ENGINEER :Bsumek Mu and Associates
MECHANICAL ENGINEER :van Boerum and Frank
ELECTRICAL ENGINEER :Becherer Nielson and Associates
LANDSCAPE ARCHITECT :MGB. : and Associate
INTERIOR DESIGNER :Don Harward

DRAWN BY DALE
CHECKED BY

GENERAL NOTES: STRUCTURAL/TYPICAL DETAILS

Scott,Louie and Browning
architects, engineers, planners
4766 Holladay Boulevard Salt Lake City, Utah 84117

Utah Valley Community College
Learning Resource Center/Library Addition
Orem, Utah DFCM Project No. RV:90-014-

S-9
Feb. 18, 1991

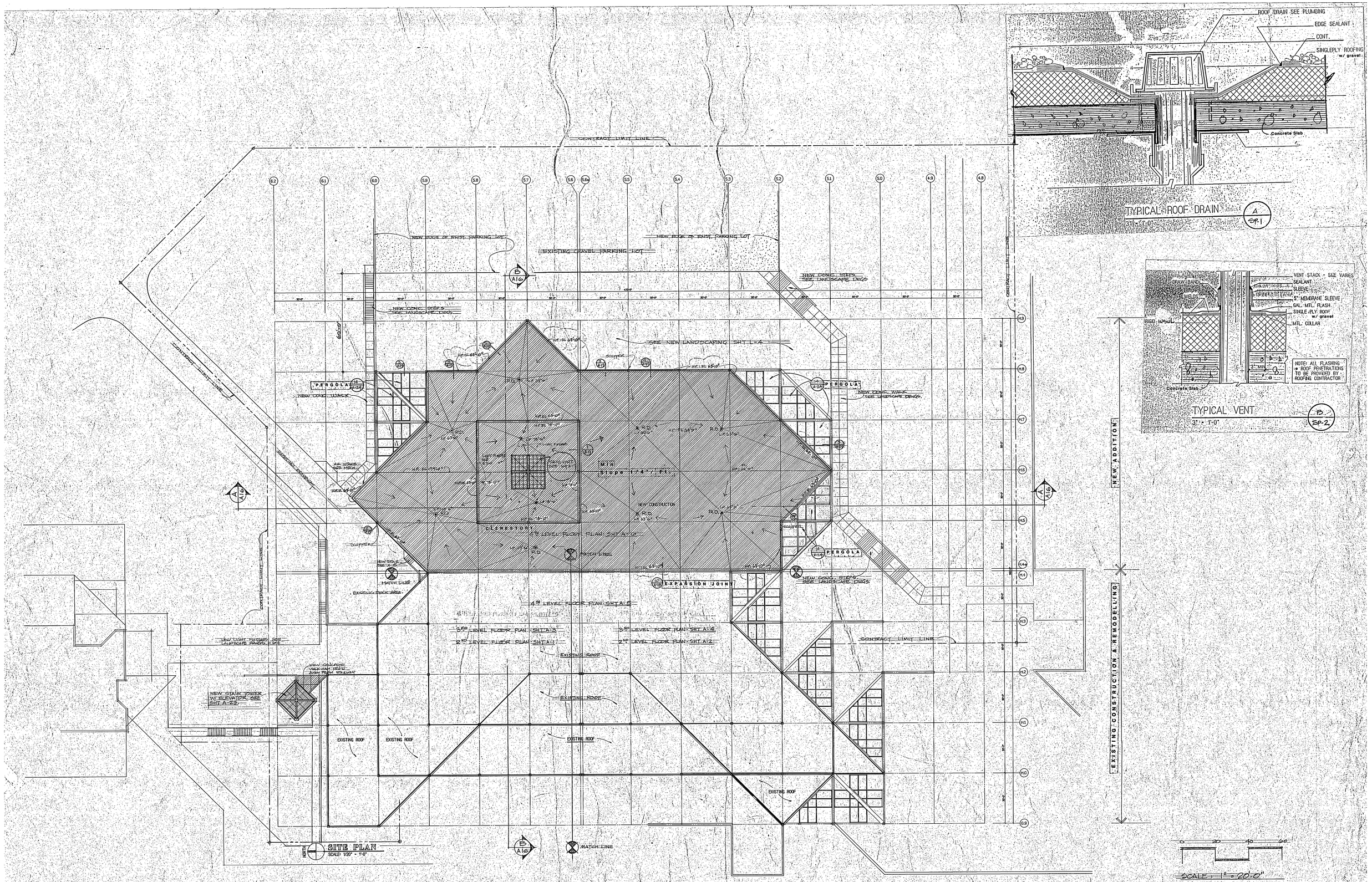

0000AQSP1a
Utah Valley Community College; Learning Resource Center - RV:90-014
Site Plan Roof Plan - 7207

AS BUILTS

UTAH VALLEY COMMUNITY COLLEGE LEARNING RESOURCE CENTER/LIBRARY ADDITION

SITE PLAN/ROOF PLAN

STRUCTURAL ENGINEER	: Bsumek Mu and Associates
MECHANICAL ENGINEER	: VanBoerum and Frank
ELECTRICAL ENGINEER	: Becherer Nielson and Associates
LANDSCAPE ARCHITECT	: MGB and Associates
INTERIOR DESIGNER	: Don Harward

DRAWN BY: WMD - KRP
CHECKED BY: KRP

STATE OF UTAH
SCOTT, LOUIE & BROWNING
P.E. 1165
ARCH. 235
ARCH. 833
Salt Lake City
LICENSED ARCHITECTS & ENGINEERS

Scott, Louie and Browning
architects, engineers, planners
4766 Holladay Boulevard, Salt Lake City, Utah 84117

Utah Valley Community College
Learning Resource Center/Library Addition
Orem, Utah DFCM Project No. RV:90-014

SP - 1
Feb. 18, 1991

LEGEND OF MECHANICAL AND PLUMBING SYMBOLS AND ABBREVIATIONS

SINGLE LINE	DOUBLE LINE	
		POSITIVE PRESSURE DUCT – RISE OR DROP
		POSITIVE PRESSURE DUCT – DROP
		NEGATIVE PRESSURE DUCT – RISE
		NEGATIVE PRESSURE DUCT – DROP
		ROUND DUCT – RISE
		ROUND DUCT – DROP
		UNDER FLOOR DUCT
		MEDIUM OR HIGH PRESSURE FLEX CONNECTION TO TERMINL UNIT
		SPLITTER DAMPER WITH TURNING VANES
		TURNING VANES
		RETURN AIR GRILLE WITH SOUND BOOT
		FRESH AIR LOUVER
		RELIEF AIR OR EXHAUST AIR LOUVER
	200 / 12x6x3	CEILING SUPPLY DIFFUSER
	200 / 20x10	CEILING RETURN REGISTER
	200 / 20x10	CEILING EXHAUST REGISTER
	200 / 24x10	SIDEWALL SUPPLY REGISTER
	200 / 24x10	SIDEWALL EXHAUST OR RETURN REGISTER
	250 / 12"ø x 4	CEILING SUPPLY DIFFUSER WITH FLEXIBLE DUCT
	RETURN 24x24	CEILING PLENUM RETURN REGISTER
	500 / 3 SLOTS x 31/2" SLOT	LINEAR DIFFUSER WITH ACOUSTICALLY LINED PLENUM AND FLEXIBLE DUCT CONNECTION. CFM ON TOP, NO. OF SLOTS, ACTIVE LENGTH, AND SLOT WIDTH AT BOTTOM.
		FLEXIBLE DUCT CONNECTION
		FLEXIBLE DUCT
		FAN
		PLENUM WITHOUT INSULATION LINER
		PLENUM WITH INSULATION LINER
12x8	12x8	RECTANGULAR DUCT WITH NET INSIDE DIMENSIONS SHOWN IN INCHES
12"ø	12"ø	ROUND DUCT WITH NET INSIDE DIMENSIONS SHOWN IN INCHES.
UP	UP	INCLINED RISE
DN	DN	INCLINED DROP
	W R	R/W=1. ROUND DUCT SIMILAR TO RECTANGULAR
		RECTANGULAR TO RECTANGULAR OR ROUND TO ROUND DUCT TRANSFORMATION MAXIMUM 15° INCLUDED ANGLE EXCEPT WHERE SHOWN OTHEWISE.
9x9 9"ø	9x9 9"ø	RECTANGULAR TO ROUND DUCT TRANSFORMATION
	R	BRANCH DUCT SPLIT WITH 6" WIDTH AND MIN. R=WIDTH OF BRANCH DUCT DOWNSTREAM. ELBOW TURNING VANE OPTIONAL.
		TAP ENTRY AREA EQUALS 150% OF BRANCH AREA
		SINGLE BLADE OR MULTIBLADE VOLUME DAMPER
		MOTORIZED DAMPER IN DUCT
B.D.	B.D.	BACKDRAFT DAMPER
		COMBINATION FIRE/SMOKE DAMPERS
		FIRE DAMPER IN DUCT, ACCESS PANEL REQD.
OR	OR	ATC DAMPER
AP	AP	ACCESS PANEL
AD	AD	ACCESS PANEL IN DUCT OR PLENUM
		HEATING OR COOLING COIL IN DUCT
		SINGLE DUCT AIR TERMINAL WITH REHEAT COIL VARIABLE OR CONSTANT VOLUME. MIN. 1–1/2 TERMINAL INLET SIZE STRAIGHT DUCT AT TERMINAL INLET.
		SINGLE DUCT AIR TERMINAL VARIABLE OR CONTANT VOLUME MIN. 1–1/2 TERMINAL INLET SIZE STRAIGHT DUCT AT TERMINAL INLET.
		SUPPLY
		RETURN
		EXHAUST
		ROUND DUCT SECTION

TOP FIGURE INDICATES CFM. BOTTOM FIGURES INDICATE NECK SIZE AND DIRECTION AND NUMBER OF THROWS ON SUPLY DIFFUSER DUCT SIZE IS FULL SIZE OF DIFFUSER/REGISTER CONNECTION.

WITH RESPECT TO AIR FLOW 15° NOMINAL INCLINE WITH RADIUS TURNS=DEPTH OF DUCT.

RECTANGULAR DUCT SECTION

	90° ELBOW
	45° ELBOW
	SIDE OUT DOWN ELBOW
	SIDE UP OUT ELBOW
	DOUBLE ELBOW
	STRAIGHT TEE (PIPE BRANCH – IN PLANE)
	CROSS
	CONCENTRIC REDUCER
	ECCENTRIC REDUCER
	LATERAL STRAINER
	LATERAL STRAINER WITH BLOW–OFF VALVE
	GATE VALVE
	ATC VALVE – 2 WAY
C	ATC VALVE – 3 WAY
	GLOBE VALVE
	HOSE GATE VALVE
	HOSE GLOBE VALVE
	ANGLE GLOBE VALVE
	ANGLE GLOBE VALVE DOWN
	ANGLE GATE VALVE
	ANGLE GATE VALVE DOWN
	PRESSURE REDUCING, SELF CONTAINED VALVE
	PRESSURE REDUCING, EXTERNAL PRESSURE VALVE
	BALL VALVE (PIPE SIZE 2" AND SMALLER)
	BUTTERFLY VALVE (PIPE SIZE 2–1/2" AND LARGER)
	CHECK VALVE
	MOTOR OPERATED BUTTERFLY VALVE
	COCK VALVE
	SAFETY VALVE
	QUICK OPENING VALVE
	EXPANSION JOINT
	FLOAT VALVE
	MOTOR OPER GATE VALVE
	MOTOR OPER. GLOBE VALVE
	RELIEF VALVE
	DIAPHRAGM
PE	PNEUMATIC–ELECTRIC CONTROL VALVE
	SOLENIOD VALVE
	ALIGNMENT GUIDE
	ANCHOR
	PRESSURE GAUGE WITH COCK
PS	PRESSURE SWITCH
	FLANGE
	UNION
	FLOW METER ORIFICE
	AIR VENT–MANUAL
	AIR VENT–AUTO
	FLOW SWITCH
	SLEEVE
0 – 100°F	THERMOMETER 0–100°F
30 – 240°F	THERMOMETER 30–240°F
T	THERMOSTAT

TN	NIGHT THERMOSTAT
	STEAM TRAP, F&T=FLOAT & THERMOSTATIC B=BUCKET, T=THERMOSTATIC
SD	DUCT SMOKE DETECTOR
	SHUT–OFF COCK FOR USE WITH PRESSURE GAUGE
	PUMP
	REDUCER
	EXPANSION LOOP
	FLEXIBLE CONNECTION
	FLOW METER
	NATURAL GAS
	ARROW INDICATES DIRECTION OF FLOW IN PIPE LEADER INDICATES DOWNWARD SLOPE
	PIPE INTO PLANE
	PIPE OUT OF PLANE
	PIPE BRANCH – IN TO PLANE
	PIPE BRANCH – OUT OF PLANE
	PIPE BRANCH – IN PLANE
P	PUMP DISCHARGE
MU	MAKE UP WATER
(E)name	EXISTING PIPING
CHWS	CHILLED WATER SUPPLY
CHWR	CHILLED WATER RETURN
HWS	HEATING HOT WATER SUPPLY
HWR	HEATING HOT WATER RETURN
GPM	FLOW CONTROL VALVE
	CALIBRATED BALANCING VALVE
GHR	GLYCOL HEAT RECOVERY PIPING
G(NAME)	GLYCOL PIPING SOLUTION
LPG	PIQUIFIED PETROLEUM GAS
(NAME)	EXISTING PIPING TO BE REMOVED
RL	REFRIGERANT LIQUID
RS	REFRIGERANT SUCTION
HG	HOT GAS
	POINT OF CONNECTION
1430	ROOM NUMBER
D– / CFM	REGISTER, OR DIFFUSER SYMBOL WITH CFM LISTED
1 / M1–1	SECTION TAG – TOP FIGURE IS SECTION NO BOTTOM FIGURE IS SHEET NO
1 / M1–1	DETAIL TAG – TOP FIGURE IS DETAIL NO. BOTTOM FIGURE IS SHEET NO.
EF / 1	EQUIPMENT IDENTIFICATION
1	KEYED NOTE IDENTIFICATION
P–1	PLUMBING FIXTURES

S	SLOPE
	PIPING TO BE REMOVED
EF	EXISTING FIRE WATER
ECR	EXISTING CONDENSATE RETURN
EHPS	EXISTING HIGH PRESSURE STEAM
ELPS	EXISTING LOW PRESSURE STEAM
EE	EXISTING ELECTRICAL
HPC	HIGH PRESSURE CONDENSATE
PC	PUMPED CONDENSATE
D	DRAIN
CR	CONDENSATE RETURN
CS	CONDENSATE SUPPLY
HPS	HIGH PRESSURE STEAM (125 PSI)
LPS	LOW PRESSURE STEAM (15 PSI)
HPCW	DOMESTIC SOFT COLD WATER (HIGH PRESSURE)
HPHW	DOMESTIC HOT WATER (HIGH PRESSURE)
HPHWR	DOMESTIC HOT WATER RETURN (HIGH PRESSURE)
CW	DOMESTIC SOFT COLD WATER
HW	DOMESTIC HOT WATER
HWR	DOMESTIC HOT WATER RETURN
140°	DOMESTIC 140° HOT WATER
140°R	DOMESTIC 140° HOT WATER RETURN
DCW	DOMESTIC HARD COLD WATER
W	WASTE PIPING (ABOVE GRADE)
W	WASTE PIPING (BELOW GRADE)
G	NATURAL GAS PIPING
SD	STORM DRAIN PIPING
W	WATER MAIN PIPING
F	FIRE WATER PIPING
ESS	EXISTING SANITARY SEWER
S	SANITARY SEWER
ESD	EXISTING STORM DRAIN
EG	EXISTING GAS
EW	EXISTING WATER
V	VENT
PW	PUMPED WASTE
VTR	VENT THRU ROOF
RD	ROOF DRAIN
RDO	ROOF DRAIN OVERFLOW
FD	FLOOR DRAIN
FS	FLOOR SINK
RD,RDO	ROOF DRAIN, ROOF DRAIN OVERFLOW
P–13 HB	HOSE BIBB
	SHUTOFF VALVE
RPBP	REDUCED PRESSURE BACKFLOW PREVENTER
CB	CATCH BASIN
FDC	FREE STANDING FIRE DEPARTMENT CONNECTION
MH	MANHOLE
	THRUST BLOCK
M	METER
INV	INVERT ELEVATION
	PREACTION FIRE SPRINKLER RISER
	WET FIRE SPRINKLER RISER
	DRY FIRE SPRINKLER RISER
	ANGLE HOSE VALVE
OS&Y	OS&Y VALVE W/SUPERVISION
	SIGHT GLASS

1389AL01

0000AQM1
Utah Valley Community College, Learning Resource Center - RV:90-014
Mechanical and Plumbing Legend - 7244

AS BUILTS

REGISTERED PROFESSIONAL ENGINEER No. 3819 JAY MICHAEL BOREDUN State of Utah

UTAH VALLEY COMMUNITY COLLEGE LEARNING RESOURCE CENTER/LIBRARY ADDITION

STRUCTURAL ENGINEER	Bulmer, Lyn and Associates	
MECHANICAL ENGINEER	VanBoerum and Frank	
ELECTRICAL ENGINEER	Bechtner, Nielson and Associates	
LANDSCAPE ARCHITECT	MGB and Associates	DRAWN BY:
INTERIOR DESIGNER	Don Harward	CHECKED BY:

MONSTER ENGINEERING CORPORATION

Scott, Louie and Browning
architects, engineers, planners
A Professional Corporation, Salt Lake City, Utah 84115

Utah Valley Community College
Learning Resource Center/Library Addition
Orem, Utah DFCM Project No. RV:90-014

MP-1
Feb. 10, 1991

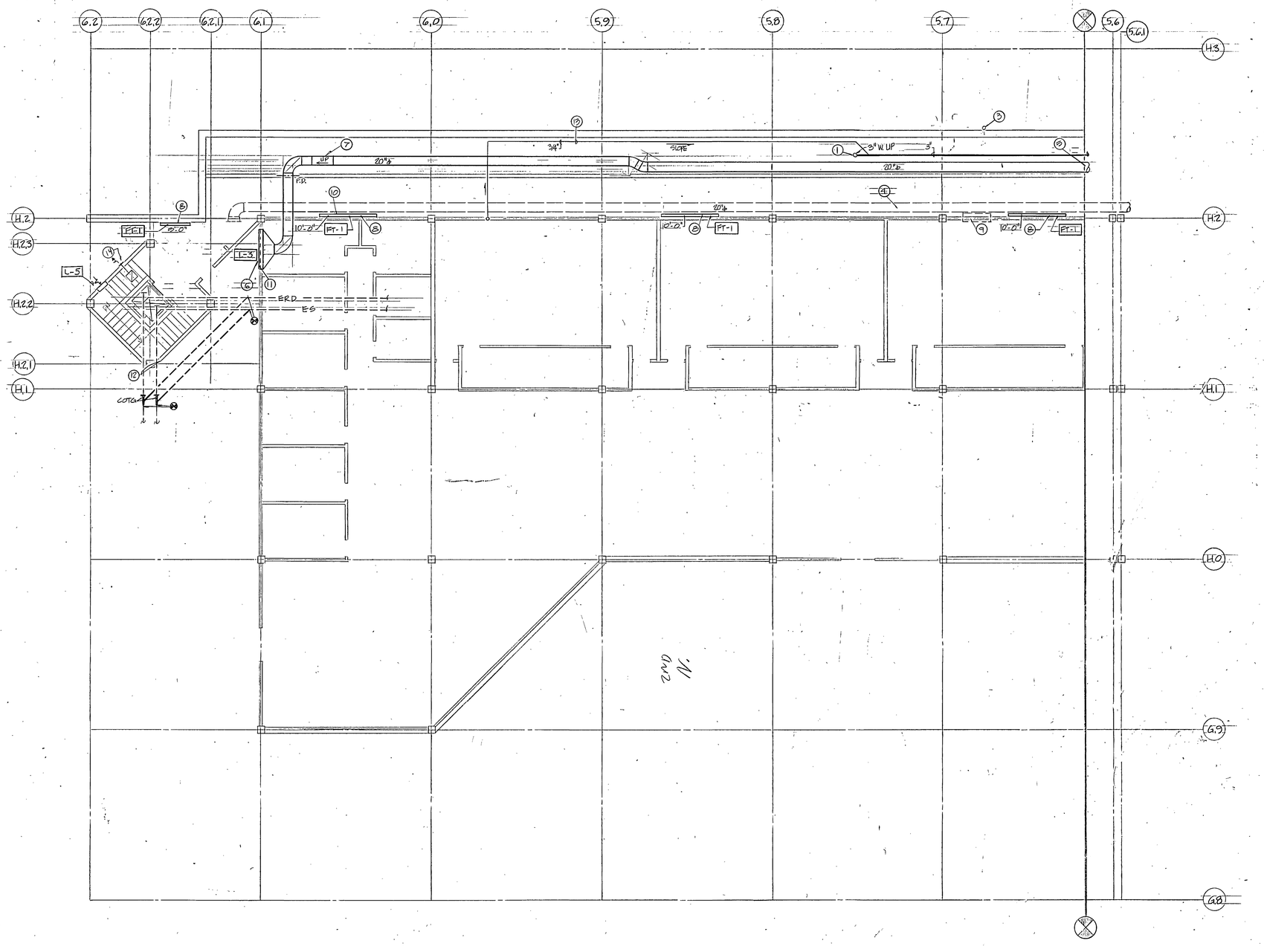

N

LEVEL TWO MECHANICAL, PLUMBING AND DEMOLITION NORTH PLAN

SCALE: 1/8" : 1'-0"

KEYED NOTES

1. NEW IN CEILING SPACE WASTE UP TO FLOOR ABOVE.
2. SLEAVE THROUGH WALL.
3. EXISTING 3" WASTE UP TO RENAIN
4. EXISTING 20" EXHAUST LINE TO BE REMOVED AND RELOCATED INTO NEW MECHANICAL CORRIDER AS SHOWN.
5. NEW POSITION OF EXHAUST DUCT. EXISTING DUCT IS TO BE REUSED. ADD NEW DUCT AS NECESSARY.
6. NEW EXHAUST AIR LOUVER.
7. EXHAUST DUCT IS TO TRANSISTION UP AS REQUIRED IN ORDER TO PASS OVER NEW CORRIDER.
8. NEW ELECTRIC FIN TUBE BASE BOARD HEATERS.
9. EXISTING FLOOR HEATER IS TO BE REMOVED.
10. CORE DRILL THRU WALL.
11. SAW CUT WALL.
12. REROUTE EXISTING LINES TO AVOID NEW CONSTRUCTION.
13. RUN CONDENSATE LINE IN CEILING SPACE. TIE INTO 3" WASTE LINE.

14 WALL CAP

0000AQM2
Utah Valley Community College, Learning Resource Center - RV 90-014
Mechanical Plumbing and Demo Level 2 North - 7245

REGISTERED PROFESSIONAL ENGINEER No. 3075 J. LANDWARD VAN BOEKUM State of Utah

AS BUILTS

UTAH VALLEY COMMUNITY COLLEGE LEARNING RESOURCE CENTER/LIBRARY ADDITION

STRUCTURAL ENGINEER	Bsumek, Mu and Associates		
MECHANICAL ENGINEER	Vanbeerum and Frank		
ELECTRICAL ENGINEER	Becherer, Nielson and Associates		
LANDSCAPE ARCHITECT	MBB and Associates	DRAWN BY	
INTERIOR DESIGNER	Don Harward	CHECKED BY	

Scott, Louie and Browning
architects engineers planners
185 Vanderbilt Avenue, Salt Lake City, Utah 84115

Utah Valley Community College
Learning Resource Center/Library Addition
Orem, Utah DFCM Project No. RV-90-014

MP-2

Feb. 18, 1991

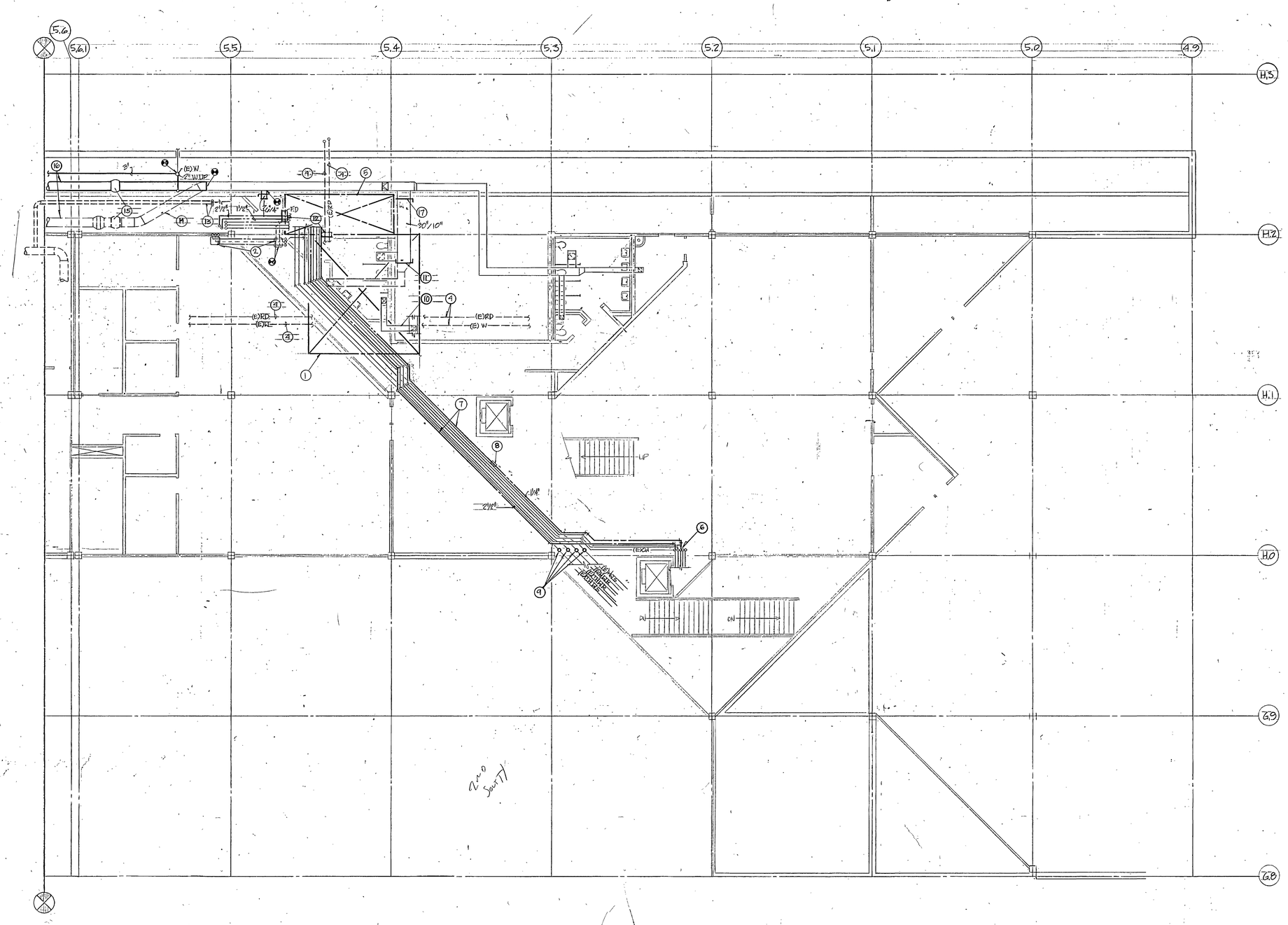

KEYED NOTES

1. SEE 1/4 SCALE PIPING PLAN FOR PLUMBING WORK IN THIS AREA. SHEET M-11.
2. RELOCATE EXISTING SINK TO NEW POSISTION AS SHOWN ON ARCHITECTURAL DRAWING A-2. EXTEND EXISTING HW, CW, W, AND V LINES OVER TO SERVE RELOCATED SINK.
3. EXISTING FIXTURES AND PIPING TO REMAIN.
4. EXISTING WASTE AND RAIN DRAIN LINES BELOW GRADE TO REMAIN.
5. FOR PIPING IN THIS AREA SEE 1/4 SCALE PUMP ROOM PLAN. SHEET M-11.
6. CONNECT NEW 2 1/2" CW AND 1 1/4" HW LINES TO EXISTING TEES.
7. NEW 2 1/2 CW AND 1 1/2" HW LINES SERVING 4TH LEVEL. RUN LINES PARALLEL TO EXISTING MAINS, ABOVE CHILLED AND HEATING WATER LINES.
8. PROVIDE AN EXPANSION JOINT IN HW LINE.
9. CONNECT NEW 5" CHWS, 5" CHWR, 4" HWR, AND 4" HWS TO EXISTING TEES. RISE UP TO CEILING OF THIRD LEVEL. SEE SHEET M-5. INSTALL NEW SHUT-OFF AND DRAIN VALVES AT CONNECTION POINT.
10. EXISTING SUPPLY AIR DUCTWORK TO REMAIN AS SHOWN.
11. EXISTING EXHAUST DUCTWORK FROM ELEVATOR EQUIPMENT ROOM IS TO BE REMOVED AND CAPPED AS SHOWN.
12. EXISTING TRANSFER GRILLE FROM PUMP ROOM TO ELEVATOR EQUIPMENT ROOM IS TO BE RELOCATED AS SHOWN.
13. EXISTING SUPPLY AIR DUCTWORK AND FLOOR GRILLE ARE TO REMAIN IN THE NEW CORRIDOR AS SHOWN.
14. EXISTING EXHAUST DUCT IS TO BE REMOVED AND RELOCATED.
15. RELOCATE EXISTING EXHAUST FAN.
16. SEE SHEET M-2 FOR CONTINUATION OF DUCTWORK.
17. ADD OBD IN EXISTING DUCTWORK.

N

LEVEL TWO MECHANICAL, PLUMBING AND DEMOLITION SOUTH PLAN

SCALE: 1/8" : 1'-0"

0000AQM3
Utah Valley Community College, Learning Resource Center - RV 90-014
Mechanical Plumbing and Demo Level 2 South - 7246

MONTANA PROFESSIONAL ENGINEER No. 3075 J. HOWARD WOLBERSEN State of Utah

AS BUILTS

UTAH VALLEY COMMUNITY COLLEGE LEARNING RESOURCE CENTER/LIBRARY ADDITION

STRUCTURAL ENGINEER	Bennett, Alt and Associates	
MECHANICAL ENGINEER	Vanbeurum and Frank	
ELECTRICAL ENGINEER	Tschierer, Nielson and Associates	
LANDSCAPE ARCHITECT	MGB and Associates	DRAWN BY:
INTERIOR DESIGNER	Don Harward	CHECKED BY:

Scott, Louie and Browning
architects, engineers, planners

Utah Valley Community College
Learning Resource Center/Library Addition
Orem, Utah DFCM Project No. RV 90-014

MP-3

Feb. 18, 1991

BORDER ENGINEERING CO. /408687

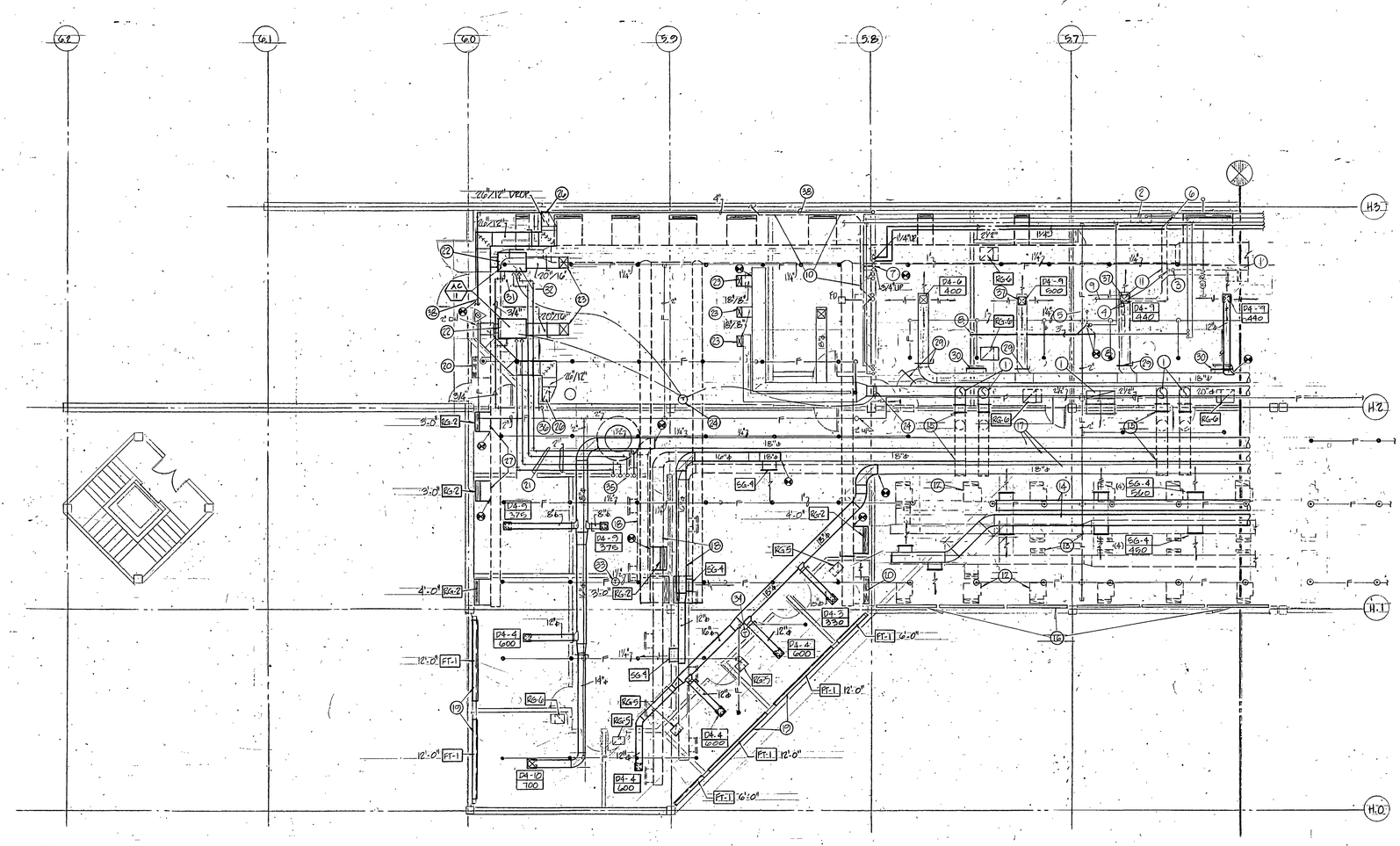

N

LEVEL THREE MECHANICAL, PLUMBING AND DEMOLITION NORTH PLAN

SCALE: 1/8" : 1'-0"

KEYED NOTES

1. DUCTWORK BOOT IS TO BE LINED.
2. REMOVE SINK. REMOVE WASTE LINE BACK TO FLOOR SLAB AND CAP.
3. REMOVE VENT LINE BACK TO FLOOR SLAB AND CAP.
4. REMOVE VENT IN CEILING SPACE AND IN WALL THAT IS BEING REMOVED. CAP LINE AS IT ENTERS FLOOR SLAB OF 4TH LEVEL.
5. REMOVE WASTE LINE IN CEILING SPACE AND IN WALL THAT IS BEING REMOVED, DOWN TO FLOOR LEVEL. COORDINATE WITH SHEET M-2.
6. REMOVE AND CAP HOT AN COLD WATER LINES AT FLOOR SLAB, AND AS THEY TEE OFF MAIN WATER LINES.
7. CONNECT NEW HWR LINE TO EXISTING.
8. RECONNECT WASTE LINE FROM WATER COOLER AND SERVICE SINK ON FLOOR ABOVE TO NEW WASTE LINE. RUN OVER TO NEW WALL AND DROP TO FLOOR BELOW.
9. FOR CONTINUATION SEE SHEET M-2.
10. REMOVE WASTE LINE IN CEILING SPACE AND CAP. ALSO CAP AS LINE ENTERS EAST WALL.
11. EXISTING WASTE UNDER SLAB WITH A 3" DROP DOWN TO 2ND LEVEL.
12. REMOVE EXISTING RETURN AIR REGISTERS AND BOSTS, TYPICAL.
13. REMOVE EXISTING SUPPLY AIR DUCTWORK AND DIFFUSERS AS SHOWN.
14. INSTALL NEW SUPPLY AIR DUCTWORK AND GRILLES AS SHOWN. DUCT IS TO BE 18" ROUND.
15. REMOVE EXISTING TRANSFER AIR DUCTWORK AND RELOCATED EXISTING TRANSFER GRILLE TO NEW POSITION SHOWN, TYPICAL.
16. EXISTING BASE BOARD HEATERS ARE TO REMAIN.
17. EXISTING 18" ROUND SUPPLY AIR DUCTWORK IS TO REMAIN.
18. REMOVE EXISTING 18" ROUND SUPPLY AIR DUCTWORK AND SUPPLY GRILLES AS SHOWN.
19. EXISTING FIN TUBE IS TO BE REMOVED AND REPLACED WITH NEW FIN TUBE RADIANT HEATERS
20. REMOVE AND CAP RETURN AIR GRILLES AND DUCTWORK AS SHOWN. REPAIR AND PATCH FLOOR.
21. GLYCOL WATER SUPPLY AND RETURN LINES.
22. AIR CONDITIONING UNITS ARE TO BE HUNG FROM CEILING AS HIGH AS POSSIBLE.
23. SUPPLY AIR DUCTWORK IS TO BE EXTENDED INTO STUDIO SPACE AND TURNED UPWARD AT A 45 DEGREE ANGLE. NO DIFFUSER IS REQUIRED ON DUCTWORK.
24. A THERMOSTAT WITH OFF/ON CAPABILITIES IS TO BE INSTALLED AND CONNECTED TO AIR CONDITIONING UNITS. A MOTORIZED DAMPER IS ALSO TO BE INSTALLED AND CONNECTED TO THIS THERMOSTAT.
25. EXISTING SUPPLY DUCTWORK AND GRILLES TO BE REMOVED AND REPLACED WITH NEW AS SHOWN.
26. RETURN AIR IS TO DROP DOWN TO 3'-0" ABOVE FLOOR.
27. INSTALL NEW FLOOR RETURN AIR GRILLES AND CONNECT TO DUCTWORK.
28. REMOVE EXISTING TRANSFER GRILLES AND REPAIR WALL.
29. INSTALL OBD IN EXISTING DUCT.
30. CAP DUCTWORK.
31. RELOCATE LIGHT FIXTURE AND FIRE LINES TO INSTALL NEW AC-1 UNITS. (SUPPORT AC-1 FROM STRUCTURE WITH ISOLATION RODS.)
32. BOTTOM OF AC-1 FROM FLOOR IS APPROXIMATELY 10'-6".
33. RELOCATED T' STAT FOR ZONE #3.
34. RELOCATED T' STAT FOR ZONE #5.
35. RISE PIPING TO REMOTE UNITS ON ROOF.
36. DROP 3/4" CONDENSATE LINE DOWN WALL. CORE DRILL THRU FLOOR. SEE MP-2 FOR CONTINUATION.
37. INSTALL NEW DIFFUSER AND DUCTWORK ON END OF DUCT.
38. EXTEND FIRE MAIN TO NEW FOURTH LEVEL MECHANICAL ROOM.

0000AQM4
Utah Valley Community College, Learning Resource Center - RV 90-014
Mechanical Plumbing and Demo Level 3 North - 7247

REGISTERED PROFESSIONAL ENGINEER No. 3075 HOWARD J. VANBOERUM State of Utah

AS BUILTS

UTAH VALLEY COMMUNITY COLLEGE LEARNING RESOURCE CENTER/LIBRARY ADDITION

STRUCTURAL ENGINEER	Bsumek, Hu and Associates	
MECHANICAL ENGINEER	VanBoerum and Frank	
ELECTRICAL ENGINEER	Bezlerre, Nelson, and Associates	DRAWN BY:
LANDSCAPE ARCHITECT	MGB and Associates	CHECKED BY:
INTERIOR DESIGNER	Don Harward	

SCHEMEN ENGINEERING CO. 1988-87

Scott, Louie and Browning
architects/engineers/planners
5150 Holladay Boulevard Salt Lake City, Utah 84117

Utah Valley Community College
Learning Resource Center/Library Addition
Orem, Utah DFCM Project No. RV 90-014

MP-4
(Feb. 10, 1991)

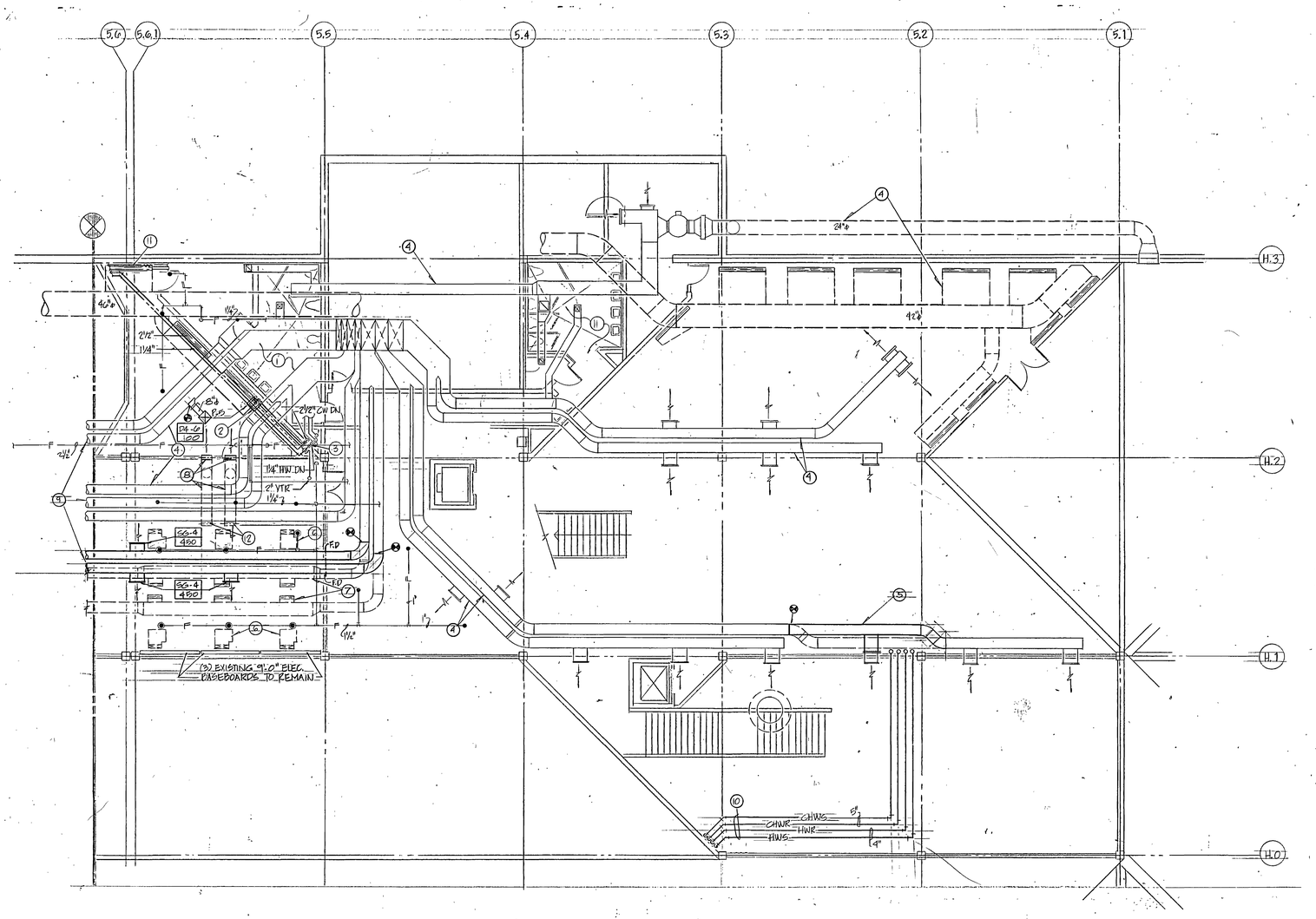

N

LEVEL THREE MECHANICAL, PLUMBING AND DEMOLITION SOUTH PLAN

SCALE: 1/8" : 1'-0"

KEYED NOTES

1. ALL FIXTURES TO REMAIN UNCHANGED
2. NEW COUNTER SINK CONNECT HOT AND COLD WATER LINES UNDER COUNTER AND RUN TO END OF COUNTER AS SHOWN. RUN EXPOSED UP WALL. CONNECT HW AND CW LINES TO NEW WATER MAINS IN CIELING SPACE. RUN VENT THROUGH WALL AND OUT TO ROOF. RUN WASTE THROUGH FLOOR TO EXISTING WASTE IN FLOOR BELOW. SEE SHEET M-3.
3. SLEEVE THRU WALL.
4. EXISTING MECHANICAL SYSTEMS TO REMAIN UNCHANGED.
5. RELOCATE EXISTING SUPPLY AIR DUCTWORK AS SHOWN TO PROVIDE ROOM FOR NEW MECHANICAL PIPING.
6. REMOVE EXISTING RETURN AIR REGISTERS AND BOOTS, TYPICAL.
7. REMOVE EXISTING SUPPLY AIR DUCTWORK AND GRILLES AS SHOWN ON DRAWING.
8. EXISTING TRANSFER AIR DUTWORK AND EXISTING RETURN AIR GRILLES TO REMAIN.
9. SEE SHEET M-4 FOR CONTINUATION OF DUCTWORK, TYPICAL.
10. SUPPORT PIPING FROM WALLS AND STRUCTURE SAME AS EXISTING PIPING.
11. CUT FLOOR GRILLE AND REINSTALL AFTER WALL IS INSTALLED.
12. INSTALL NEW GRILLES, FIELD VERIFY SIZE.

0000AQM5
Utah Valley Community College, Learning Resource Center - RV 90-014
Mechanical Plumbing and Demo Level 3 South - 7248

REGISTERED PROFESSIONAL ENGINEER No. 3075 J. HOWARD VAN BOEKUM State of Utah

AS BUILTS

UTAH VALLEY COMMUNITY COLLEGE LEARNING RESOURCE CENTER/LIBRARY ADDITION

STRUCTURAL ENGINEER	Bsumek, MJ and Associates		
MECHANICAL ENGINEER	VanBoerum and Frank		
ELECTRICAL ENGINEER	Bechterer, Nielson and Associates		
LANDSCAPE ARCHITECT	MGB and Associates	DRAWN BY	
INTERIOR DESIGNER	Don Harward	CHECKED BY	

Scott, Louie and Browning
architects, engineers, planners
4760 Holladay Boulevard, Salt Lake City, Utah 84117

Utah Valley Community College
Learning Resource Center/Library Addition
Orem, Utah DFCM Project No. RV-90-014

MP-5
Feb. 18, 1991

MONSEN ENGINEERING CO. 108697

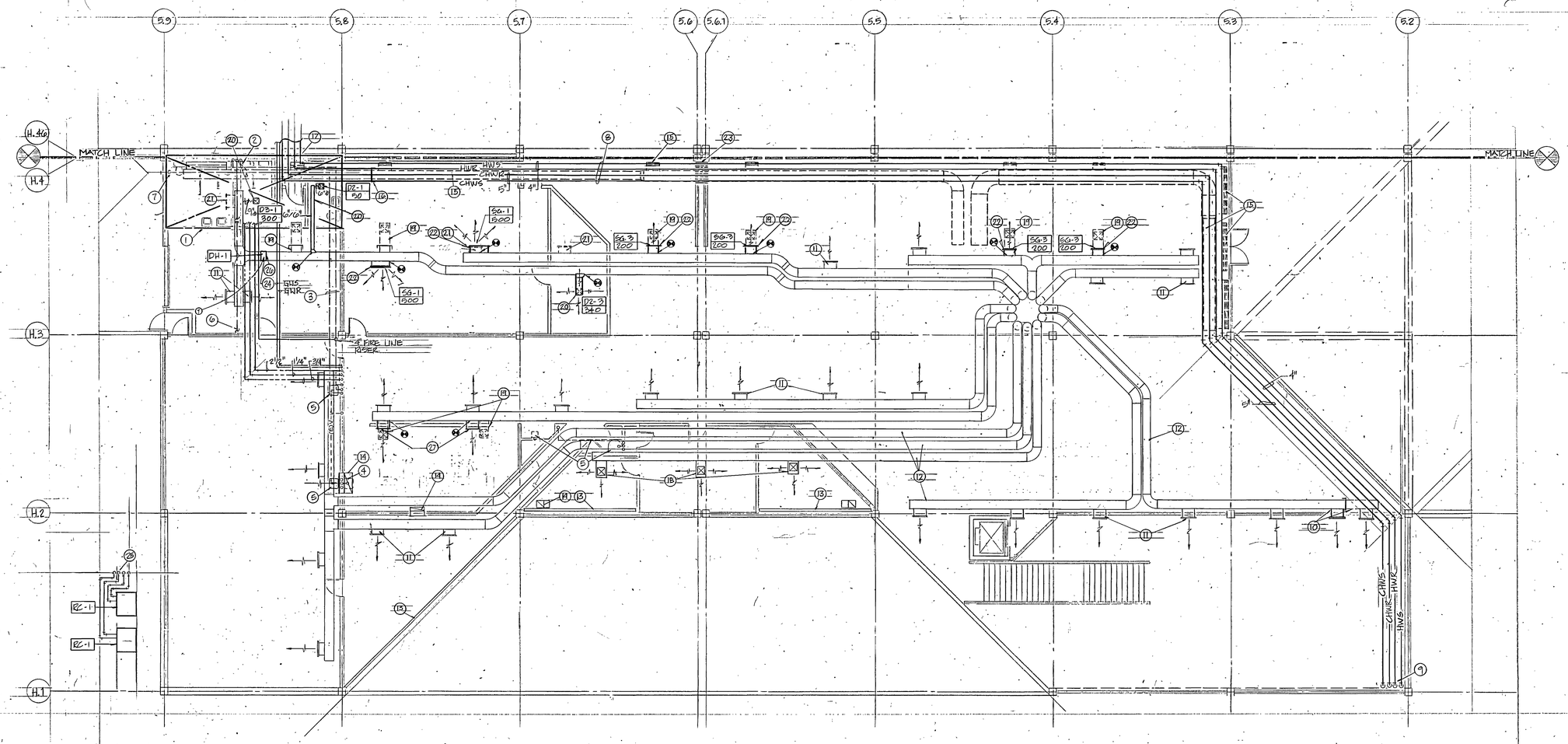

N

LEVEL FOUR MECHANICAL AND PLUMBING AND DEMOLITION WEST PLAN

SCALE: 1/8" : 1'-0"

KEYED NOTES

1. SEE 1/4 SCALE DRAWING FOR CONTINUATION. SHEET M-10.
2. REMOVE SINK CARRIER AND ASSOCIATE PIPING BACK TO MAINS. REMOVE VENT LINE AND PATCH ROOF. REMOVE WASTE LINE UNDER SLAB AT POINTS CONFLICTING WITH NEW PLUMBING IN THIS AREA. SEE 1/4 SCALE PLAN. SHEET M-10.
3. REMOVE HOT AND COLD WATER LINES BACK TO WALL AND CAP.
4. REMOVE SINK CAP WASTE, HOT AND COLD LINES.
5. EXISTING PLUMBING TO REMAIN.
6. FOR CONTINUATION SEE SHEET M-4.
7. EXISTING HOSE BIBB TO REMAIN. SEE 1/4 SCALE PLAN FOR NEW PIPING. SHEET M-10.
8. NEW 4" HWS, 4" HWR, 5" CHWR, AND 5" CHWS SERVING MECHANICAL ROOM IN NEW WING.
9. RUN NEW LINES FROM CEILING OF 3RD LEVEL UP WALL TO CELING OF 4TH LEVEL. FOR CONTINUATION SEE SHEET M-5.
10. REMOVE END PORTION OF SUPPLY AIR DUCT AS SHOWN AND RELOCATE SUPPLY GRILLE TO NEW POSISTION.
11. EXISTING SUPPLY GRILLES TO REMAIN, TYPICAL.
12. EXISTING SUPPLY AIR DUCTWORK TO REMAIN, TYPICAL.
13. EXISTING BASE BOARD RADIANT HEAT TO REMAIN.
14. EXISTING RETURN AIR GRILLES AND BOSTS IN CEILING PLENUM ARE TO REMAIN, TYPICAL.
15. EXISTING RETURN AIR DUCTWORK BELOW THE FLOOR AND RETURN AIR FLOOR GRILLES ARE TO REMAIN, TYPICAL.
16. RETURN-AIR DUCTWORK IS TO BE REMOVED AND CAPPED AT THIS POINT. FLOOR GRILLES BEYOND THIS POINT ARE TO BE REMOVED AND THE FLOOR PATCHED AS NEEDED.
17. HOT WATER AND CHILLED WATER SUPPLY AND RETURN LINES ARE TO BE EXTENDED INTO 4TH LEVEL MECHANICAL ROOM. SEE SHEET M-9 FOR CONTINUATION OF PIPING.
18. EXISTING SUPPPLY AIR DUCTWORK AND DIFFUSER IS TO REMAIN.
19. REMOVE EXISTIING SUPPLY AIR DUCT AND DIFFUSER. REPAIR CELING AS NEEDED AND PATCH DUCTWORK.
20. EXTEND NEW DUCTWORK AND INSTALL DIFFUSERS, AS SHOWN.
21. REMOVE EXISTING SUPPLY GRILLE AND DUCTWORK TO GRILLE AND PATCH DUCTWORK.
22. INSTALL NEW SUPPLY GRILLES AND THE CONNECTING DUCTWORK AS SHOWN.
23. CORE DRILL OPPENINGS THROUGH BEANS FOR NEW PIPING. X-RAY BEFORE DRILLING TO AVOID REBAR.
24. ELECTRICAL DUCT HEATER.
25. SUPPORT LINES FROM ROOF. DROP LINES TO 3RD LEVEL.
26. TRANSITION TO AND FROM DUCT HEATER FIELD. VERIFY EXACT SIZE.
27. INSTALL NEW S.A. GRILLE IN EXISTING DUCTWORK MATCH EXISTING S.A. GRILLES.

AS BUILTS

0000AQM6
Utah Valley Community College Learning Resource Center - RV 90-014
Mechancal Plumbing and Demo Level 4 West - 7249

REGISTERED PROFESSIONAL ENGINEER No. 130224 Kevin Pulsipher State of Utah

UTAH VALLEY COMMUNITY COLLEGE LEARNING RESOURCE CENTER/LIBRARY ADDITION

STRUCTURAL ENGINEER	Baumer, Mu and Associates	DRAWN BY:	
MECHANICAL ENGINEER	VanBoerum and Frank	CHECKED BY:	
ELECTRICAL ENGINEER	Becherer, Nelson and Associates		
LANDSCAPE ARCHITECT	MCB and Associates		
INTERIOR DESIGNER	Don Harward		

Scott, Louie and Browning
architects, engineers, planners
Salt Lake City, Utah

Utah Valley Community College
Learning Resource Center/Library Addition
Orem, Utah DFCM Project No. RV:90-014

MP-6
Feb. 16, 1991

MORSER ENGINEERING CO. 108857

KEYED NOTES

1. SEE SHEET M-9 FOR CONTINUATION OF DUCTWORK.
2. INSTALL SUPPLY GRILLES AT 45 DEGREE ANGLE.
3. NEW SUPPLY GRILLE. SEE SCHEDULE FOR DIMENSIONS AND SPECIFICATIONS, TYPICAL.
4. ALL DUCTWORK IS TO BE INSTALLED IN MECHANICAL CLEAR SPACES AS DETERMINED BY STRUCTURAL RESTRICTIONS, TYPICAL.
5. DIFFUSERS ARE TO BE HARD DUCTED TO SUPPLY AIR DUCT WORK.
6. VOLUME DAMPERS ARE TO BE INSTALLED IN ALL BRANCH DUCTWORK, TYPICAL.
7. RETURN AIR DUCTWORK TO BE RUN BELOW GRADE. SEE DETAIL FOR INSTALLATION REQUIREMENTS, TYPICAL.
8. NEW FIN TUBE. SEE SCHEDULE FOR DIMENSIONS AND SPECIFICATIONS, TYPICAL.
9. THERMOSTAT FOR ZONE #4
10. THERMOSTAT FOR ZONE #3
11. THERMOSTAT FOR ZONE #2
12. THERMOSTAT FOR ZONE #1
13. RELIEF AIR LOUVERS LOCATED IN UPPER PORTION OF LIBRARY EXPANSION. SEE ARCHITECTURAL DRAWINGS FOR EXACT OF LOUVERS, TYPICAL.
14. COORDINATE DUCTWORK WITH HANGING LIGHT FIXTURES.

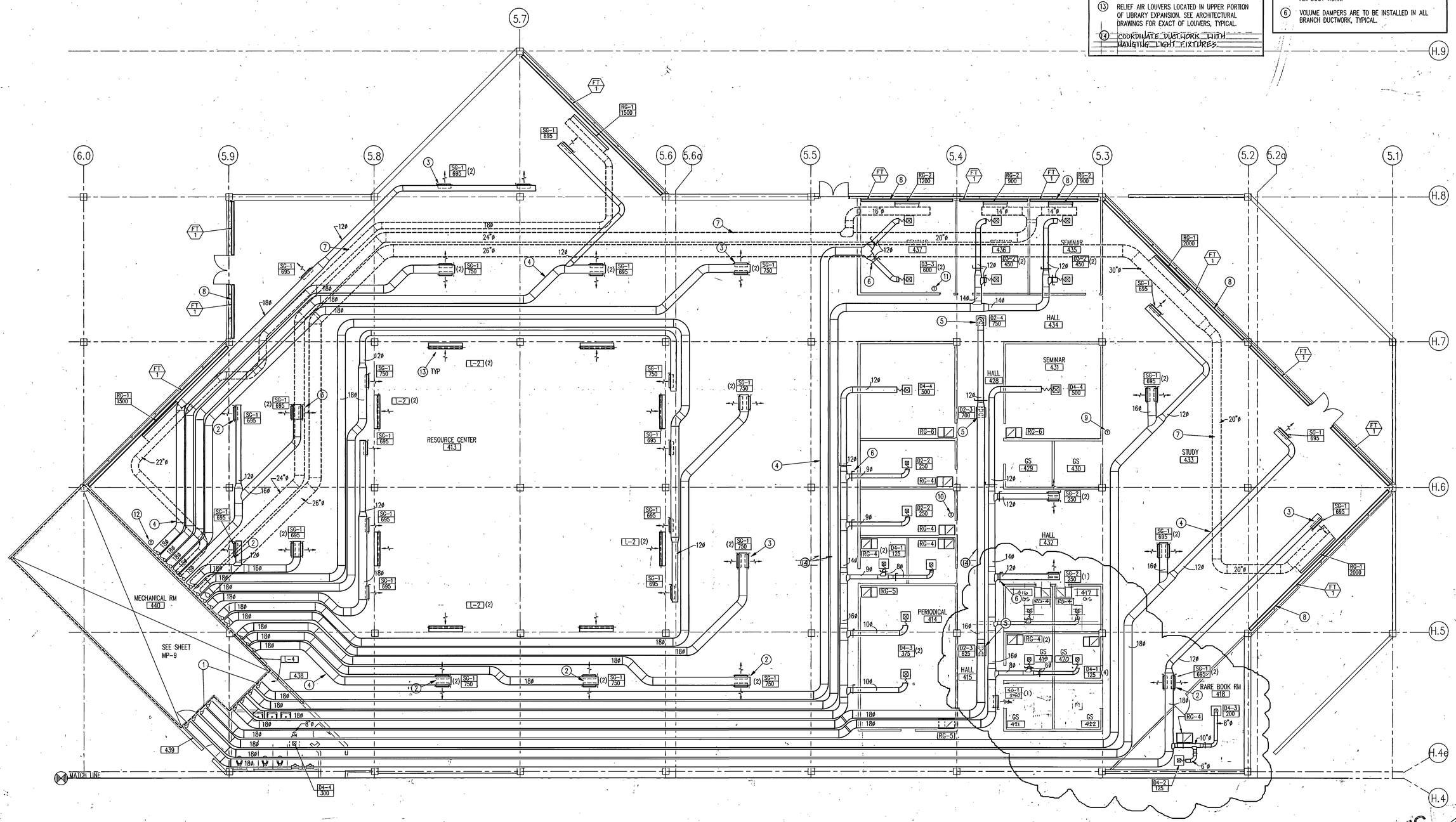

FOURTH FLOOR MECHANICAL PLAN

SCALE 1/8"=1'-0"

0000AQM7
Utah Valley Community College; Learning Resource Center - RV:90-014
Mechanical Level 4 East - 7250

AS BUILTS

ARCHITECTED PROFESSIONAL ENGINEER
No. 3078
Jay Hardy Boeckum
State of Utah

1389AM4 2-7-91
1389\\1389DM4

UTAH VALLEY COMMUNITY COLLEGE LEARNING RESOURCE CENTER/LIBRARY ADDITION

STRUCTURAL ENGINEER	: Bsumek Mu and Associates
MECHANICAL ENGINEER	: VanBoerum and Frank
ELECTRICAL ENGINEER	: Becherer Nielson and Associates
LANDSCAPE ARCHITECT	: MGB and Associates
INTERIOR DESIGNER	: Don Harward

DRAWN BY:
CHECKED BY:

Scott, Louie and Browning
architects, engineers, planners
4766 Holladay Boulevard, Salt Lake City, Utah 84117

Utah Valley Community College
Learning Resource Center/Library Addition

Orem, Utah DFCM Project No. RV:90-014

MHP-7
Feb. 18, 1991

KEYED NOTES

4. SEE SITE PLAN FOR CONTINUATION.
5. NEW 5" CHWS, 5" CHWR, 4" HWR, 4" HWS. SERVING MECHANICAL ROOM. SEE 1/4 SCALE PLAN SHEET M-9.
6. DROP CW LINE IN WALL.
7. DROP WATER LINE TO FLOOR AND RUN TO HOSE BIB.
8. ALL RDO SYSTEMS ARE N10.

1. SEE 1/4 SCALE PLUMBING PLAN FOR PIPING IN THIS AREA.
2. ROOF DRAIN ON UPPER LEVEL. RUN VERTICAL PIPING DOWN SIDE OF COLUMN BETWEEN EXTERIOR WALL AND INTERIOR STRUCTURE. EXIT BUILDING WITH A ONE WORD NOZZLE AT 6" ABOVE LOWER ROOF LEVEL. SEE DETAIL ON SHEET M-10.
3. RUN RAIN DRAIN LEADER ABOVE AIR DUCTS IN STRUCTURE SPACE, DOWN UNDER BEAM, OVER TO FACE OF COLUMN B, DOWN FACE OF COLUMN B INTO SLAB UNDER SCAB TO MAIN LINE. PROVIDE CLEAN OUT INVERTICAL PIPE, TYPICAL.

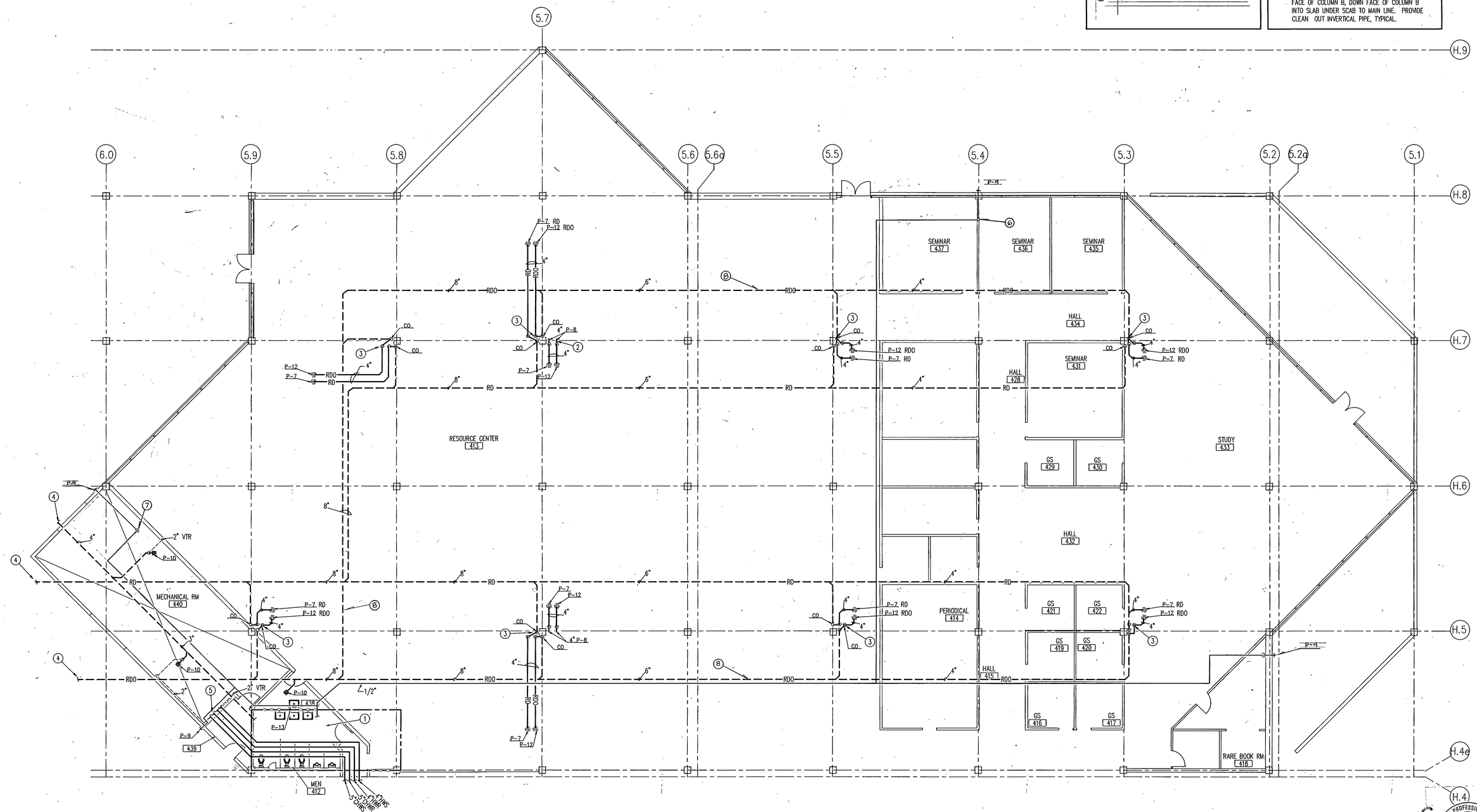

FOURTH FLOOR PLUMBING PLAN

SCALE 1/8"=1'-0"

0000AQM8
Utah Valley Community College, Learning Resource Center - RV 90-014
Plumbing Level 4 East - 7251

AS BUILTS

REGISTERED PROFESSIONAL ENGINEER No. 3075 J. HOWARD VAN BOERUM State of Utah

1380AP4 2-7-91

UTAH VALLEY COMMUNITY COLLEGE LEARNING RESOURCE CENTER/LIBRARY ADDITION

STRUCTURAL ENGINEER	: Bsumek Mu and Associates
MECHANICAL ENGINEER	: VanBoerum and Frank
ELECTRICAL ENGINEER	: Becherer Nielson and Associates
LANDSCAPE ARCHITECT	: MGB and Associates
INTERIOR DESIGNER	: Don Harward

DRAWN BY: _____
CHECKED BY: _____

Scott, Louie and Browning
architects, engineers, planners
4766 Holladay Boulevard, Salt Lake City, Utah 84117

Utah Valley Community College
Learning Resource Center/Library Addition
Orem, Utah DFCM Project No. RV:90-014

MP-8
Feb. 18, 1991

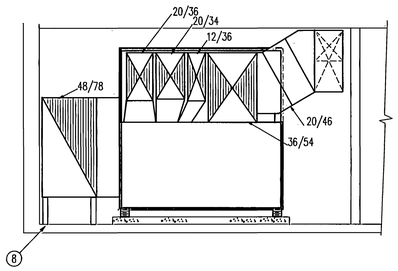

SECTION A M-9
SCALE 1/4"=1'-0"

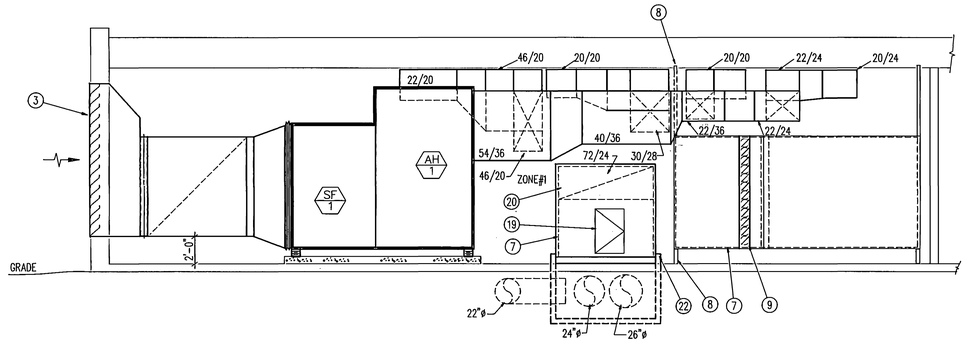

SECTION E M-9
SCALE 1/4"=1'-0"

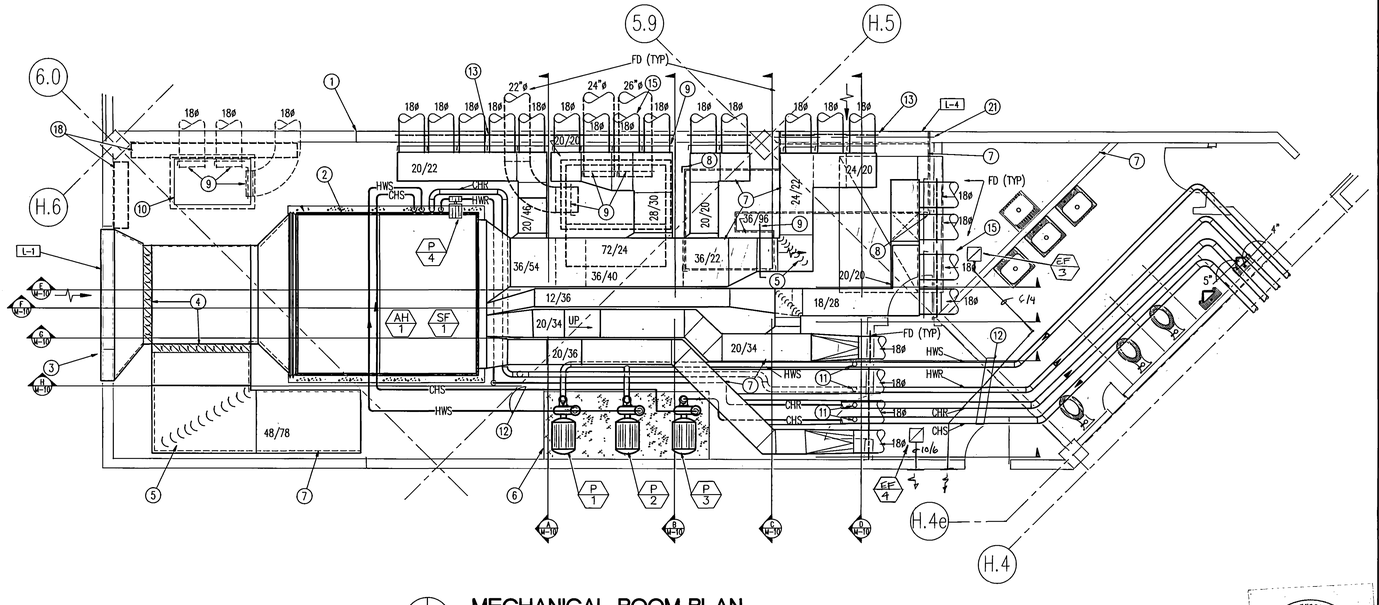

N

MECHANICAL ROOM PLAN
SCALE 1/4"=1'-0"

KEYED NOTES

1. REMOVABLE WALL SECTION. SEE ARCHITECTS DRAWINGS.
2. FLAT FILTER SECTION.
3. OUT SIDE AIR CONTROL.
4. MIXING DAMPERS BY ATC CONTRACTOR.
5. TURNING VANES, TYPICAL.
6. HOUSEKEEPING PAD.
7. SOUND LINING. SEE SPECIFICATION 15800 TYP. OF ALL DUCTWORK IN MECHANICAL FAN ROOM.
8. SUPPORT DUCT FROM FLOOR AND STRUCTURE WITH ANGLE IRON.
9. OBD TYPICAL.
10. 7'x 4'x 5' CONCRETE RETURN AIR PLENUM WITH 6" HIGH CURB AND 2" x 1" REMOVABLE METAL GRATING RECESSED IN CURB. GRATE TO BE IN TWO SECTIONS.
11. VALVES AND CAPED LINES FOR FUTURE USES SEE SCHEMATIC FOR SIZE.
12. SEE SCHEMATIC FOR COMPLETE PIPING AND SIZES.
13. ALL DUCTWORK PENETRATING FAN ROOM WALLS SHALL BE SEALED AIR TIGHT AROUND OPENING, TYPICAL.
14. SAFETY SCREEN TO BE INSTALLED IN RETURN AIR DUCTWORK.
15. SEE SHEET M-7 FOR CONTINUATION OF DUCTWORK, TYPICAL.
16. NOT USED
17. NOT USED
18. ELECTRICAL PANELS
19. 3'x2' ACCESS DOOR
20. SOUND BOOTS
21. FIRE DAMPER IN WALL & LOUVER
22. SHEET METAL ENCLOSURE FLASH DUCTWORK AROUND CURB.

0000AQM9
Utah Valley Community College, Learning Resource Center - RV 90-014
1/4" Scale Mechanical Room Plan and Sections - 7252

REGISTERED PROFESSIONAL ENGINEER No. 13075 J. HOWARD VAN BOEKUM State of Utah

AS BUILTS

1389AMRM 2-7-91

UTAH VALLEY COMMUNITY COLLEGE LEARNING RESOURCE CENTER/LIBRARY ADDITION

STRUCTURAL ENGINEER	: Bsumek Mu and Associates
MECHANICAL ENGINEER	: VanBoerum and Frank
ELECTRICAL ENGINEER	: Becherer Nielson and Associates
LANDSCAPE ARCHITECT	: MGB and Associates
INTERIOR DESIGNER	: Don Harward

DRAWN BY: _____
CHECKED BY: _____

Scott, Louie and Browning
architects, engineers, planners
4766 Holladay Boulevard, Salt Lake City, Utah 84117

Utah Valley Community College
Learning Resource Center/Library Addition
Orem, Utah DFCM Project No. RV:90-014

MP-9
Feb. 18, 1991

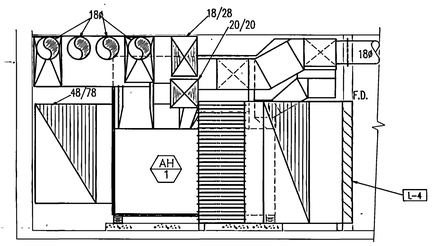

SECTION D M-10
SCALE 1/4"=1'-0"

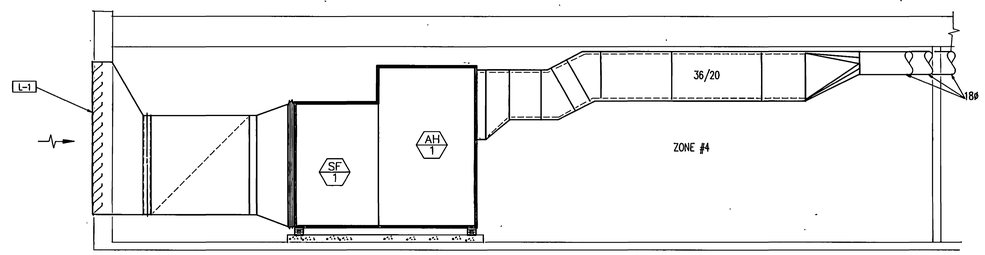

SECTION H M-10
SCALE 1/4"=1'-0"

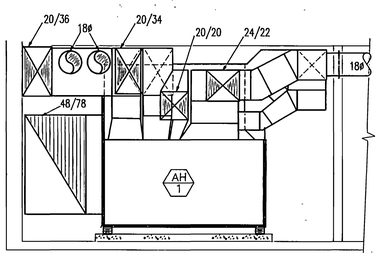

SECTION C M-10
SCALE 1/4"=1'-0"

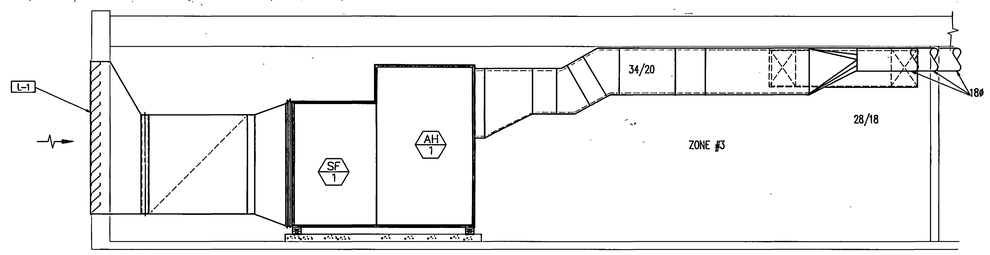

SECTION G M-10
SCALE 1/4"=1'-0"

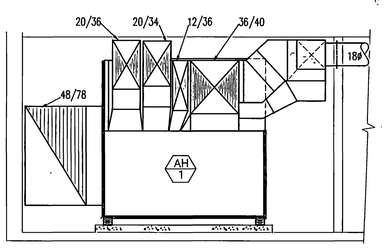

SECTION B M-10
SCALE 1/4"=1'-0"

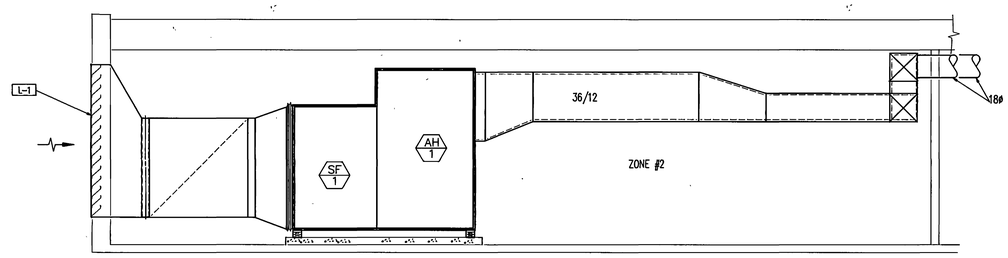

SECTION F M-10
SCALE 1/4"=1'-0"

1389ASEC 2-7-91

0000AQM10
Utah Valley Community College, Learning Resource Center - RV 90-014
1/4" Scale Mechanical Room Sections - 7253

AS BUILTS

REGISTERED PROFESSIONAL ENGINEER No. 3075 J. HOWARD VANBOERUM State of Utah

UTAH VALLEY COMMUNITY COLLEGE LEARNING RESOURCE CENTER/LIBRARY ADDITION

STRUCTURAL ENGINEER	: Bsumek Mu and Associates
MECHANICAL ENGINEER	: VanBoerum and Frank
ELECTRICAL ENGINEER	: Becherer Nielson and Associates
LANDSCAPE ARCHITECT	: MGB and Associates
INTERIOR DESIGNER	: Don Harward

DRAWN BY: _____
CHECKED BY: _____

Scott, Louie and Browning
architects, engineers, planners
4766 Holladay Boulevard, Salt Lake City, Utah 84117

Utah Valley Community College
Learning Resource Center/Library Addition
Orem, Utah DFCM Project No. RV:90-014

MP-10
Feb. 18, 1991

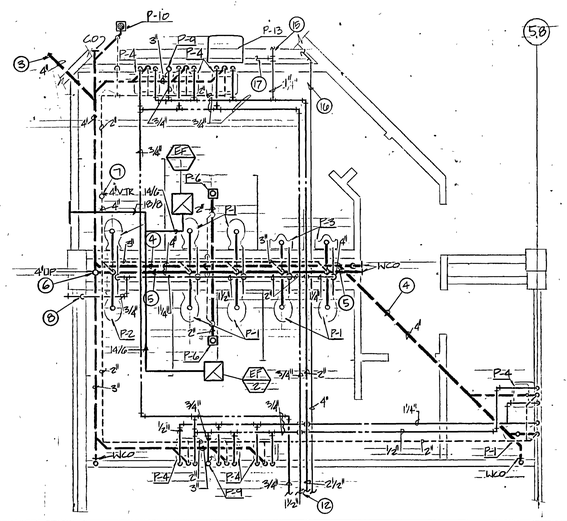

FOURTH LEVEL TOILET ROOMS MECHANICAL & PLUMBING PLAN

SCALE: 1/4": 1'-0"

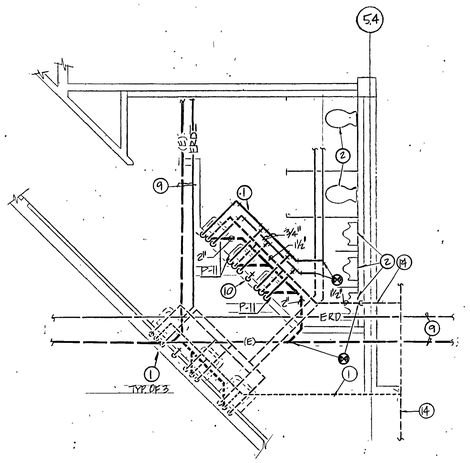

SECOND LEVEL TOILET ROOM PLUMBING PLAN

SCALE 1/4": 1'-0"

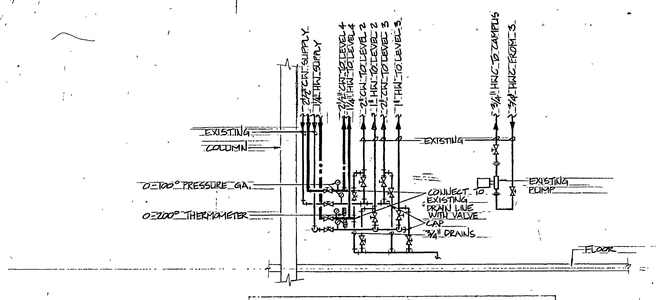

WATER HEATERS SCHEMATIC

NO SCALE

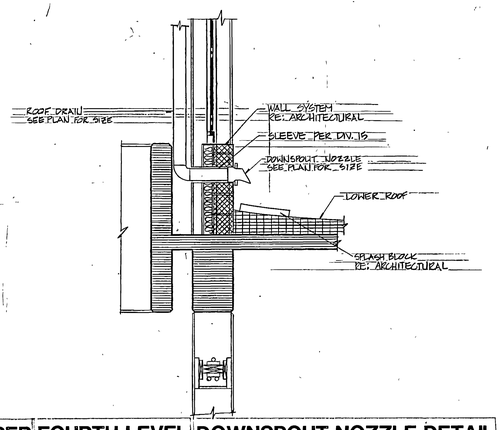

UPPER FOURTH LEVEL DOWNSPOUT NOZZLE DETAIL

NO SCALE

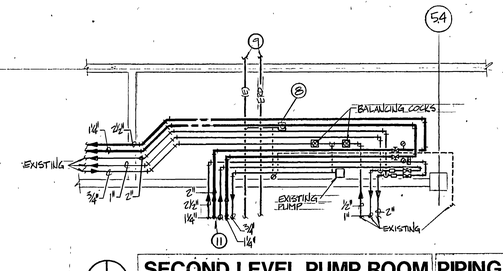

SECOND LEVEL PUMP ROOM PIPING PLAN

SCALE: 1/4":1-0"

KEYED NOTES

1. REMOVE SINK, CARRIER AND ASSOCIATED PIPING BACK TO MAINS. CAP WASTE LINES AT FLOOR LEVEL. RELOCATE SINKS AND CARRIERS TO NEW LOCATION. CONNECT NEW PIPING TO EXISTING AS SHOWN. PROVIDE SINKS WITH NEW FAUCETS.
2. EXISTING FIXTURES AND PIPING TO REMAIN.
3. SEE SHEET M-8 FOR CONTINUATION.
4. RUN WASTE UNDER SLAB.
5. RUN WASTE ABOVE SLAB.
6. DROP WASTE BELOW SLAB AT THIS POINT. EXTEND PIPE UP AND CAP FOR FURTHER EXPANSION.
7. COORDINATE VENT LOCATION WITH DUCT WORK IN THIS AREA.
8. EXISTING WALL HYDRANT TO BE RECONNECTED.
9. EXISTING WASTE WATER AND RAIN DRAIN PIPING BELOW GRADE.
10. RELOCATE EXISTING HOSE BIBB UNDER SINKS IN NEW WALL.
11. FOR CONTINUATION SEE SHEET M-2.
12. FOR CONTINUATION SEE SHEET M-6.
13. WASTE AND RAIN DRAIN PIPING BELOW GRADE.
14. EXISTING VENT TO REMAIN
15. EXTEND TO HOSE BIBBS. SEE SHEET MP-8
16. 4" FIRE LINE TO MECHANICAL ROOM
17. 1" CW LINE, EXTEND TO ELECTRICAL GENERATOR. PROVIDE BALL VALVE & ELECTRIC SOLENOID VALVE FOR DIVISION 1600 HOOK-UP.

REGISTERED PROFESSIONAL ENGINEER No. 3075 J. HOWARD VANBOERUM State of Utah

0000AQM11
Utah Valley Community College, Learning Resource Center - RV 90-014
1/4" Scale Plumbing Plan and Details - 7254

AS BUILTS

UTAH VALLEY COMMUNITY COLLEGE LEARNING RESOURCE CENTER/LIBRARY ADDITION

STRUCTURAL ENGINEER: Bsumek, MJ and Associates
MECHANICAL ENGINEER: VanBoerum and Frank
ELECTRICAL ENGINEER: Becherer, Nielson and Associates
LANDSCAPE ARCHITECT: MGB and Associates
INTERIOR DESIGNER: Don Harward
DRAWN BY:
CHECKED BY:

Scott, Louie and Browning
architects, engineers, planners

Utah Valley Community College
Learning Resource Center/Library Addition
Orem, Utah - DFCM Project No. RV-90-014

MP-11
Feb. 18, 1991

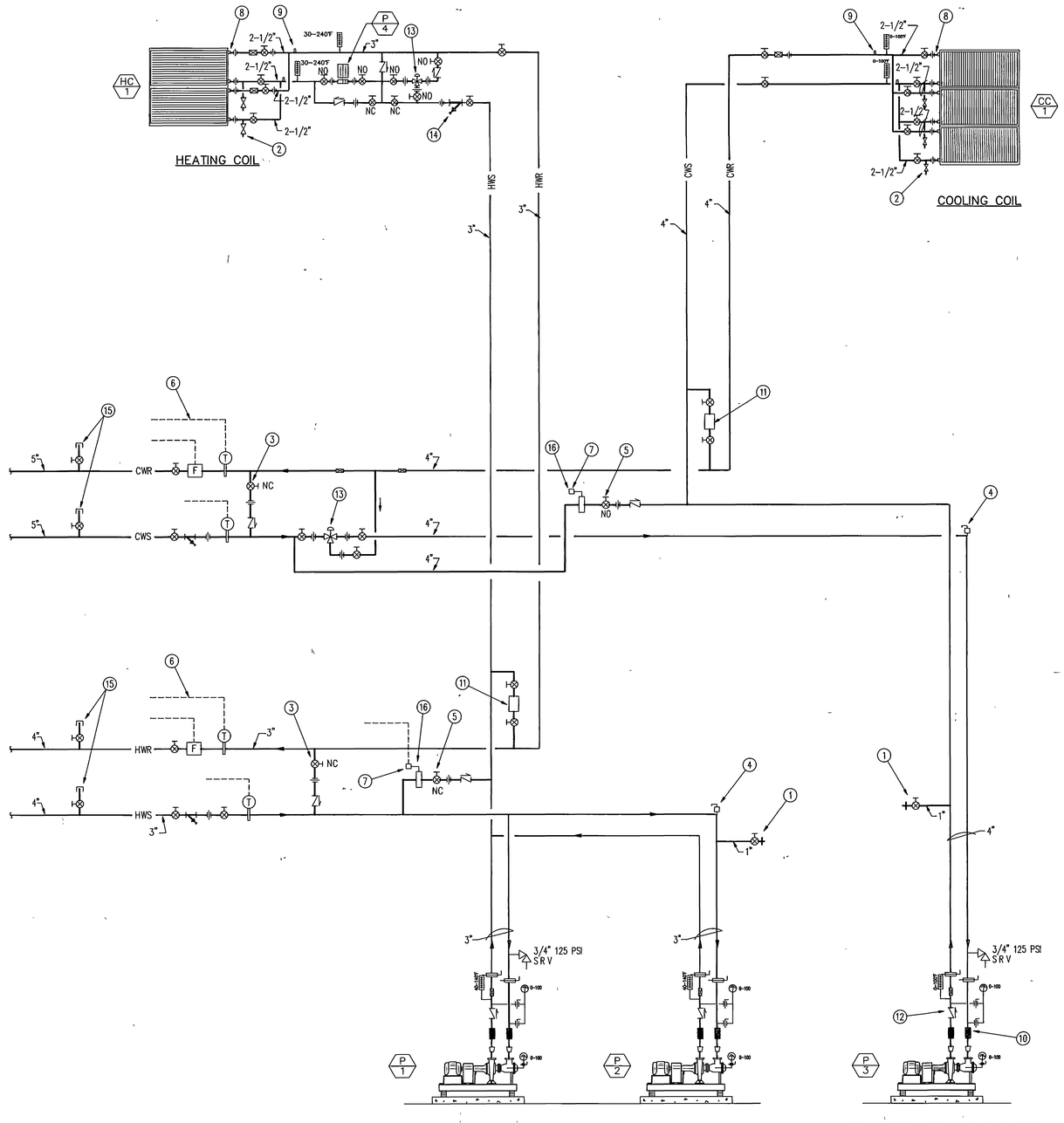

KEYED NOTES

1. FILL LINE VALVE TO BE USED TO FILL SYSTEM FOR INITIAL FLUSH AND CLEANING OF PIPING VALVE TO BE NORMALLY CLOSED PIPE IS TO HAVE THREADED HOSE CONNECTION
2. CONTINUE DRAIN LINE TO NEAREST FLOOR DRAIN
3. SYSTEM FILL. FLUSH AND CIRCULATION PERIOD TO BE INDEPENDENT OF CENTRAL PLANT WATER THIS VALVE TO BE OPENED TO ALLOW WATER TO CIRCULATE.
4. LOCATE AIR VENTS AT ALL HIGH POINTS
5. BYPASS VALVE TO BE USED FOR FUTURE CENTRAL PLANT PUMPING
6. FLOW AND TEMPERATURE SENSORS TO CENTRAL CONTROL PANEL
7. MOTORIZED BUTTERFLY VALVE TO PERMIT DIRECT PUMPING FROM CENTRAL PLANT
8. VENT, TYPICAL
9. PETE'S PLUG, TYPICAL
10. FLEXIBLE CONNECTION TYPICAL
11. PRESSURE DIFFERENTIAL VALVE
12. CHECK VALVE T & P
13. THREE WAY VALVE T & P
14. STRAINER.
15. CAPPED AND VALVED LINES IN MECHANICAL ROOMS FOR FUTURE FIFTH FLOOR ADDITION
16. SECONDARY BYPASS PUMPING VALVE

AS BUILTS

0000AQM12
Utah Valley Community College, Learning Resource Center - RV 90-014
Heating and Chilled Water Schmatic - 7255

REGISTERED PROFESSIONAL ENGINEER No. 3075 J. HOWARD VAN BOEKUM State of Utah

1389APS1 2-6-91

UTAH VALLEY COMMUNITY COLLEGE LEARNING RESOURCE CENTER/LIBRARY ADDITION

STRUCTURAL ENGINEER	: Bsumek Mu and Associates
MECHANICAL ENGINEER	: VanBoerum and Frank
ELECTRICAL ENGINEER	: Becherer Nielson and Associates
LANDSCAPE ARCHITECT	: MGB and Associates
INTERIOR DESIGNER	: Don Harward

DRAWN BY: _____
CHECKED BY: _____

Scott, Louie and Browning
architects, engineers, planners
4766 Holladay Boulevard Salt Lake City Utah 84117

Utah Valley Community College
Learning Resource Center/Library Addition
Orem, Utah DFCM Project No. RV:90-014

MP-12
Feb 18, 1991

ELECTRIC FIN TUBE SCHEDULE

SYMBOL	MANUFACTURERS CATALOG NUMBER	FIN SIZE H" x W"	WATTS PER FT	NO OF ELEMENTS	VOLTAGE	NOTES
FT – 1	CHROMALOX	5 3/4 X 3	188	1	208	(1,2,3,4)

1 COMPLETE WITH PEDESTAL MOUNTS, END CAPS, LEVELING ADJUSTMENTS
2 EXTRUDED ALUMINUM LEGS AND DISCHARGE GRILLE
3 SEE DRAWINGS FOR LENGTH

SC–49

DUCT HEATER

SYMBOL	MANUFACTURER	SIZE	WATTS	NO OF ELEMENTS	VOLTAGE/PHASE
DH – 1	CHROMALOX	FIELD VERIFY	6000	1	208/3

EXHAUST FAN SCHEDULE

FAN TAG	MFR CATALOG NO	SERVICE	FAN CAPACITY						MOTOR			
			CFM	OV FPM	RPM	SP "WC	BHP	WHEEL NO–SIZE	HP	RPM	VOLT	Ø
EF–1 (1)	COOK GEMINI 6–10	MENS ROOM	400	---	1075	0 25	---	6–10	1/12	1750	120	1
EF–2 (1)	COOK GEMINI 6–10	WOMENS ROOM	400	---	1075	0 25	---	6–10	1/12	1750	120	1
EF-3	COOK GEMINI 4-15	JANITORS	50	–	1550	0.20	--	4-15	1/12	1750	120	1
EF-4	COOK GEMINI 5-10	ELECT. GEN	200	–	1050	0.25	--	5-10	1/12	1750	120	1

* FANS DUCTED TOGETHER INTO ONE 6–3/4"X24" WALL CAP (PAINT CAP AS DIRECTED BY ARCHITECT

SC–07

WATER COIL SCHEDULE

SYMBOL	SYSTEM SERVED	SERVICE	TOTAL CFM	No	SIZE W" x H" PER COIL	TOTAL AREA	MIN ROWS/FPI	MAX A P D "W C	TOTAL MBH	AIR TEMP °F		FLUID TYPE	FLUID TEMP °F		TOTAL GPM	WATER P D FT
										EDB/EWB	LDB		EWT	LWT		
CC – 1	AH–1	COOLING	42,000	3	30"x116"	73	8/9	0 5	950	79	55	WATER	47	60	160	13
HC – 1	AH–1	HEATING	42,000	2	24"x113"	38	4/11	1 0	925	61	90	WATER	105	90	125	15

SC–05

SUPPLY FAN SCHEDULE

FAN TAG	MFR CATALOG NO	SERVICE	FAN CAPACITY						MOTOR			
			CFM	OV FPM	RPM	SP –"WG	BHP	WHEEL NO–SIZE	HP	RPM	VOLT	Ø
SF – 1	TRANE TORRIVENT #73 40 25 AF	SUPPLY 4TH LEVEL	42,000	2,000	950	3 75"	43	40 25	50	1750	208	3

SC–06

FILTER SCHEDULE

SYMBOL	TYPE	CFM	MAX VELOCITY FPM	ARRANGMENT	MAX S P DROP	
					INITIAL	FINAL
F – 1	FARR 30/30	42,000	530	FLAT	0 15	0 50

SC–41

AIR HANDLER SCHEDULE

SYMBOL	MFR CATALOG NO	SERVICE	SUPPLY FAN(S)	RETURN FAN(S)	COILS	FILTERS
AH – 1	TRANE CLIMATE CHANGER MULTIZONE	NEW 4TH FLOOR	SF–1	---	HC–1 CC–1	F–1

SC–08

PLUMBING FIXTURE SCHEDULE

SYMBOL	FIXTURE	CW	HW	W	V	REMARKS
P – 1	WATER CLOSET	1	---	4	3	---
P – 2	WATER CLOSET HANDICAP	1	---	4	3	---
P – 3	URINAL	3/4	---	2	1–1/2	---
P – 4	LAVATORY	1/2	1/2	2	1–1/2	---
P – 5	SINK	1/2	1/2	2	1–1/2	---
P – 6	FLOOR DRIAN	---	---	2	1–1/2	---
P – 7	ROOF DRAIN	---	---	4	---	---
P – 8	DOWN SPOUT NOZZLE	---	---	---	---	SEE PLAN FOR SIZES
P – 9	HOSE BIBB	3/4	---	---	---	---
P – 10	FLOOR DRIAN	---	---	3	2	---
P – 11	RELOCATED LAVATORY	1/2	1/2	2	1–1/2	NEW FAUCETS
P-12	ROOF DRAIN (OVERFLOW)	2	2	4	2	
P-13	WALL SINK	1/2	1/2	3	1-1/2	

SC–43

PUMP SCHEDULE

PUMP TAG	MFR CATALOG NO	SERVICE	CAPACITY		EFF %	BHP	MOTOR			
			GPM	HEAD FT WATER			HP	RPM	VOLT	Ø
P – 1	B & G 1510–2 AC	HEATING	100	40	66	1 6	2	1750	208	3
P – 2	B & G 1510–2 AC	HEATING	100	40	66	1 6	2	1750	208	3
P – 3	B & G 1510 2 BC	CHILLED WATER	160	47	63	3 1	5	1750	208	3
P – 4	B & G SERIES 60 2AA	HEATING RECIRC	12	10	45	0 50	3/4	1750	208	3

SC–04

REGISTER AND GRILLE SCHEDULE

SYMBOL	MANUFACTURER	LENGTH	MODEL	LOCATION	REMARKS
RG – 1	KRUEGER	SEE DRAWINGS	1600–6	FLOOR	1,2,3
RG – 2	KRUEGER	SEE DRAWINGS	1600–6	FLOOR	1,2,3
RG – 3	KRUEGER	18X12	S80A	OFFICE 3RD LEVEL	1
RG – 4	KRUEGER	10X10	1190	CEILING	1
RG – 4	KRUEGER	12X12	1190	CEILING	1
RG – 6	KRUEGER	14X14	1190	CEILING	1
RG – 7	KRUEGER	6X6	580A	2ND LEVEL	1

1 WITH OBD
2 CONTINUOUS APPEARANCE
3 EXTRUDED ALUMINUM

SC–03

DIFFUSER SCHEDULE

SYMBOL	MANUFACTURER	SIZE	THROW	MODEL	REMARKS
SG – 1	KRUEGER	32X10	---	880V	W/OBD
SG – 2	KRUEGER	12X8	---	880V	W/OBD
SG – 3	KRUEGER	24X4	---	880V	W/OBD
SG – 4	KRUEGER	24X8	---	880V	W/OBD

SC–02

DIFFUSER SCHEDULE

SYMBOL	MANUFACTURER	SIZE	THROW	MODEL	REMARKS
D2 – 1	KRUEGER	6X6	2–WAY	1100	W/OBD, FRAME 22
D2 – 2	KRUEGER	10X10	2–WAY	1100	W/OBD, FRAME 23 CEILING
D2 – 3	KRUEGER	15X15	2–WAY	1100	W/OBD, FRAME 23 CEILING
D2 – 4	KRUEGER	18X18	2–WAY	1100	W/OBD, FRAME 23 CEILING
D3 – 1	KRUEGER	10X10	3–WAY	1100	W/OBD, FRAME 22
D3 – 2	KRUEGER	12X12	3–WAY	1100	W/OBD, FRAME 23 CEILING
D3 – 3	KRUEGER	15X15	3–WAY	1100	W/OBD, FRAME 23 CEILING
D3 – 4	KRUEGER	12X12	3–WAY	C1100	W/OBD, FRAME 22
D3 – 5	KRUEGER	15X15	3–WAY	C1100	W/OBD, FRAME 22
D4 – 1	KRUEGER	6X6	4–WAY	1100	W/OBD, FRAME 23 CEILING
D4 – 2	KRUEGER	10X10	4–WAY	1100	W/OBD, FRAME 23 CEILING
D4 – 3	KRUEGER	12X12	4–WAY	1100	W/OBD, FRAME 23 CEILING
D4 – 4	KRUEGER	15X15	4–WAY	1100	W/OBD, FRAME 23 CEILING
D4 – 5	KRUEGER	6X6	4–WAY	C1100	W/OBD, FRAME 22
D4 – 6	KRUEGER	12X12	4–WAY	C1100	W/OBD, FRAME 22
D4 – 7	KRUEGER	15X15	4–WAY	C1100	W/OBD, FRAME 22
D4 – 8	KRUEGER	18X18	4–WAY	C1100	W/OBD, FRAME 22
D4 – 9*	KRUEGER	15X15	4–WAY	1100	W/OBD, FRAME 23 CEILING
D4 – 10	KRUEGER	18X18	4–WAY	1100	W/OBD, FRAME 23 CEILING

* DIFFUSER FRAME SIZE 30"x30"
PROVIDE ROUND TO SQUARE COLLAR AS REQUIRED.

SC–02

COMPUTER ROOM UNIT

SYMBOL	MFR CATALOG NO	SERVICE	FAN SECTION							*REMOTE DRY COOLER				PUMP		
			CFM	HP	TOTAL CAP BTUH @72~FDB 50% RH	VOLTS	Ø	EXT SP IN H 0	FLA	FANS	HP	Ø	FLA	#	Ø	FLA
AC–1(1)*	LIEBERT MMC060 W/1436 REMOTE CONDENSER	AV STUDIO	2350	1	54,500	208	3	0 5	---	1	3/4	3	5	1	3/4	6

* TWO INDOOR UNITS TWO REMOTE UNITS
* DSO–092 (2 TOTAL)

SC–62

LOUVER SCHEDULE

SYMBOL	MANUFACTURER	SIZE (IN)	MODEL	LOCATION	REMARKS
L – 1	AIROLITE	120x120	K6776	4TH LEVEL	1/2" BIRD SCREEN
L – 2*	AIROLITE	84X18	K8406	4TH LEVEL SKYLIGHT	1/2" BIRD SCREEN
L – 3*	AIROLITE	84X18	K6776	2ND LEVEL EXHAUST	1/2" BIRD SCREEN
L – 4	AIROLITE	96X120	K666	4TH LEVEL	COLOR AS PER ARCHITECT
L – 5	" "	24 x 18"	K6776	ELEV	1/2" Bird screen/w/louver

* FIELD VERIFY EXACT SIZE

0000AQM13
Utah Valley Community College, Learning Resource Center - RV 90-014
Mechancial and Plumbing Schedules - 7256

AS BUILTS

REGISTERED PROFESSIONAL ENGINEER No. 3078 JAMES HOWARD VOM BAUMBACH State of Utah

1389ASC1 2–6–91

UTAH VALLEY COMMUNITY COLLEGE LEARNING RESOURCE CENTER/LIBRARY ADDITION

STRUCTURAL ENGINEER : Bsumek Mu and Associates
MECHANICAL ENGINEER : VanBoerum and Frank
ELECTRICAL ENGINEER : Becherer Nielson and Associates
LANDSCAPE ARCHITECT : MGB and Associates
INTERIOR DESIGNER : Don Harward

DRAWN BY: _____
CHECKED BY: _____

Scott, Louie and Browning
architects, engineers, planners
4766 Holladay Boulevard Salt Lake City Utah 84117

Utah Valley Community College
Learning Resource Center/Library Addition

Orem, Utah DFCM Project No. RV:90-014

MIP–15
Feb. 18, 1991

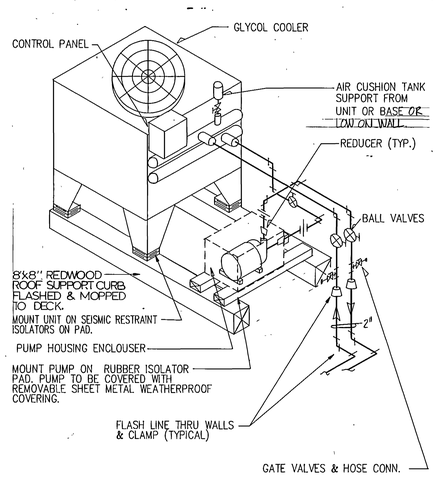

GLYCOL DRY COOLER DETAIL (18 / MP-14)
NO SCALE

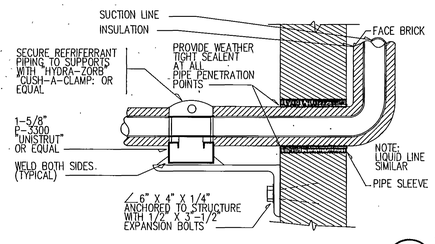

REFRIGERENT PIPE SUPPORT & PENETRATION AT WALL DETAIL (14 / MP-14)
NO SCALE

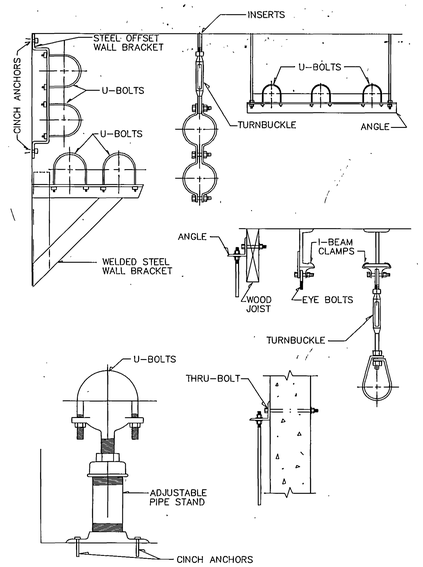

TYPICAL PIPE SUPPORT DETAIL (10 / MP-14)
NO SCALE

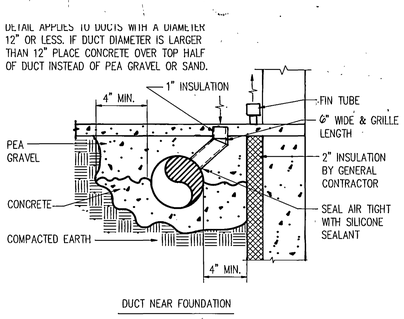

UNDERFLOOR DUCT DETAILS (6 / MP-14)
NO SCALE

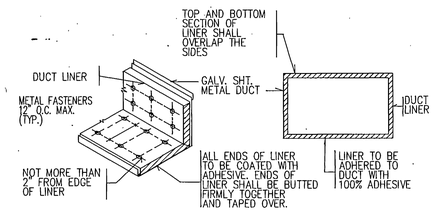

DUCT LINER DETAIL (1 / MP-14)
NO SCALE

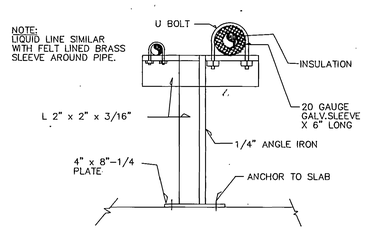

EXTERIOR REFRIGERANT PIPE SUPPORT (15 / MP-14)
NO SCALE

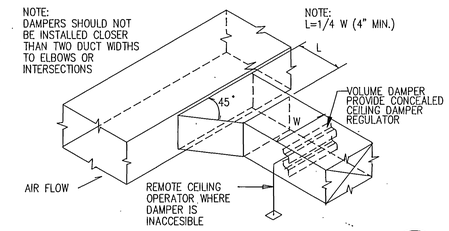

BRANCH DUCT TAKE-OFF & DAMPER DETAIL (2 / MP-14)
NO SCALE

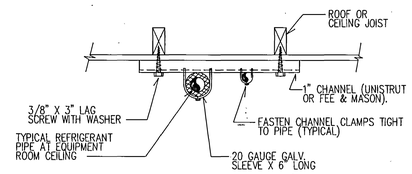

REFRIGERANT PIPE SUPPORT AT CEILING (16 / MP-14)
NO SCALE

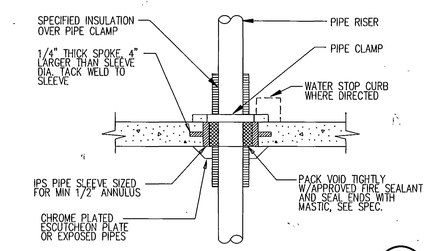

PIPE THROUGH FLOOR SLAB DETAIL (11 / MP-14)
NO SCALE

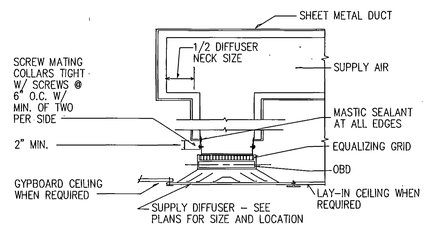

TYPICAL CEILING DIFFUSER DETAIL (7 / MP-14)
NO SCALE

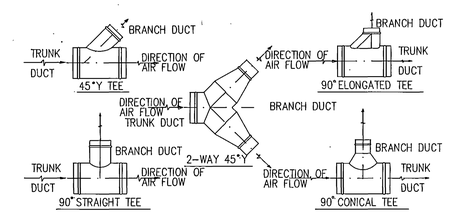

ROUND DUCT BRANCH TAKE-OFF DETAILS (3 / MP-14)
NO SCALE

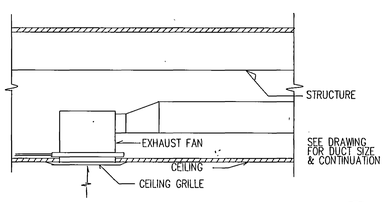

CEILING EXHAUST FAN DETAIL (17 / MP-14)
NO SCALE

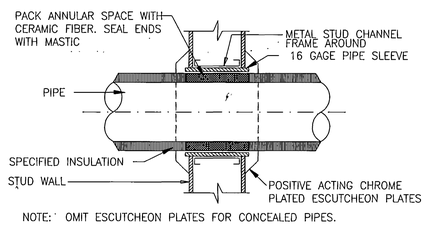

PIPE THROUGH STUD WALL DETAIL (12 / MP-14)
NO SCALE

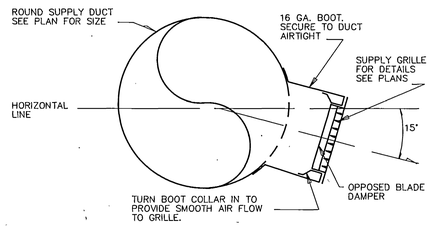

SUPPLY GRILLE DETAIL (8 / MP-14)
NO SCALE

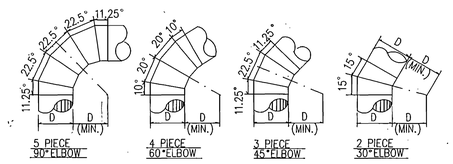

ROUND DUCT ELBOW DETAILS (4 / MP-14)
NO SCALE

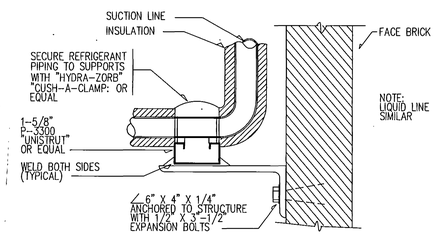

REFRIGERENT PIPE SUPPORT AT WALL (13 / MP-14)
NO SCALE

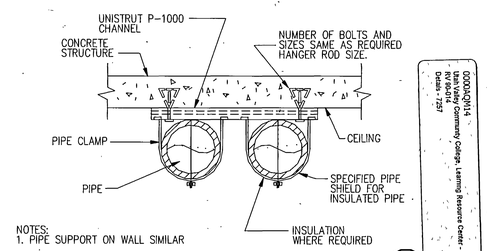

PIPE SUPPORT ON CEILING (9 / MP-14)
NO SCALE

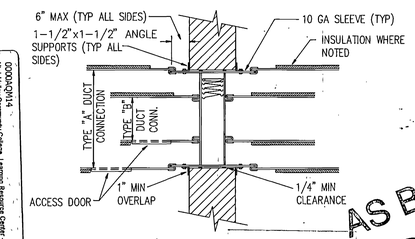

WALL MOUNTED FIRE DAMPER DETAIL (5 / MP-14)
NO SCALE

AS BUILTS

00004QN14
Utah Valley Community College - Learning Resource Center - Orem - 7257

13890E01

UTAH VALLEY COMMUNITY COLLEGE LEARNING RESOURCE CENTER/LIBRARY ADDITION

STRUCTURAL ENGINEER	Baumek Hu and Associates	
MECHANICAL ENGINEER	Vanbeverum and Frank	
ELECTRICAL ENGINEER	Bechtel Nelson and Associates	
LANDSCAPE ARCHITECT	MGB and Associates	DRAWN BY:
INTERIOR DESIGNER	Don Harward	CHECKED BY:

Scott, Louie and Browning
Architects/Engineers/Planners
3141 Highway Boulevard, Salt Lake City, Utah 84119

Utah Valley Community College
Learning Resource Center/Library Addition
Orem, Utah - DFCM Project No. RV-90-014

MP-14
Feb. 16, 1991

EQUIPMENT ANCHORAGE TO CONCRETE FLOOR LIST

EQUIPMENT WEIGHT PER ANCHOR BOLT	MINIMUM ANCHOR DIAMETER (INCHES)	MINIMUM DEPTH OF EMBEDMENT (INCHES)	ICBO ALLOWABLE SHEAR PER BOLT (LBF)	ICBO ALLOWABLE TENSION PER BOLT (LBF)
UP TO 150#	1/4"	1-1/2"	380	215
300#	3/8"	2-1/2"	860	355
600#	1/2"	3"	1710	665
900#	5/8"	4-1/2"	2500	855
1300#	3/4"	6"	3050	1585
2000#	1"	6"	6280	2020

1 THE SIZES AND EMBEDMENT ARE FOR ANCHORS INSTALLED IN STONE AGGREGATE CONCRETE HAVING A FC = 2000 PSI ULTIMATE COMPRESSIVE STRENGTH AT THE TIME OF INSTALLATION. ALL BOLTS ARE TO BE INSTALLED PER MANUFACTURER INSTRUCTIONS AND TO BE INSTALLED NO CLOSER THAN 12 DIAMETERS ON CENTER AND WITH A MINIMUM EDGE DISTANCE OF 6 DIAMETERS.
2 EACH EQUIPMENT SUPPORT LEG WILL BE ANCHORED AND ALL EQUIPMENT WILL BE ANCHORED AT ALL CORNERS. A MINIMUM OF TWO ANCHORS WILL BE REQUIRED FOR ALL EQUIPMENT.
3 EQUIPMENT WEIGHT PER ANCHOR IS THE TOTAL OPERATING OF EQUIPMENT PLUS BASES AND SUPPORTS DIVIDED BY THE NUMBER OF ANCHORS.
4 ANCHORAGE IS TO PREVENT HORIZONTAL MOVEMENT, IF EQUIPMENT GEOMETRY IS SUCH THAT THE VERTICAL DISTANCE FROM SUPPORT LEG TO CENTER OF GRAVITY IS GREATER THAN FOUR TIMES THE SHORTEST DISTANCE FROM A SUPPORT LEG TO THE CENTER OF GRAVITY, ADDITIONAL ANCHORAGE AND RESTRAINTS WILL BE REQUIRED TO PREVENT OVERTURNING.

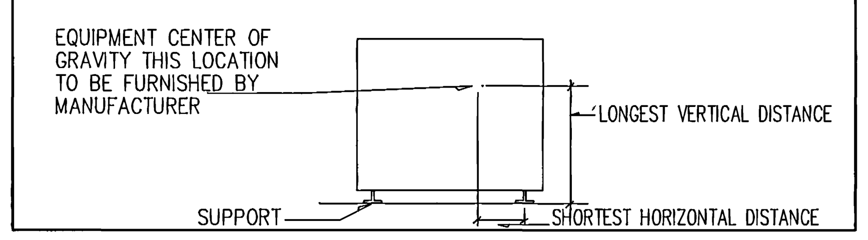

1 DETAILS SHOWN PROVIDE GENERAL GUIDELINES FOR A LATERAL BRACING SYSTEM. A TYPICAL VERTICAL SUPPORT SYSTEM MUST ALSO BE USED.
2 BRACE ALL PIPES 1-1/2" I.D. AND LARGER.
3 CABLE RESTRAINTS AND BRACING NOT TO EXCEED 30'-0" CENTERS AND SHALL BE PROVIDED AT ALL CHANGES IN DIRECTION OF PIPE. ALL DROPS TO EQUIPMENT, AND ON EACH SIDE OF FLEXIBLE CONNECTIONS. BRACE POINTS SHALL NOT EXCEED 15'-0" FROM FLEXIBLE CONNECTION.
4 ALL HOLES IN ANGLES ARE TO BE 1/16 INCH OVERSIZED. PLACE STANDARD CUT WASHERS BETWEEN SHEET METAL ANGLES AND NUT.
5 EQUIPMENT WHICH ATTACHES TO THE PIPING SYSTEM SHALL BE BRACED INDEPENDENTLY OF THE PIPES.
6 ALL SHEET METAL FOR BRACING TO BE FY=33 KSI MINIMUM. GAUGE FOR SHEET METAL BRACING SHALL BE AS FOLLOWS:

16 GA = (0.0598 INCH)
14 GA = (0.0747 INCH)
12 GA = (0.1046 INCH)

7 MINIMUM DISTANCE FROM EDGE OF ANGLE TO BOLTS SHALL BE AS FOLLOWS:

BOLT DIAMETER	DISTANCE FROM EDGE
1/4" TO 1/2"	1"
5/8"	1 1/8"
3/4"	1 1/4"
7/8"	1 1/2"

8 DO NOT FASTEN RESTRAINT SYSTEM TO TWO DISSIMILAR PARTS OF A BUILDING THAT MAY RESPOND IN A DIFFERENT MODE DURING AN EARTHQUAKE. FOR EXAMPLE, A WALL AND A ROOF.
9 PROVIDE LARGE ENOUGH PIPE SLEEVES THROUGH WALLS OR FLOORS TO ALLOW FOR ANTICIPATED DIFFERENTIAL MOVEMENTS.
10 DO NOT FASTEN ONE RIGID PIPING SYSTEM TO TWO DISSIMILAR PARTS OF A BUILDING THAT MAY RESPOND IN A DIFFERENT MODE DURING AN EARTHQUAKE. FOR EXAMPLE, A WALL AND A ROOF.
11 BRACING DETAILS, SCHEDULE AND NOTES ARE TO BE USED WITH THE FOLLOWING TYPES OF PIPE: STEEL PIPE SCHEDULE 40 AND 80, COPPER PIPE TYPE K,L,M (ONLY SILVER SOLDERED BRAZED JOINTS TO BE USED WITH COPPER PIPE).
12 FOR GAS PIPING, THE BRACING DETAILS, SCHEDULES AND NOTES MAY BE USED EXCEPT THAT RESTRAINTS SHALL BE INSTALLED AT EVERY 20'-0" O.C. ALSO ALL PIPE 1 INCH AND LARGER SHALL BE BRACED.
13 WASTE, VENT AND ROOF DRAINAGE PIPING SYSTEMS ARE EXCLUDED FROM THE RESTRAINT GUIDELINES.
14 ALTERNATE EVERY OTHER CABLE RESTRAINT IN OPPOSITE DIRECTION (SHOWN DOTTED).

DUCT CABLE BRACING LIST

DUCT SIZE (MAX.)	*WT/ LIN FT (MAX)	BOLT SIZE	HORIZONTAL ANGLE	VERTICAL ANGLE	CABLE DIA.**	CABLE DES.	ANCHOR CONN. TYPE
12"	5#	3/8"	2 X 2 X 16 GA	2 X 2 X 12 GA	1/8"	7x19 GALV	I
18"	8#	3/8"	2 X 2 X 16 GA	2-1/2 X 2-1/2 X 12 GA	1/8"	7x19 GALV	I
24"	10#	3/8"	2 X 2 X 16 GA	2-1/2 X 2-1/2 X 12 GA	1/8"	7x19 GALV	I
30"	13#	3/8"	2 X 2 X 16 GA	2-1/2 X 2-1/2 X 12 GA	1/8"	7x19 GALV	I
42"	20#	3/8"	2-1/2 X 2-1/2 X 16 GA	4 X 4 X 12 GA	3/16"	7x19 GALV	II
54"	27#	3/8"	2-1/2 X 2-1/2 X 16 GA	4 X 4 X 12 GA	3/16"	7x19 GALV	II
60"	36#	3/8"	3 X 3 X 16 GA	4 X 4 X 12 GA	3/16"	7x19 GALV	II
84"	53#	3/8"	4 X 4 X 14 GA	4 X 4 X 1/4	1/4"	7x19 GALV	III
96"	80#	1/2"	4 X 4 X 12 GA	5 X 3 X 1/4	5/16"	7x19 GALV	IV

* MAXIMUM WEIGHT OF DUCTS OR COMBINATIONS OF DUCTS PER LINEAR FOOT. THE DUCTS MAXIMUM DIMENSION SHALL GOVERN WHAT BRACING IS REQUIRED. FOR ANCHOR CONNECTIONS SEE LIST. SEE DUCT BRACING DETAILS.

** TWO CABLES REQUIRED AT EACH RESTRAINT POINT, EACH CABLE TO BE INSTALLED 45~ TO HORIZONTAL AND 45~ TO LONGITUDINAL DIRECTION OF DUCT.

SCHEDULE FOR TYPICAL CONNECTIONS TO STRUCTURAL SUPPORTING MEMBERS

TYPE	MAX. LOAD CAPACITY POUNDS	PHILLIP'S REDHEAD ANCHORS TO CONC. LT. WT.	PHILLIP'S REDHEAD ANCHORS TO CONC. HARD ROCK	CONC. CAST-IN PLACE INSERT	BOLT OF STL.BM. CLAMP
I	500	3/8"	3/8"	3/8"	3/8"
II	1000	3/8"	3/8"	1/2"	3/8"
III	1500	3/8"	3/8"	1/2"	3/8"
IV	2000	1/2"	1/2"	5/8"	1/2"
V	3000	2-1/2"	2-1/2"	2-1/2"	5/8"
VI	4000	2-5/8"	2-5/8"	2-5/8"	5/8"

TYPE	SPREADER SIZE	BOLT THRU WOOD	SPAN-CRETE ROD	ANGLE TO SUPPORTING STRUCTURAL MEMBER	ROD SIZE FOR PIPES
I	C4X5.4	1/2"	3/8"	3X2X1/4"X0'-3" LLH	1/2"
II	C5X6.7	3/4"	3/8"	3-1/2X2-1/2X5/16X0'-3" LLH	1/2"
III	C6X8.5	***	1/2"	3-1/2X2-1/2X7/16X0'-4" LLH	5/8"
IV	C8X11.5	***	1/2"	5X3X1/2X0'-4" LLH	3/4"
V	C9X13.4	***		2-3-1/2X2-1/2X7/16X0'-4"	7/8" *
VI	C10X15.3			2-5X3X1/2X0'-4"	7/8" **

NOTES:

1 FOR SLABS LESS THAN 5" THICK ONLY, THIN SLAB INSERTS MAY BE USED.

*2 FOR USE W/CONC. CAST-IN PLACE INSERTS OR PHILLIPS REDHEAD IN HARD ROCK ONLY.

**3 FOR USE WITH CONC. CAST-IN PLACE INSERTS ONLY.

***4 WHERE TYPE III CONNECTIONS ARE REQUIRED FOR WOOD SYSTEMS, TYPE II CONNECTIONS SHALL BE USED WITH REDUCED RESTRAINT SPACING TO 20 FT. O.C. WHERE TYPE IV CONNECTIONS ARE REQUIRED FOR WOOD SYSTEMS, TYPE II CONNECTIONS SHALL BE USED WITH REDUCED RESTRAINT SPACING TO 15 FT. O.C. WHERE TYPE V CONNECTIONS ARE REQUIRED FOR WOOD SYSTEMS, TYPE II CONNECTIONS SHALL BE USED WITH REDUCED RESTRAINT SPACING TO 10 FT. O.C.

5 THE MECHANICAL CONTRACTOR SHALL SUBMIT SHOP DRAWINGS TO THE STRUCTURAL ENGINEER AND THEN TO THE MECHANICAL ENGINEER, SHOWING CONNECTION TYPE AND LOCATION OF ALL RESTRAINT CONNECTIONS TO THE STRUCTURE.

6 FOR ESSENTIAL FACILITIES WHERE CONCRETE ANCHOR BOLTS OF THE "REDHEAD" EXPANSION TYPE ARE LOADED IN PULL OUT, 50 PERCENT OF THE BOLTS (ALTERNATE BOLTS IN ANY GROUP ARRANGEMENT) SHALL BE PROOF TESTED TO TWICE THE ALLOWABLE LOAD. IF THERE ARE FAILURES, THE IMMEDIATELY ADJACENT BOLTS MUST THEN ALSO BE TESTED.

& "HILTI" AND "RAMSET" ANCHORS ARE EQUAL SUBSTITUTES FOR "REDHEAD".

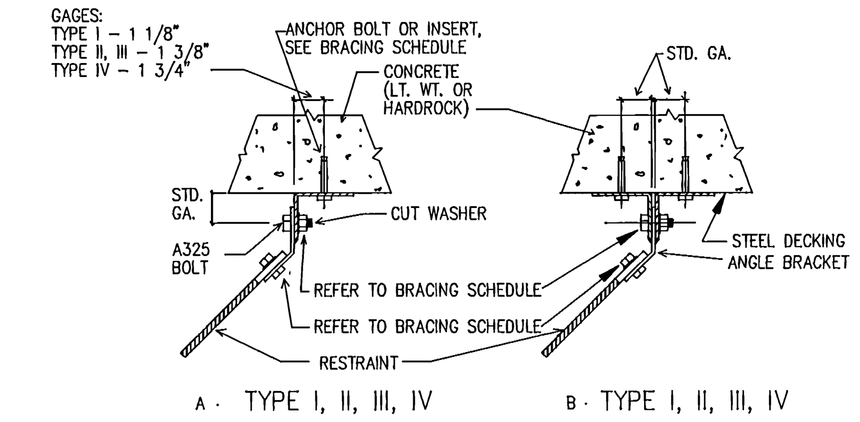

RESTRAINT CONNECTIONS TO CONCRETE

NO SCALE

1 MP-15

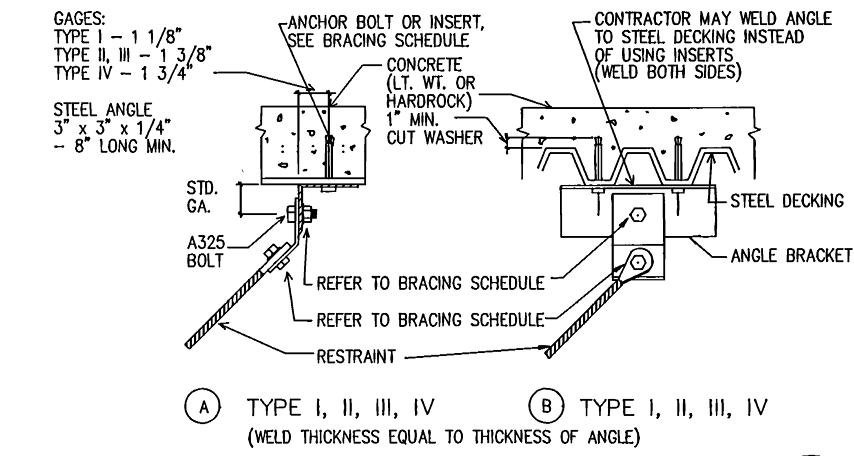

RESTRAINT CONNECTIONS TO STEEL

NO SCALE

2 MP-15

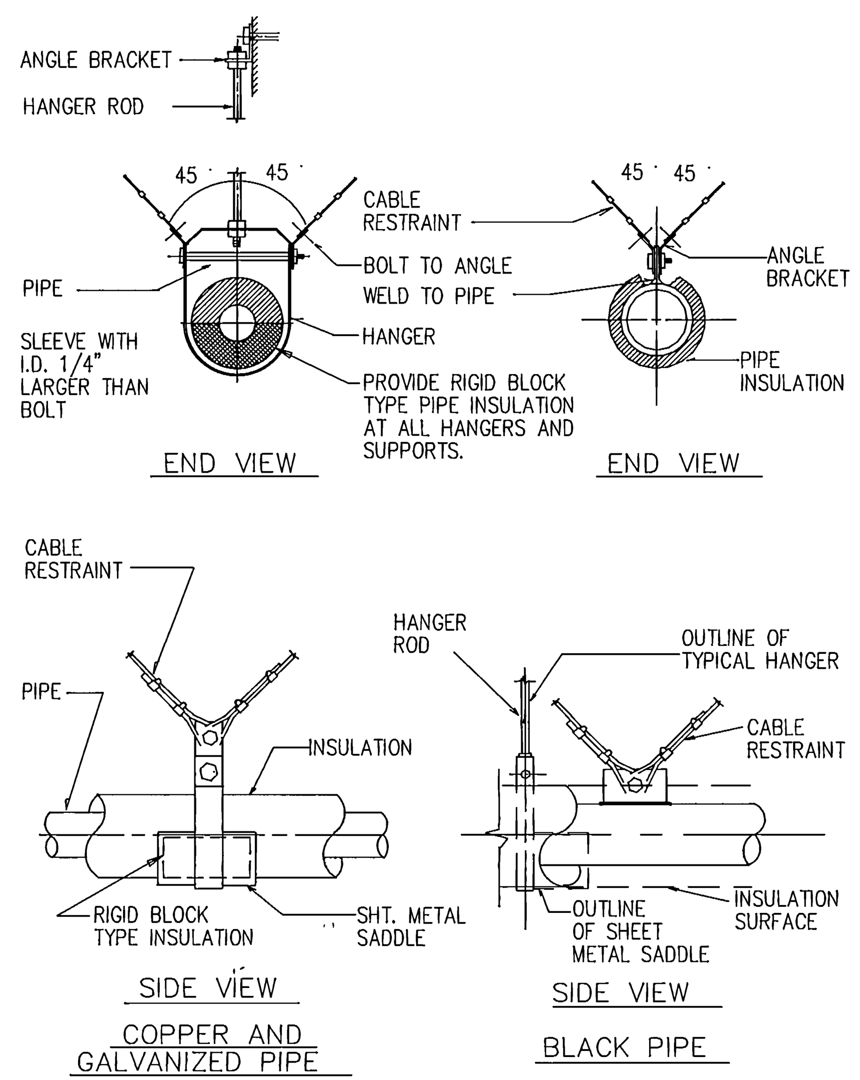

PIPING RESTRAINT DETAIL

NO SCALE

7 MP-15

PIPE SIZE	HANGER ROD SIZE	MAX. ROD LENGTH	HANGER TYPE	BOLTS TO ANGLE	ANGLE CLIP	ANGLE BRACE	ANCHOR CONN. TYPE	ANCHOR BOLT OR INSERT
1-1/2"	1/2"	25"	CLEVIS	3/8"	3x3x1/4	2x2x16GA	I	3/8"
2"	1/2"	25"	CLEVIS	3/8"	3x3x1/4	2x2x16GA	I	3/8"
2-1/2"	5/8"	31"	CLEVIS	3/8"	3x3x1/4	2x2x16GA	I	3/8"
3"	5/8"	31"	CLEVIS	3/8"	3x3x1/4	2-1/2x2-1/2x 16 GA	II	1/2"
3-1/2"	5/8"	31"	CLEVIS	3/8"	3x3x1/4	2-1/2x2-1/2x 16 GA	II	1/2"
4"	3/4"	37"	CLEVIS	3/8"	3x3x1/4	2-1/2x2-1/2x 16 GA	II	1/2"
5"	3/4"	37"	CLEVIS	1/2"	5x3x1/2	2-1/2x2-1/2x 16 GA	III	3/4"
6"	3/4"	37"	CLEVIS	5/8"	5x3x1/2	2-1/2x2-1/2x 16 GA	IV	3/4"
8"	7/8"	43"	CLEVIS	5/8"	2-5x3x1/2	3x3x12 GA	V	2-5/8"
10"	7/8"	43"	CLEVIS	3/4"	2-5x3x1/2	3x3x12 GA	VI	2-5/8"

FOR ANCHOR CONNECTIONS SEE LIST.

SEE PIPE BRACING DETAIL

*1-5/8"x1-5/8"x12 GA CHANNEL MAY BE USED

1 DETAILS SHOWN PROVIDE GENERAL GUIDELINES FOR A LATERAL BRACING SYSTEM. A TYPICAL VERTICAL SUPPORT SYSTEM MUST ALSO BE USED.

2 BRACE ALL RECTANGULAR DUCTS OF AREA 6 SQ. FT. AND LARGER. BRACE ALL ROUND DUCTS 28" IN DIAMETER AND LARGER.

3 CABLE RESTRAINTS AND BRACING NOT TO EXCEED 30'-0" CENTERS AND SHALL BE PROVIDED AT EACH TURN, AT THE END OF EACH DUCT RUN, AND ON EACH SIDE OF FLEXIBLE CONNECTIONS. BRACE POINTS SHALL NOT EXCEED 15'-0" FROM FLEXIBLE CONNECTION.

4 WHEN COMBINING DUCT GROUPS ON COMMON BRACING SYSTEMS, USE WEIGHTS AND DIMENSIONS FROM BRACING LIST.

5 ALL HOLES IN ANGLES ARE TO BE 1/16 INCH OVERSIZED. PLACE STANDARD CUT WASHERS BETWEEN SHEET METAL ANGLES AND NUT.

6 DUCTS NOT BRACED SHALL BE INSTALLED WITH A 6" MIN. CLEARANCE TO VERTICAL CEILING HANGER WIRES.

7 REHEAT BOXES AND OTHER ITEMS WHICH ATTACH TO THE DUCT SYSTEM SHALL BE BRACED INDEPENDENTLY OF THE DUCTS.

8 ALL SHEET METAL FOR BRACING TO BE FY = 33 KSI MINIMUM. GAUGE FOR SHEET METAL BRACING SHALL BE AS FOLLOWS:

16 GA = (0.0598 INCH)
14 GA = (0.0747 INCH)
12 GA = (0.1046 INCH)

9 MINIMUM DISTANCE FROM EDGE OF ANGLE TO BOLTS SHALL BE AS FOLLOWS:

BOLT DIAMETER	DISTANCE FROM EDGE
1/4" TO 1/2"	1"
5/8"	1 1/8"
3/4"	1 1/4"
7/8"	1 1/2"

10 DO NOT FASTEN RESTRAINT SYSTEM TO TWO DISSIMILAR PARTS OF A BUILDING THAT MAY RESPOND IN A DIFFERENT MODE DURING AN EARTHQUAKE. FOR EXAMPLE, A WALL AND A ROOF.

11 ALTERNATE EVERY OTHER CABLE RESTRAINT IN OPPOSITE DIRECTION (SHOWN DOTTED).

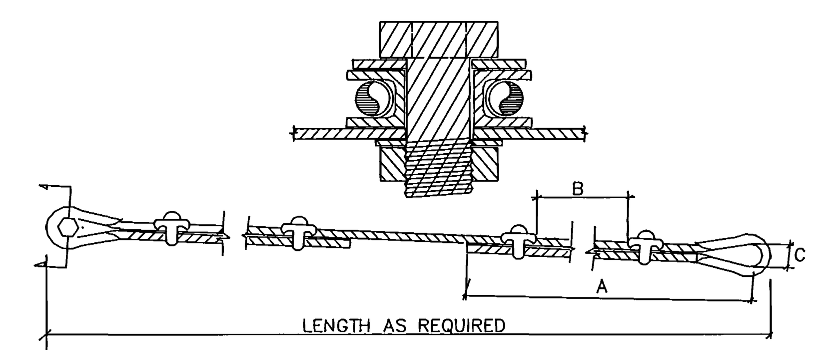

NOTES:

1. CABLES, THIMBLES, CLIPS, GROMMETS & FLAT WASHERS ARE TO BE FURNISHED BY RESTRAINT MANUFACTURER. ALL OTHER HARDWARE TO BE PROVIDED BY CONTRACTOR.
2. ENTIRE SYSTEM TO BE EQUAL TO AMBER BOOTH.
3. CABLE CLIPS MUST BE ORIENTED AS SHOWN WITH SHORT END OF CABLE ON THE CURVED PART OF THE CLIP.

CABLE SCHEDULE

CABLE DIA.	CABLE DESIGN	A	B	C	BOLT SIZE	ALLOWABLE LOAD (lbf)	BREAKING STRENGTH (lbf)
1/8"	7X19 GALV.	5-1/4"	1-5/8"	5/8"	3/8"	660	2000
3/16"	7X19 GALV.	5-3/4"	1-7/8"	5/8"	3/8"	1400	4200
1/4"	7X19 GALV.	6-3/4"	2-3/8"	11/16"	3/8"	2330	7000
5/16"	7X19 GALV.	7-3/8"	2-5/8"	13/16"	5/8"	3260	9800
3/8"	7X19 GALV.	8-7/8"	3-1/4"	1"	5/8"	4800	14400
7/16"	6X19 IWRC	17"	3-5/8"	1"	5/8"	5920	17800
1/2"	6X19 IWRC	18"	3-7/8"	1-1/8"	3/4"	7660	23000

CABLE RESTRAINT DETAIL

NO SCALE

3 MP-15

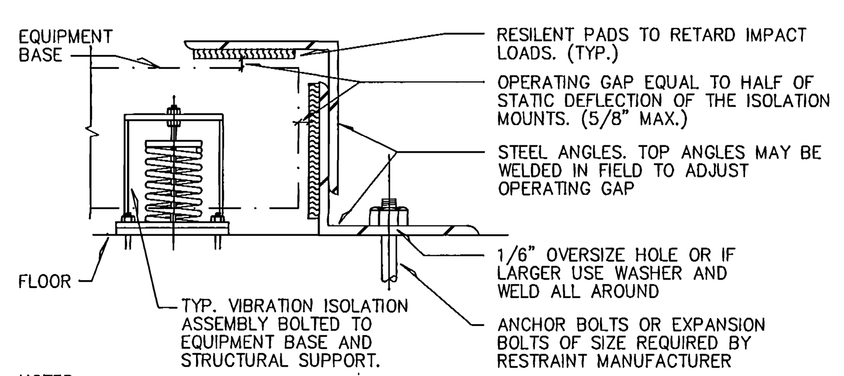

NOTES:
1 DESIGN RESTRAINT DEVICES (ANGLES AND BOLTS) TO WITHSTAND 1.0g LATERAL AND VERTICAL LOADS.
2 INSTALL LATERAL RESTRAINING DEVICES ON ALL SIDES OF EQUIPMENT BASE

SPRING ISOLATOR RESTRAINT DETAIL

NO SCALE

6 MP-15

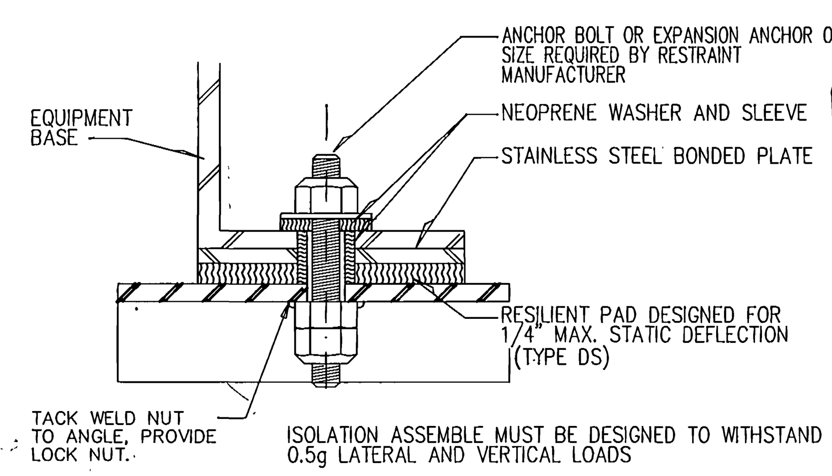

ISOLATION ASSEMBLE MUST BE DESIGNED TO WITHSTAND 0.5g LATERAL AND VERTICAL LOADS

RESILIENT PAD ISOLATOR RESTRAINT DETAIL

NO SCALE

5 MP-15

0000AQM15
Utah Valley Community College Learning Resource Center -
RV 90-014
Details - 7258

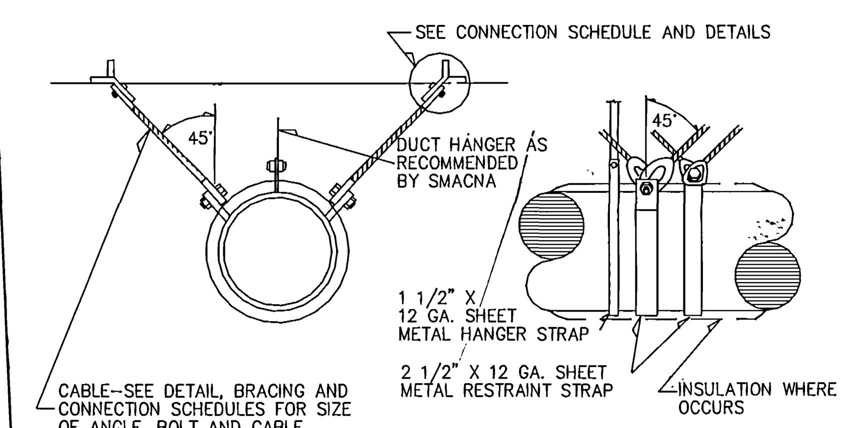

CABLE BRACING FOR ROUND AND OVAL DUCTS

NO SCALE

4 MP-15

AS BUILTS

REGISTERED PROFESSIONAL ENGINEER No. 3075 VAN BOERUM State of Utah

1389DE02

UTAH VALLEY COMMUNITY COLLEGE LEARNING RESOURCE CENTER/LIBRARY ADDITION

STRUCTURAL ENGINEER: Bsumek MJ and Associates
MECHANICAL ENGINEER: VanBoerum and Frank
ELECTRICAL ENGINEER: Becherer, Nielson and Associates
LANDSCAPE ARCHITECT: MGB and Associates
INTERIOR DESIGNER: Don Harward

DRAWN BY:
CHECKED BY:

MONSEN ENGINEERING CO. 108657

Scott, Louie and Browning
architects, engineers, planners
1750 Holladay Boulevard, Salt Lake City, Utah 84117

Utah Valley Community College
Learning Resource Center/Library Addition
Orem, Utah DFCM Project No. RV:90-014

MP-15

Feb. 18, 1991

ABBREVIATIONS

AC	ALTERNATING CURRENT
A.F.F.	ABOVE FINISH FLOOR
AIC	AMPS INTERRUPTING CAPACITY
AM	AMP METER
AMP	AMPERE
ANN	ANNUNCIATOR
ATS	AUTOMATIC TRANSFER SWITCH
AUX	AUXILIARY
AWG	AMERICAN WIRE GAUGE
BC	BARE COPPER
BFG	BELOW FINISHED GRADE
C	CONDUIT
CAB	CABINET
CATV	COMMUNITY ANTENNA TELEVISION
CCTV	CLOSED CIRCUIT TELEVISION
CKT	CIRCUIT
CLG	CEILING
CNTR	CONTRACTOR
C.O.	CONDUIT ONLY
CRT	COMPUTER TERMINAL (CATHODE RAY TUBE)
CT	CURRENT TRANSFORMER
C/W	COMPLETE WITH
DB	DECIBEL
DC	DIRECT CURRENT
DWG	DRAWING
EG	EMERGENCY GENERATOR
EMT	ELECTRICAL METALIC TUBING
EX	EXPLOSION PROOF
FACP	FIRE ALARM CONTROL PANEL
FLA	FULL LOAD AMPS
FLR	FLOOR
FS	FUSED SWITCH
FSCP	FIRE & SECURITY CONTROL PANEL
FT	FOOT
GND	GROUND
GRC	GALVANIZED RIGID CONDUIT
HP	HORSE POWER
HZ	HERTZ
IMT	INTERMEDITAE METALIC CONDUIT
ISO	ISLOATED GROUND
J-BOX	JUNCTION BOX
KV	KILOVOLT
KVA	KILOVOLT AMPERES
KVAR	KILOVARS
KW	KILOWATT
LRA	LOCKED ROTOR AMPS
LTG	LIGHTING
MNF	MANUFACTURER
MATV	MASTER ANTENNA TELEVISION
MAX	MAXIMUM
MB	MAIN BUS
MCC	MOTOR CONTROL CENTER
MCM	1000 CIRCULAR MILLS
MH	MANHOLE
MIC	MICROPHONE
MIN	MINIMUM
MNF	MANUFACTURER
MTG	MOUNTING
MTR	MOTOR
N/A	NOT APPLICABLE
NEC	NATIONAL ELECTRICAL CODE
NEMA	NATIONAL ELECTRICAL MANUFAC. ASSOC.
NFC	NATIONAL ELECTRICAL CODE
NFPA	NATIONAL FIRE PROTECTION ASSOC.
N.I.C.	NOT IN CONTRACT
NTS	NOT TO SCALE
OS & Y	OUTSIDE SCREW & YOKE (FIRE SPRINKLER RISER)
PB	PUSHBUTTON
PF	POWER FACTOR
PFR	PHASE FAILURE RELAY
PNL	PANEL
PT	POTENTIAL TRANSFORMER
PVC	POLYVINYL CHLORIDE CONDUIT
RECEP	RECEPTACLE
REQ	REQUIREMENT
RLA	RATED LOAD AMPS
SE	SERVICE ENTRANCE
SPEC	SPECIFICATIONS
SPKR	SPEAKER
SS.	SELECTOR SWITCH
SW	SWITCH
SWBD	SWITCHBOARD
SWGR	SWITCHGEAR
TTB	TELEPHONE TERMINAL BOARD
TV	TELEVISION
TYP	TYPICAL
UP&L	UTAH POWER & LIGHT
V	VOLT (KV-KILOVOLT)
VAR	VOLT-AMPS/REACTIVE
VM	VOLT METER
W	WATTS
W/	WITH
WH	WATTHOUR METER
W/O	WITHOUT
WP	WEATHERPROOF
XFER SW	TRANSFER SWITCH
XFMR	TRANSFORMER
1P	SINGLE-POLE
2P	TWO-POLE
3P	THREE-POLE
4P	FOUR-POLE
Ø	PHASE

DEMOLITION NOTES

1. COORDINATE ALL NEW ELECTRICAL EQUIPMENT REQUIREMENTS AND MAKE CONNECTION TO EXISTING SYSTEMS. THIS INCLUDES LIGHTING, POWER, SIGNAL, RACEWAY, AND OTHER SYSTEMS INCLUDED UNDER DIVISION 16.
2. RELOCATE, REWIRE, AND/OR RECONNECT EXISTING ELECTRICAL DEVICES AND/OR EQUIPMENT THAT FOR ANY REASON OBSTRUCTS CONSTRUCTION.
3. CONCEAL ALL RACEWAY AND WIRING IN EXISTING WALLS, CEILINGS, FLOORS, ETC. EXCEPT WHERE THE USE OF SURFACE METAL RACEWAYS (E.G. WIREMOLD) IS INDICATED ON DRAWINGS OR IN SPEC.
4. LEAVE ALL EXISTING EQUIPMENT, IN PORTIONS OF THE BUILDING NOT BEING REMODELLED, IN WORKING CONDITION. RESTORE ALL INTERRUPTED BRANCH CIRCUITS, FEEDERS, ETC. TO WORKING CONDITION.
5. EXISTING RACEWAYS MAY BE REUSED (IN PLACE) WHERE POSSIBLE, AND WHERE IN COMPLIANCE WITH THE SPECIFICATIONS AND THE INTENT OF THE CONTRACT DOCUMENTS. INSURE INTEGRITY OF EXISTING RACEWAY BEFORE RE-USE.
6. REMOVE ALL RACEWAYS, CONDUCTORS, BOXES, DEVICES, EQUIPMENT, ETC. THAT ARE NOT TO BE RE-USED. TERMINATE AT ACCESSIBLE JUNCTION BOX BY PROVIDING PROPER KNOCK-OUT CLOSURE, TAPE CONDUCTORS, AND LABEL AS "SPARE" WITH CIRCUIT NO., ZONE NO., OR OTHER CHARACTERISTIC IDENTIFYING SOURCE.
7. REMOVE EXISTING LIGHT FIXTURES WHICH ARE NOT TO BE REUSED, PLACE IN CARTON, LABEL APPROPRIATELY, AND RETURN TO OWNER.
8. DO NOT PENETRATE STRUCTURAL ELEMENTS OF FLOORS, WALLS, CEILINGS, ROOFS, ETC.
9. DISCONNECT AND RECONNECT ANY/ALL FIXTURES, DEVICES, EQUIPMENT, ETC. REQUIRED FOR PROPER COMPLETION OF THE WORK.
10. INSTALL NEW CONDUCTORS FROM BRANCH PANELS TO EACH EXISTING WIRING DEVICES, AND LIGHTING FIXTURE.

GENERAL NOTES

1. CONSULT ARCHITECTURAL REFLECTED CEILING PLANS FOR EXACT LOCATION AND QUANTITY OF ALL LIGHTING FIXTURES.
2. VERIFY ALL EQUIPMENT DIMENSIONS AND LOCATIONS BEFORE BEGINNING ROUGH-IN. CONSULT ALL APPLICABLE CONTRACT DRAWINGS AND SHOP DRAWINGS TO INSURE NEC CODE CLEARANCES REQUIRED AROUND ALL ELECTRICAL EQUIPMENT.
3. CONTRACTOR SHALL VERIFY ALL ELECTRICAL LOADS (VOLTAGE, PHASE, CONNECTION REQUIREMENTS, ETC.) OF EQUIPMENT FURNISHED UNDER DIVISION 15 WITH APPROVED MECHANICAL SHOP DRAWINGS BEFORE BEGINNING ROUGH-IN.
4. SEE SECTION 16510 OF THE SPECIFICATION FOR REQUIRED COORDINATION MEETINGS WITH MECHANICAL AND CEILING CONTRACTORS.
5. SEE APPLICABLE SHOP DRAWINGS FOR ROUGH-IN LOCATION OF ALL EQUIPMENT, WIRING DEVICES, ETC. WHERE APPLICABLE MOUNT ALL WIRING DEVICES ABOVE BACKSPLASH EXCEPT THOSE SERVING UNDER COUNTER EQUIPMENT.
6. SEE SPECIFICATION FOR ENERGY SAVING LAMP AND BALLAST REQUIREMENTS.
7. FINISHES OF ALL LIGHT FIXTURES SHALL BE SELECTED BY ARCHITECT.
8. THE ELECTRICAL CONTRACTOR SHALL NOTIFY AND COOPERATE WITH THE MECHANICAL CONTRACTOR SUCH THAT NO PIPING, DUCTS, OR EQUIPMENT FOREIGN TO THE OPERATION OF THE ELECTRICAL EQUIPMENT SHALL BE PERMITTED TO BE INSTALLED IN, ENTER OR PASS THRU ELECTRICAL ROOMS OR SPACES; OR ABOVE OR BELOW ELECTRICAL EQUIPMENT IN OTHER AREAS.
9. ELECTRICAL BOXES SHALL NOT BE LOCATED IN MASONRY COLUMNS IN BRICK WALLS OR IN GROUTED CELLS ADJACENT TO OPENINGS. COORDINATE LOCATION OF BOXES WITH MASONRY CONTRACTOR.
10. ALL PENETRATIONS OF FIRE RATED FLOORS, WALLS, AND CEILINGS SHALL BE SEALED WITH APPROVED MATERIAL TO MAINTAIN FIRE RATING OF SURFACE PENETRATED.

ELECTRICAL SYMBOL SCHEDULE

1. SEE FIXTURE SCHEDULE FOR TYPE, MOUNTING AND WATTAGE.
2. WIRED FROM ADJACENT OUTLET BOX.
3. REFER TO DRAWINGS FOR DIRECTIONAL ARROWS.
4. SUBSCRIPT KEYS SWITCH TO FIXTURES CONTROLLED.
5. NEMA TYPE 'ND' NON-FUSED UNLESS NOTED 'F' (FUSED). USE 'HD' 480 V.
6. SEE SPECS FOR SIZE AND/OR TYPE.
7. PROVIDE H.O.A. AND S.S. PUSHBOTTONS AS REQUIRED.
8. DOUBLE ARROWS DENOTE A DOUBLE FACE UNIT.
9. COORDINATE WITH SHOP DRAWINGS.
10. SUBSCRIPT DENOTES NEMA CONFIGURATION.

STANDARD MOUNTING HEIGHT UNLESS OTHERWISE NOTED ON PLANS

SYMBOL	DESCRIPTION	MOUNTING HEIGHT	NOTES
	ONE CICUIT, TWO WIRE HOME RUN TO PANEL		
	2 CIRCUIT, 3 WIRE, COMMON NEUTRAL HOME RUN		
	3 CIRCUIT, 4 WIRE, COMMON NEUTRAL HOME RUN		
	CONDUIT RUN CONCEALED IN WALL OR CEILING		
	CONDUIT RUN CONCEALED IN FLOOR OR GROUND		
	CONDUIT UP		
	CONDUIT DOWN		
	CEILING LIGHT OUTLET	CEILING	1.
	WALL LIGHT OUTLET	AS NOTED	1.
	RECESSED INCANDESCENT OR H.I.D. FIXTURE	CEILING	1.2.
	FLUORESCENT LIGHT FIXTURE	AS NOTED	1
	FLUORESCENT EGRESS LIGHT FIXTURE	AS NOTED	UNSWITCHED
	CEILING MOUNTED EXIT LIGHT	CEILING	1.3.8.
	WALL MOUNTED EXIT LIGHT	AS NOTED	1.3.8.
$	SINGLE POLE SWITCH	+4'-0"	
$a	SINGLE POLE SWITCH	+4'-0"	4.
$3	THREE-WAY SWITCH	+4'-0"	
$4	FOUR-WAY SWITCH	+4'-0"	
$K	KEY OPERATED SWITCH	+4'-0"	
$M	MOMENTARY CONTACT SWITCH	+4'-0"	
$P	SWITCH WITH PILOT LIGHT	+4'-0"	
$T	THERMAL OVERLOAD SWITCH WITH PILOT LIGHT	+4'-0"	SQ.D 2510
	VARIABLE INTENSITY SWITCH	+4'-0"	
	TIMER SWITCH	+4'-0"	
	MOTION SENSOR		
	COMBINATION SWITCH & DUPLEX RECEPTACLE	+4'-0"	
	DUPLEX RECEPTACLE	+16"	
A	DUPLEX RECEPTACLE		9.
W	ELECTRIC WATER COOLER RECEPTACLE		SEE DETAIL
WP	WEATHERPROOF RECEPTACLE	+24"	P&S WPD-8
IG	ISOLATED GROUND RECEPTACLE	+16"	
GFI	GROUND FAULT INTERUPTER DUPLEX RECEPTACLE		9.
	FOURPLEX RECEPTACLE		9.
	FLOOR OUTLET WITH 20A DEVICE	FLOOR	STEEL CITY
	SPECIAL PURPOSE OUTLET	+24" OR AS NOTED	10. WITH CAP
	CABLE TRAY	AS NOTED	SEE DETAIL
	PLUGMOLD	+46" OR AS NOTED	WIREMOLD 2000 SERIES GA/GB
	TELEVISION OUTLET BOX & PLATE ONLY	+16"	4" SQUARE J-BOX
	TELEPHONE / DATA OUTLET	+16"	
	TELEPHONE OUTLET	FLOOR	STEEL CITY
J	JUNCTION BOX ('F' IN FLOOR)	AS NOTED	
	MOTOR OUTLET	TO SUIT EQUIP.	
P	PHOTO-ELECTRIC CONTROL	AS NOTED	TORK 2000A
T	TIME CLOCK	+5'-0"	
	PUSHBUTTON	+4'-6"	
	NON-FUSED DISCONNECT SWITCH	+5'-0"	SQ.D GEN. DUTY 5
F	FUSED DISCONNECT SWITCH	+5'-0"	SQ.D GEN. DUTY 5
	MAGNETIC STARTER	+5'-0"	SQ.D 8536 7
	MAGNETIC STARTER / NON-FUSED DISCONNECT COMBINATION	+5'-0"	SQ.D 8538 7
	MAGNETIC STARTER / FUSED COMBINATION	+5'-0"	SQ.D 8538 7
	MAGNETIC STARTER / BREAKER COMBINATION	+5'-0"	SQ.D 8539 7
	PANEL BOARD	TOP AT +5'-0"	
	MAIN DISTRIBUTION PANEL		
	TELEPHONE TERMINAL BOARD		
	CLOCK SIMPLEX #2310/2975-9038 12"SQ	+7'-6"	
F	FIRE ALARM MANUAL STATION		
H	FIRE ALARM SIGNAL HORN/PROJECTORS	+7'-6"	
H	FIRE ALARM SIGNAL HORN	+7'-6"	
S	SMOKE DETECTOR	CEILING	
D	DUCT SMOKE DETECTOR		MTD. IN DUCT
H	HEAT DETECTOR	CEILING	6.
	DOOR HOLDER	AS NOTED	
FS	FLOW SWITCH		
TS	TAMPER SWITCH		
SP	FAN SHUTDOWN RELAY		
	O.S. & Y. VALVE		SEE DETAIL
842	ARCHITECTURAL ROOM NUMBER		
A	LIGHT FIXTURE (LETTER DESIGNATES TYPE)		
EQ 34	EQUIPMENT NUMBER		

LIGHTING CONTACTOR SCHEDULE

CONTACTOR CABINET	CONTACTOR NUMBER	NO. OF POLES	METHOD OF CONTROL	CONTROLLED CIRCUITS	CONTROLLED AREA
#1	#1	12	MOMENTARY CONTACT SWITCH #1	F-1,3,5,7,9,11, 13,15,17,19	NORTH RESOURCE CENTER VALANCE
#1	#2	12	MOMENTARY CONTACT SWITCH #1	F-21,23,25,27,29 31,33,35,37	CENTER RESOURCE CENTER VALANCE
#1	#3	12	MOMENTARY CONTACT SWITCH #1	F-2,4,6,8,10,12 14,16,18,20,22	SOUTH RESOURCE CENTER VALANCE
#1	#4	12	MOMENTARY CONTACT SWITCH #1	F-24,26,28,30,32 G-1,3,5,7,9,11	CORRIDORS AND STUDY AREA VALANCE
#1	#5	12	MOMENTARY CONTACT SWITCH #2	G-13,15,17,19,21 23,25,27,29,31,33	RESOURCE CENTER
#1	#6	12	MOMENTARY CONTACT SWITCH #2	G-35,37,39,2,8,12 14,16,20 F-36	RESOURCE CENTER AND CORRIDOR
#2	#1	2	MOMENTARY CONTACT SWITCH	A-2	CLEAR STORY
#2	#2	4	MOMENTARY CONTACT SWITCH	A-1,3,5	CLEAR STORY
#2	#2	4	PHOTO CELL & TIME CLOCK	A-4,6	SKY LIGHT

~~CONTACTORS TO BE MECHANICALLY HELD SQUARE "D" CLASS 8903 QUANTITY AS REQUIRED.~~

LIGHT FIXTURE SCHEDULE

	TYPE	MANUFACTURER	CATALOG NO.	MOUNTING	LAMPS
**	A	LITHONIA	S-140HRS-SM40-120-ES	CHAIN DETAIL	(1)F40 SP35/WM
	B	LITHONIA	(6)S140(1)S130(6)C240	SEE DETAIL 10/A18	(18)F40SP35/WM
	-		(1)C230-HRS-120-ES-W/PLA LOUVER		(3)F30SP35/WM
	C	LITHONIA	(7)S140(7)C240HRS-120ES	SEE DETAIL 10/A18	(21)F40SP35/WM
	-		W/PLA LOUVER	-	-
	D	LITHONIA	(2)S140 (2)C240HRS-120-ES	SEE DETAIL 10/A18	(6)F40SP35/WM
	-		W/PLA LOUVER	-	-
	E	LITHONIA	(2)S130(2)C230HRS-120-ES		(6)F30SP35/WM
	-		W/PLA LOUVER		-
	F	LITHONIA	(4)S140(4)C240HRS-120-ES	SEE DETAIL 10/A18	(12)F40SP35/WM
	-		W/PLA LOUVER		-
**	G	LITHONIA	EJ240-120-ES	SUSPENDED	(2)F40SP35/WM
	H	LITHONIA	8T-S140HRS-120-ES	SURF. COVE	(2)F40SP35/WM
	I	KOSMAN	MS106PH-LPF-MSR-120	SURFACE	(1)6W-T5
	J	LITHONIA	2PM3GI-340-18-W-120-ES-W/	LAY-IN	(3)F40SP35/WM
	-		CUSTOM WHITE SPLAY 30"x60"x3"	-	-
	K	PRUDENTIAL	P-1862-48RS-PRA-120-ESB	WALL	(2)F40SP35/WM
	L	LITHONIA	2PM3GH-340-18W-120-ES	SURFACE	(3)F40SP35/WM
	M	LITHONIA	CW13-175M-AR-120-BL	SURFACE	(1)175MH
	N	LITHONIA	2SPG3-440-PC35-120-DM W/SPLAY	FLANGED	(4)F40SP35/WM
	O	LITHONIA	A6MB-CBH27	RECESSED	(1)150A
	P	LITHONIA	T12WH/TA1WH-TCR40WH	SURFACE	150W R40
	Q	LITHONIA	T8WH/TA5WH-TCR40WHTAP1-30"	PENDENT	150W R40
	R	LITHONIA	TFG400M-RB-120	SURF. ADJ. YOKE	(1)400MH
	S	KIM	AFL2-175MH-120-BLE-PTBLE	2" PIPE	(1)175MH
	T	LITHONIA	AH250M12AR-120	RECESSED	(1)250W MH
	U	DEVINE	DLS1-100MH-120	WALL	(1)100MH
	~~V~~	~~LITHONIA~~	~~CWD-8A-MB-BL~~	~~WALL~~	(2)150W R40
**	~~W~~	~~LITHONIA~~	~~2M440 RM-A12.125-120-ES~~	~~SUSPENDED~~	4F40SP35/WM
	X	LITHONIA	F2ES1G-120	UNIV.	INCLUDED
*	Y	LITHONIA	4PM3PH-640-36-W-120-ES	FLANGED	(6)F40SP35/WM
	Z	LITHONIA	LP-RW2	RECESSED	(1) 150W A
	AA	LITHONIA	SPF240-A12.125-120-ES-FR	FLANGED	(2)F40 SP35/WM

* C/W UV TUBE GUARDS ON LAMPS ~~NORTON #.04 U.V. 0%~~

** FIXTURE TO BE MOUNTED +10'-0" ABOVE FLOOR TO BOTTOM FIXTURE

NOTE:

ADDITIONAL ELECTRICAL WORK AS PART OF THIS CONTRACT IS SHOWN ON LANDSCAPE DRAWINGS. SEE DRAWINGS L-4, L-7 & L-9 FOR EXTERIOR LIGHTING, DETAILS AND ADDITIONAL FIXTURE SCHEDULE.

0000AQE1-1
Utah Valley Community College Learning Resource Center - RV 90-014
Notes and Schedules - 7259

AS BUILTS

REGISTERED PROFESSIONAL ENGINEER ROBERT J. BECHERER No. 4222 STATE OF UTAH

UTAH VALLEY COMMUNITY COLLEGE LEARNING RESOURCE CENTER / LIBRARY ADDITION

ELECTRICAL NOTES AND SCHEDULES

STRUCTURAL ENGINEER : Bsumek Mu and Associates
MECHANICAL ENGINEER : VanBoerum and Frank
ELECTRICAL ENGINEER : Becherer Nielson and Associates
LANDSCAPE ARCHITECT : MGB and Associates
INTERIOR DESIGNER : Don Harward

DRAWN BY: BNA
CHECKED BY: RKR

Scott, Louie and Browning
architects, engineers, planners
4766 Holladay Boulevard, Salt Lake City, Utah 84117

Utah Valley Community College
Learning Resource Center/Library Addition
Orem, Utah DFCM Project No. RV:90-014

E1-1
FEB. 18, 1991

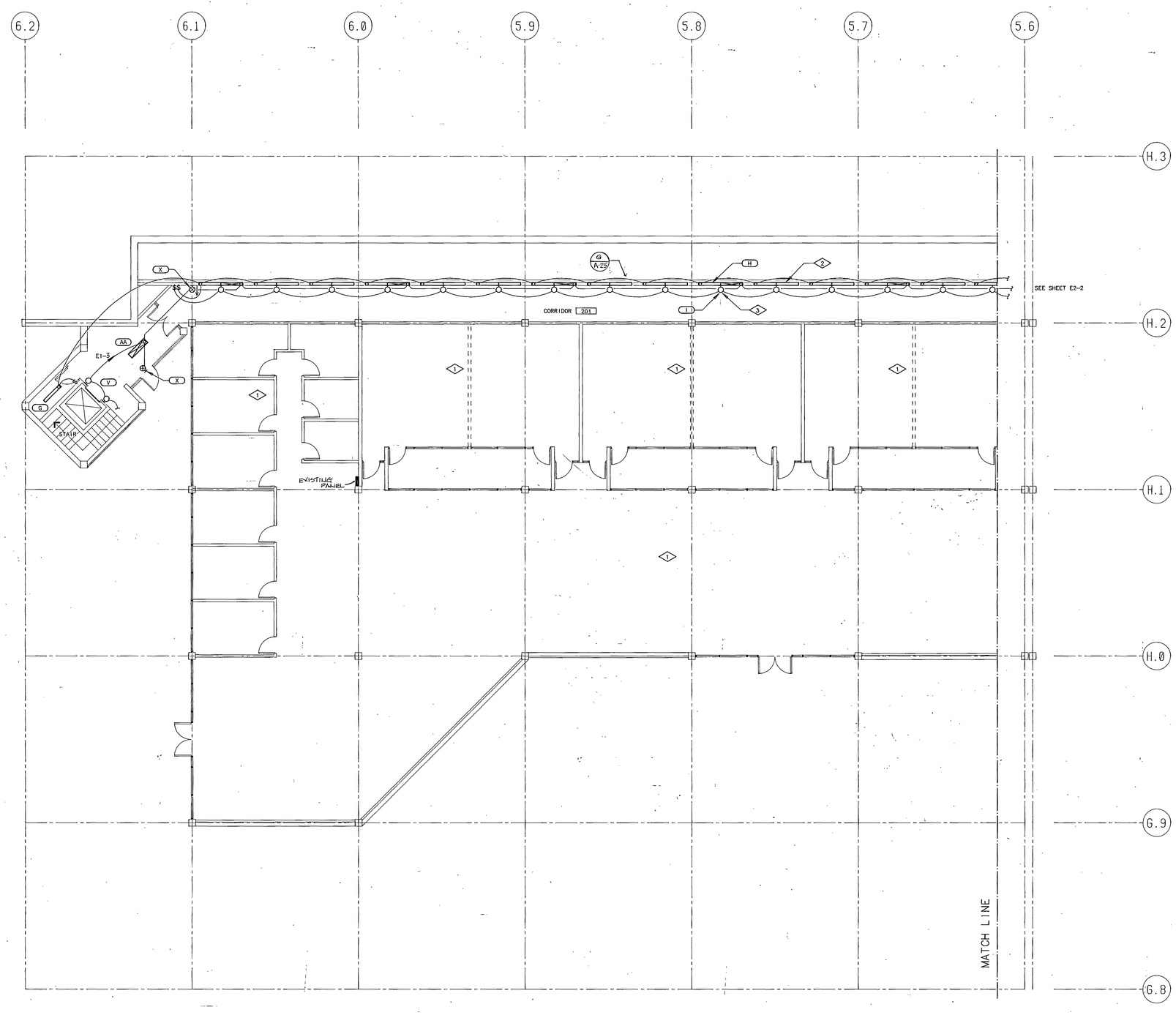

REFERENCE NOTES

1. EXISTING LIGHTING TO REMAIN PROTECT DURING CONSTRUCTION.
2. STRIP LIGHT MOUNTED IN COVE SEE ARCHITECTURAL DETAIL F/A-12.
3. LIGHTING FIXTURE MOUNTED AT TOP OF LIGHT POCKET SEE ARCHITECTURAL DETAIL G/A-25.

LIGHTING PLAN

SCALE = 1/8" = 1'-0"

LEVEL 2 NORTH

T.N.

0000AQE2-1
Utah Valley Community College Learning Resource Center - RV 90 014
Lighing Plan Level 2 North - 7260

AS BUILTS

REGISTERED PROFESSIONAL ENGINEER
ROBERT J. BECHERER
NO. 6222
STATE OF UTAH

UTAH VALLEY COMMUNITY COLLEGE LEARNING RESOURCE CENTER/LIBRARY ADDITION

STRUCTURAL ENGINEER	: Bsumek Mu and Associates
MECHANICAL ENGINEER	: VanBoerum and Frank
ELECTRICAL ENGINEER	: Becherer Nielson and Associates
LANDSCAPE ARCHITECT	: MGB and Associates
INTERIOR DESIGNER	: Don Harward

DRAWN BY: BWD
CHECKED BY: RKR

Scott, Louie and Browning
architects, engineers, planners
4766 Holladay Boulevard, Salt Lake City, Utah 84117

Utah Valley Community College
Learning Resource Center/Library Addition
Orem, Utah DFCM Project No. RV:90-014

E2-1
FEB. 18, 1991

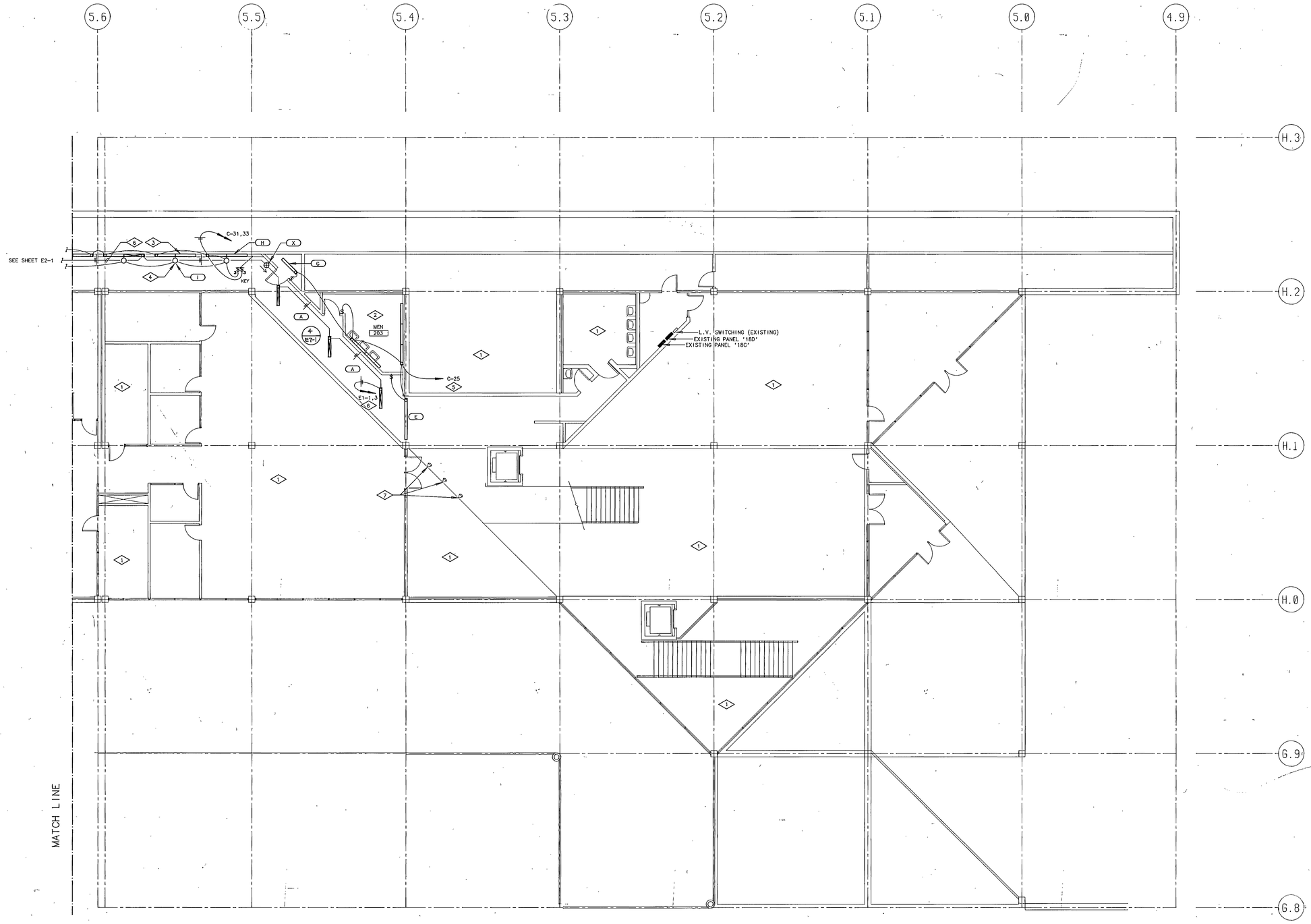

REFERENCE NOTES

1. EXISTING LIGHTING TO REMAIN PROTECT DURING CONSTRUCTION.
2. NEW LOCATION OF EXISTING LIGHTING FIXTURES. CLEAN & RELAMP.
3. STRIP LIGHT MOUNTED IN COVE SEE ARCHITECTURAL DETAIL F/A-25.
4. LIGHT FIXTURE MOUNTED AT TOP LIGHT POCKET SEE ARCHITECTURAL DETAIL F/A-25.
5. EXISTING 120V CIRCUIT.
6. USE #10TW CONDUCTORS.
7. REMOVE EXISTING TRACK LIGHT FIXTURES AND RETURN TO OWNER.

LIGHTING PLAN

SCALE = 1/8" = 1'-0"

LEVEL 2 SOUTH

T.N.

0000AQE2-2
Utah Valley Community College
Lighting Plan level 2 south

AS BUILTS

REGISTERED PROFESSIONAL ENGINEER
ROBERT L. BECKERER
No. 4222
STATE OF UTAH

UTAH VALLEY COMMUNITY COLLEGE LEARNING RESOURCE CENTER/LIBRARY ADDITION

STRUCTURAL ENGINEER : Bsumek Mu and Associates
MECHANICAL ENGINEER : VanBoerum and Frank
ELECTRICAL ENGINEER : Becherer Nielson and Associates
LANDSCAPE ARCHITECT : MGB and Associates
INTERIOR DESIGNER : Don Harward

DRAWN BY: BND
CHECKED BY: RKB

Scott, Louie and Browning
architects, engineers, planners
4766 Holladay Boulevard, Salt Lake City, Utah 84117

Utah Valley Community College
Learning Resource Center/Library Addition
Orem, Utah DFCM Project No. RV:90-014

E2-2
FEB. 18, 1991

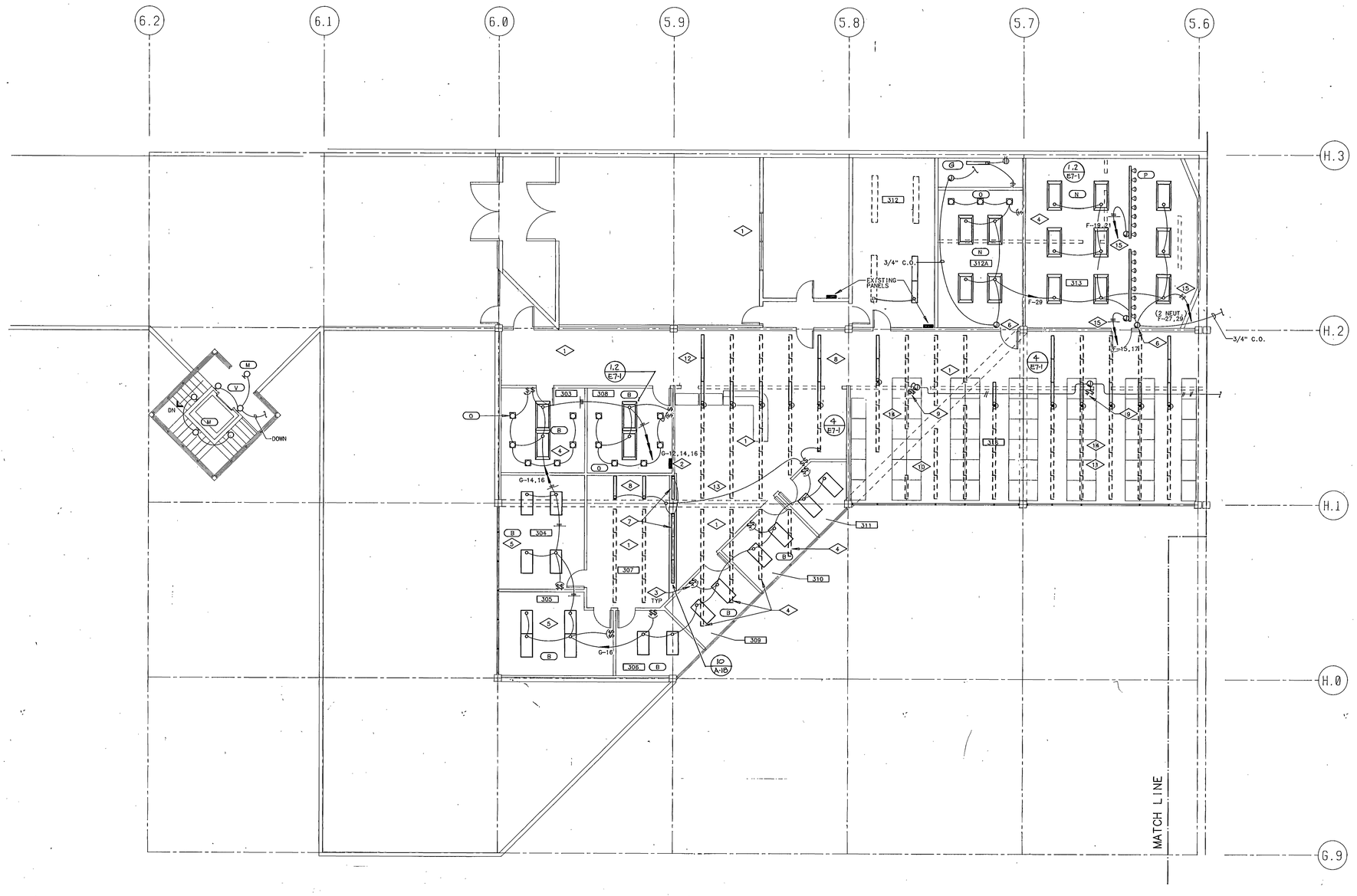

REFERENCE NOTES

1. EXISTING LIGHTING TO REMAIN PROTECT DURING CONSTRUCTION. REWIRE AS SHOWN.
2. NEW PANEL "33G" 120/208V, 3 PHASE, 4W.
3. TWO LEVEL SWITCHING 1/3 OR 2/3 OR FULL.
4. EXISTING LIGHTING TO BE REMOVED AND RETURNED TO THE OWNER.
5. REMOVE EXISTING FIXTURES, REINSTALL AND RELAMP AS SHOWN.
6. TWO GANG BOX FOR CONTROLS BY OTHERS ROUTE 3/4" CONDUIT AS SHOWN.
7. EXISTING FIXTURES REINSTALL IN NEW VALANCE ENCLOSURES.
8. EXISTING FIXTURES REINSTALL AS SHOWN.
9. REMOVE EXISTING SWITCHES MODIFY EXISTING TWO LEVEL WIRING FOR SINGLE LEVEL AREA SWITCHING SEE SHEET E2-4 FOR NEW SWITCH LOCATIONS.
10. RELAMP ALL EXISTING FLUORESCENT FIXTURES IN THIS BAY. (43) F40SP35. (11) F30SP35. CLEAN FIXTURES AND REFLECTORS BEFORE RELAMPING.
11. RELAMP ALL EXISTING FLUORESCENT FIXTURES IN THIS BAY. (50) F40SP35. (6) F30SP35. CLEAN FIXTURES AND REFLECTORS BEFORE RELAMPING.
12. RELAMP ALL FLUORESCENT FIXTURES IN THE CORRIDOR (18) F40SP35. CLEAN FIXTURES AND REFLECTORS BEFORE RELAMPING.
13. RELAMP ALL EXISTING STRIP FLUORESCENT FIXTURES IN THIS AREA. (42) F40SP35. CLEAN FIXTURES AND REFLECTORS BEFORE RELAMPING.
14. REMOVE EXISTING LIGHTING FIXTURES AND REINSTALL EXISTING FIXTURES TO MAKE LAYOUT AS SHOWN.
15. ROUTE ALL CIRCUITS THROUGH DIMMER RACK SEE SHEET E2-4.

LIGHTING PLAN

SCALE = 1/8" = 1'-0" LEVEL 3 NORTH

T.N.

00C0A02E2-3
UTAH Valley Community College
Lighting Plan Level 3 North

AS BUILTS

REGISTERED PROFESSIONAL ENGINEER
NORBERT J. BROHELER
STATE OF UTAH

UTAH VALLEY COMMUNITY COLLEGE LEARNING RESOURCE CENTER/LIBRARY ADDITION

STRUCTURAL ENGINEER : Bsumek Mu and Associates
MECHANICAL ENGINEER : VanBoerum and Frank
ELECTRICAL ENGINEER : Becherer Nielson and Associates
LANDSCAPE ARCHITECT : MSB and Associates
INTERIOR DESIGNER : Don Harward

DRAWN BY: BLA
CHECKED BY: EKE

Scott, Louie and Browning
architects, engineers, planners
4766 Holladay Boulevard, Salt Lake City, Utah 84117

Utah Valley Community College
Learning Resource Center/Library Addition
Orem, Utah DFCM Project No. RV:90-014

E2-3
FEB. 18, 1991

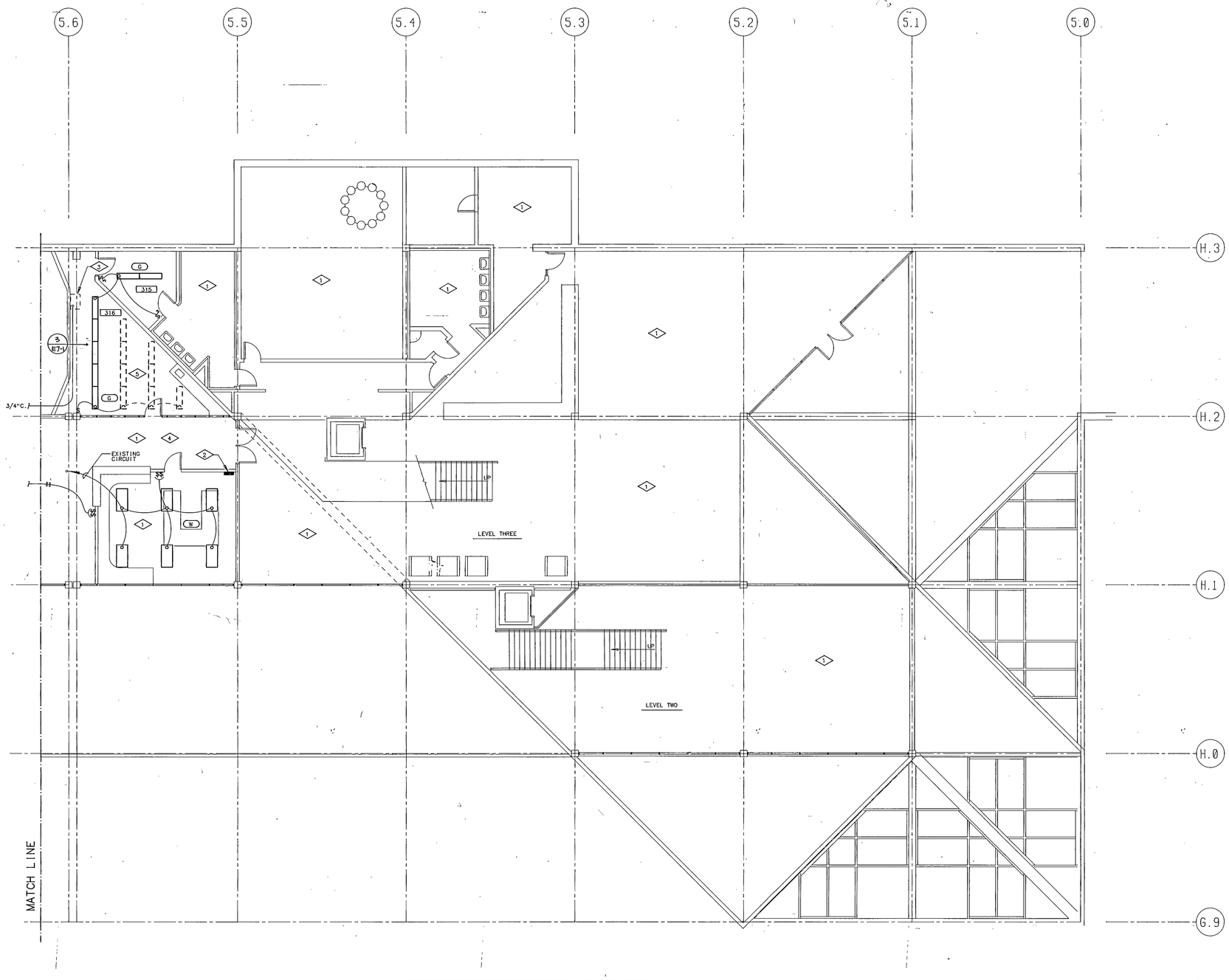

REFERENCE NOTES

1. EXISTING LIGHTING TO REMAIN PROTECT DURING CONSTRUCTION
2. NEW PANEL 'F33' 120/208V, 3 PHASE, 4W
3. DIMMER CONTROL RACK BY OTHERS COORDINATE EXACT LOCATION WITH OWNER
4. RELAMP EXISTING FIXTURES IN CORRIDOR (6) F40SP35 LAMPS REQUIRED
5. RELAMP EXISTING FIXTURES (16) F40SP35 LAMPS CLEAN FIXTURE AND REFLECTOR PRIOR TO RELAMPING

LIGHTING PLAN

SCALE = 1/8" = 1'-0"

LEVEL 3 SOUTH

T N.

COORD. E2-4
Utah Valley Community College
Lighting Plan Level 3 South

AS BUILTS

REGISTERED PROFESSIONAL ENGINEER
ROBERT J. BECHERER
No. 4232
STATE OF UTAH

UTAH VALLEY COMMUNITY COLLEGE LEARNING RESOURCE CENTER/LIBRARY ADDITION

STRUCTURAL ENGINEER	Bsumek Mu and Associates
MECHANICAL ENGINEER	VanBoerum and Frank
ELECTRICAL ENGINEER	Becherer Nielson and Associates
LANDSCAPE ARCHITECT	MGB and Associates
INTERIOR DESIGNER	Don Harward

DRAWN BY BNA
CHECKED BY RBB

Scott, Louie and Browning
architects, engineers, planners
4766 Holladay Boulevard Salt Lake City Utah 84117

Utah Valley Community College
Learning Resource Center/Library Addition

Orem, Utah DFCM Project No. RV-90-014

E2-4

FEB 18, 1991

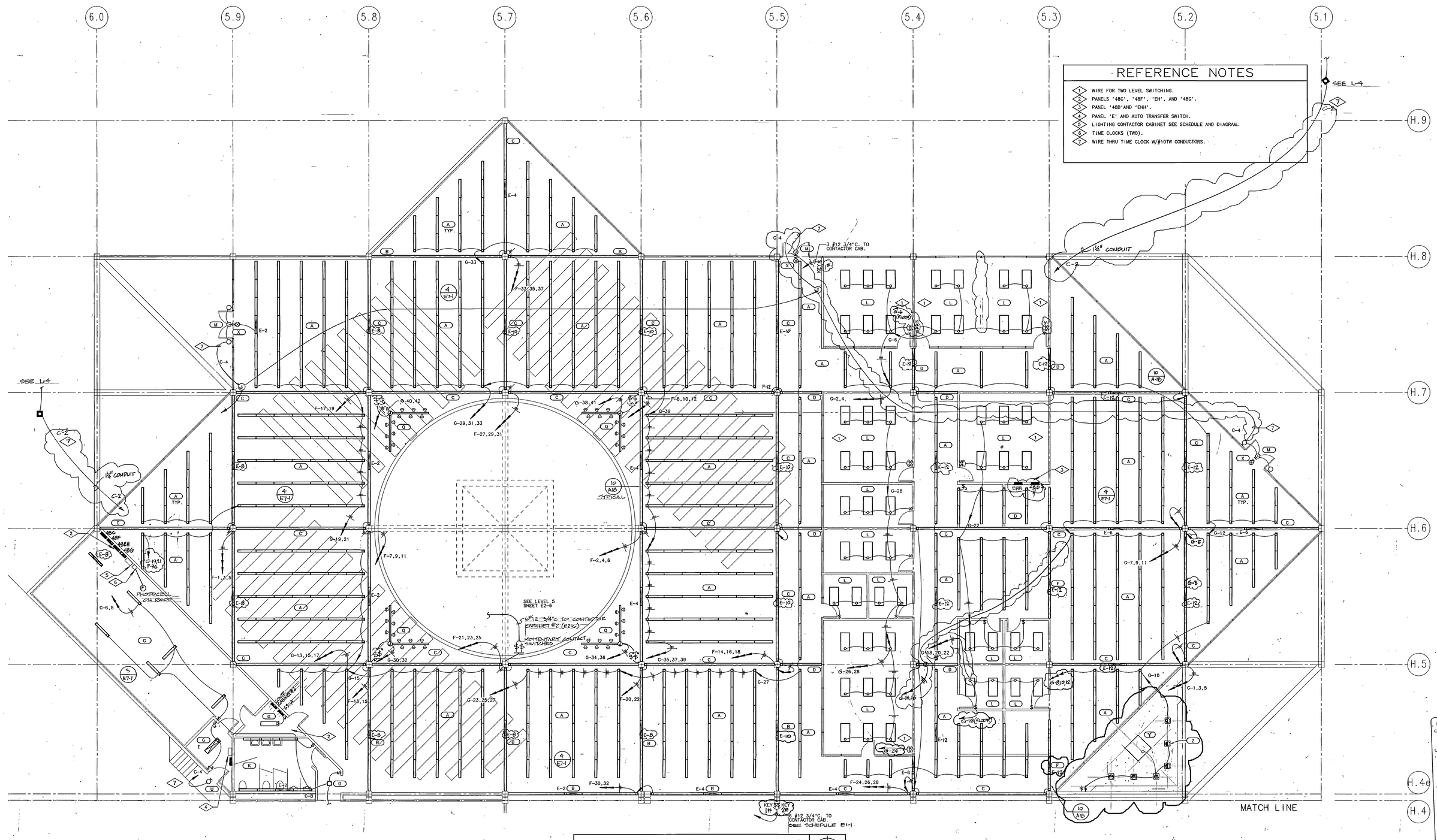

REFERENCE NOTES

1. WIRE FOR TWO LEVEL SWITCHING.
2. PANELS '48C', '48F', 'EH', AND '48G'.
3. PANEL '48D' AND 'EHH'.
4. PANEL 'E' AND AUTO TRANSFER SWITCH.
5. LIGHTING CONTACTOR CABINET SEE SCHEDULE AND DIAGRAM.
6. TIME CLOCKS (TWO).
7. WIRE THRU TIME CLOCK W/#10TW CONDUCTORS.

LIGHTING PLAN

SCALE = 1/8" = 1'-0"

LEVEL 4 EAST.

T.N.

0000 AQ E2-5
UTAH Valley Community College
Lighting Plan Level 4 East

AS BUILTS

REGISTERED PROFESSIONAL ENGINEER
ROBERT J. BECHERER
No. 4222
STATE OF UTAH

UTAH VALLEY COMMUNITY COLLEGE LEARNING RESOURCE CENTER/LIBRARY ADDITION

STRUCTURAL ENGINEER	: Bsumek Mu and Associates
MECHANICAL ENGINEER	: VanBoerum and Frank
ELECTRICAL ENGINEER	: Becherer Nielson and Associates
LANDSCAPE ARCHITECT	: MGB and Associates
INTERIOR DESIGNER	: Don Harward

DRAWN BY: BNA
CHECKED BY: RKB

Scott, Louie and Browning
architects, engineers, planners
4766 Holladay Boulevard, Salt Lake City, Utah 84117

Utah Valley Community College
Learning Resource Center/Library Addition

Orem, Utah DFCM Project No. RV:90-014

E2-5

FEB. 18, 1991

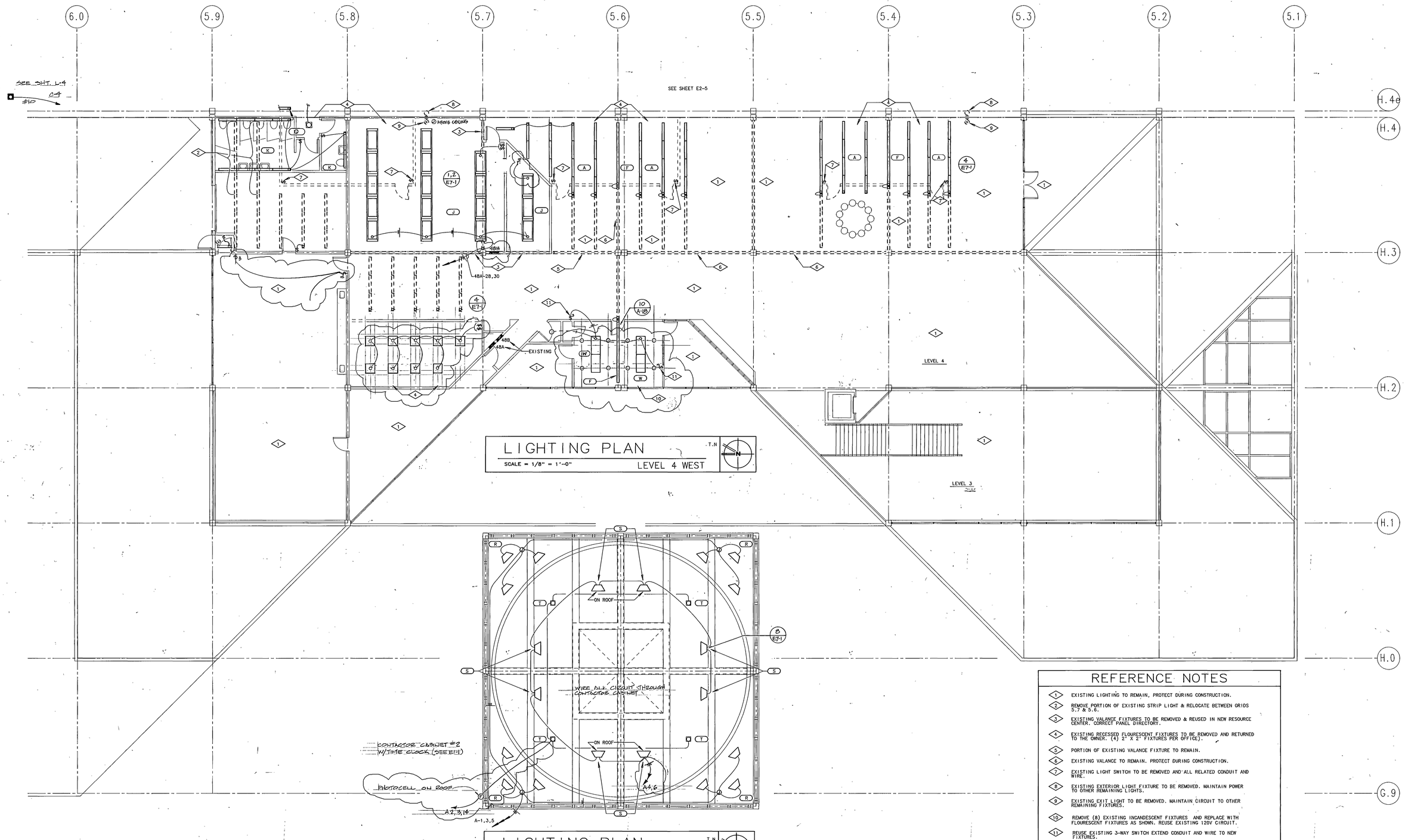

REFERENCE NOTES

1. EXISTING LIGHTING TO REMAIN, PROTECT DURING CONSTRUCTION.
2. REMOVE PORTION OF EXISTING STRIP LIGHT & RELOCATE BETWEEN GRIDS 5.7 & 5.6.
3. EXISTING VALANCE FIXTURES TO BE REMOVED & REUSED IN NEW RESOURCE CENTER. CORRECT PANEL DIRECTORY.
4. EXISTING RECESSED FLOURESCENT FIXTURES TO BE REMOVED AND RETURNED TO THE OWNER. (4) 2' X 2' FIXTURES PER OFFICE).
5. PORTION OF EXISTING VALANCE FIXTURE TO REMAIN.
6. EXISTING VALANCE TO REMAIN. PROTECT DURING CONSTRUCTION.
7. EXISTING LIGHT SWITCH TO BE REMOVED AND ALL RELATED CONDUIT AND WIRE.
8. EXISTING EXTERIOR LIGHT FIXTURE TO BE REMOVED. MAINTAIN POWER TO OTHER REMAINING LIGHTS.
9. EXISTING EXIT LIGHT TO BE REMOVED. MAINTAIN CIRCUIT TO OTHER REMAINING FIXTURES.
10. REMOVE (8) EXISTING INCANDESCENT FIXTURES AND REPLACE WITH FLOURESCENT FIXTURES AS SHOWN. REUSE EXISTING 120V CIRCUIT.
11. REUSE EXISTING 3-WAY SWITCH EXTEND CONDUIT AND WIRE TO NEW FIXTURES.

D000 A.R.E.2-6
UTAH VALLEY Community College
Lighting Plan Level 5

AS BUILTS

REGISTERED PROFESSIONAL ENGINEER
ROBERT A. BROWNER
No. 4222
STATE OF UTAH

UTAH VALLEY COMMUNITY COLLEGE LEARNING RESOURCE CENTER/LIBRARY ADDITION

STRUCTURAL ENGINEER	: Bsumek Mu and Associates
MECHANICAL ENGINEER	: VanBeerum and Frank
ELECTRICAL ENGINEER	: Bedterer Nielson and Associates
LANDSCAPE ARCHITECT	: MGB and Associates
INTERIOR DESIGNER	: Don Harward

DRAWN BY: BJA
CHECKED BY: RAB

Scott, Louie and Browning
architects, engineers, planners
4766 Holladay Boulevard, Salt Lake City, Utah 84117

Utah Valley Community College
Learning Resource Center/Library Addition

Orem, Utah DFCM Project No. RV-90-014

E2-6

FEB. 18, 1991

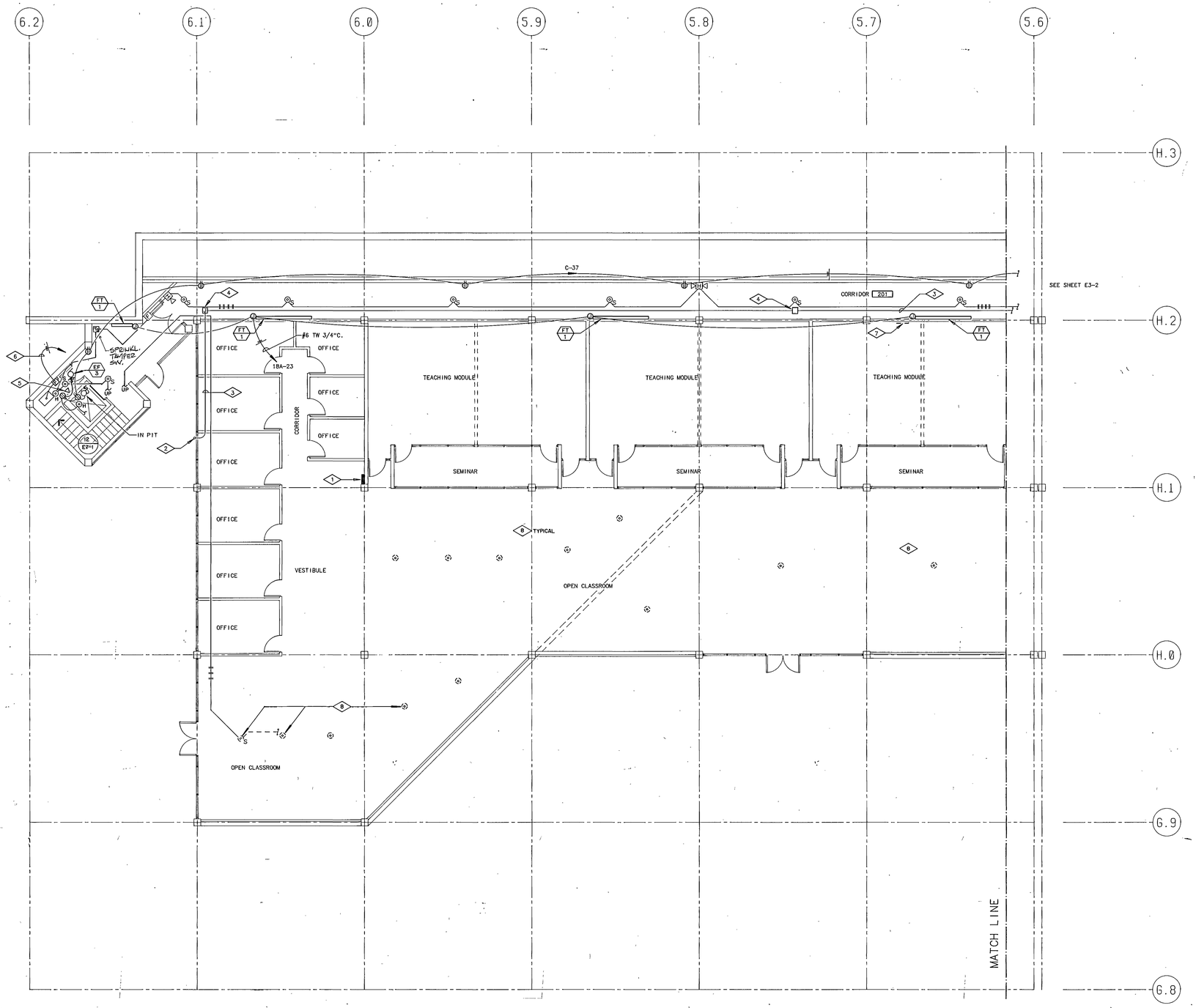

REFERENCE NOTES

1. EXISTING PANEL '18A' 120/208V, 3 PHASE INSTALL NEW 2P-20A BREAKER TO POWER FIN TUBE HEATERS.
2. 2 1/2" & 1" CONDUIT TO EXISTING SATELLITE DISH ON EXTERIOR EDGE OF BUILDING, DRILL THROUGH FILLER PANEL SEAL. ROUTE CONDUITS ABOVE CEILING AS SHOWN.
3. 2 1/2" & 1" CONDUIT ROUTED ABOVE CEILING AS SHOWN FOR VIDEO COAX CABLE BY OWNER.
4. 12"x12"x8" PULL BOX ABOVE CEILING.
5. TELEPHONE OUTLET FOR ELEVATOR ROUTE 3/4" CONDUIT TO EXISTING TELEPHONE OUTLET IN ELEVATOR EQUIPMENT ROOM SEE SHEET E3-2.
6. SEE ONE LINE DIAGRAM SHEET E5-1.
7. EXISTING THRU WALL ELECTRIC HEATER TO BE REMOVED, ABANDON ALL RELATED CONDUIT & WIRE, REMOVED ELECTRICAL EQUIPMENT & LEAVE NEAT & SAFE.
8. REMOVE EXISTING SMOKE DETECTOR AND BASE, RE-INSTALL NEW BASE AND DETECTOR. RETURN OLD DETECTOR TO OWNER.

OCCOAQ E3-1
UTAH Valley Community College
Power Plan Level 2 North

AS BUILTS

REGISTERED PROFESSIONAL ENGINEER
ROBERT J. BECHERER
No. 4222
STATE OF UTAH

POWER PLAN

SCALE 1/8" = 1'-0"

LEVEL 2 NORTH

T.N.

UTAH VALLEY COMMUNITY COLLEGE LEARNING RESOURCE CENTER/LIBRARY ADDITION

STRUCTURAL ENGINEER	: Bsumek Mu and Associates
MECHANICAL ENGINEER	: VanBoerum and Frank
ELECTRICAL ENGINEER	: Becherer Nielson and Associates
LANDSCAPE ARCHITECT	: MGB and Associates
INTERIOR DESIGNER	: Don Harward

DRAWN BY: BNA
CHECKED BY: RKR

Scott, Louie and Browning
architects, engineers, planners
4766 Holladay Boulevard, Salt Lake City, Utah 84117

Utah Valley Community College
Learning Resource Center/Library Addition

Orem, Utah DFCM Project No. RV:90-014

E3-1
FEB. 18, 1991

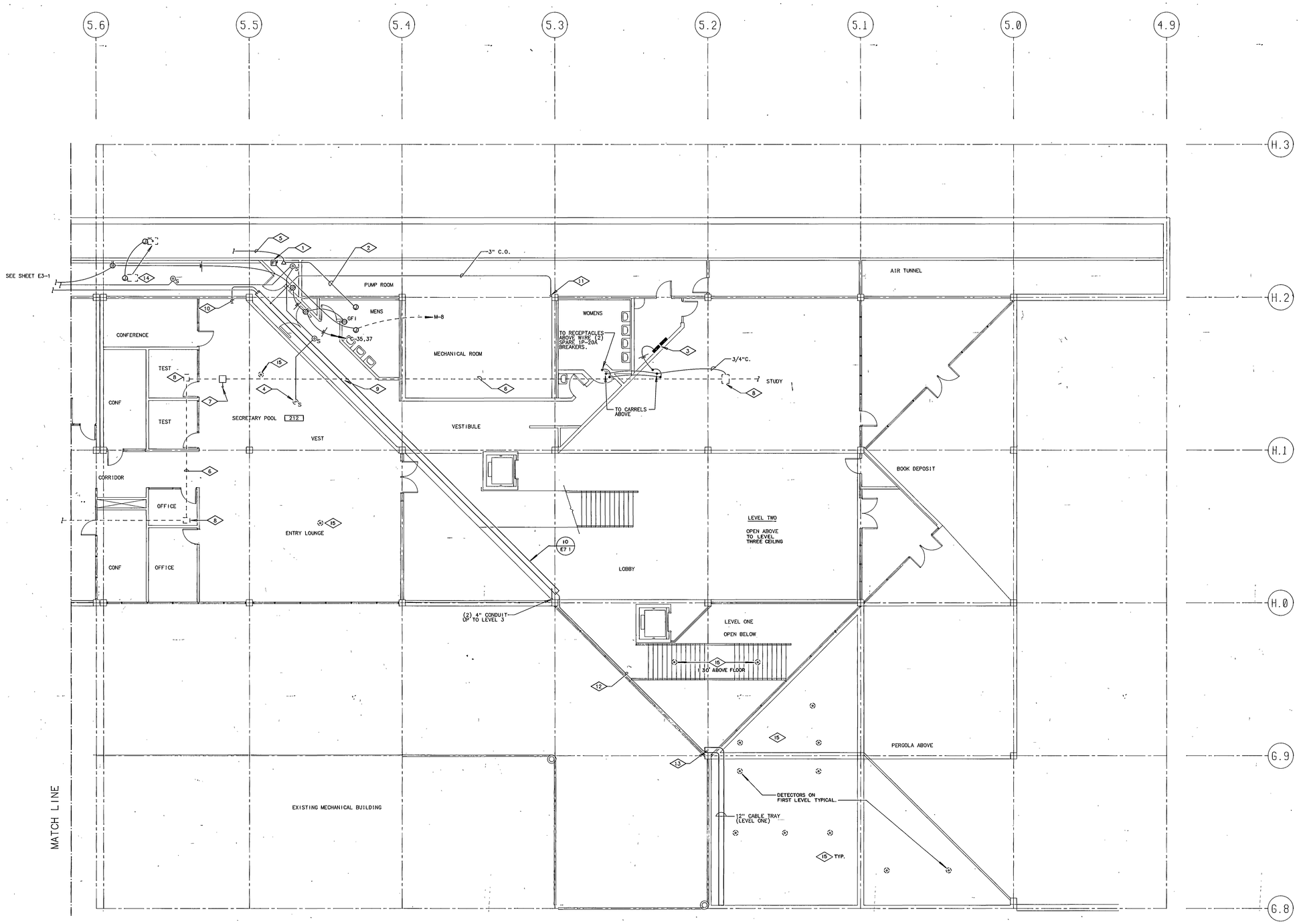

REFERENCE NOTES

1. NEW LOCATION OF EXISTING 60A FUSED DISCONNECT EXTEND NEW CONDUIT W/#6 WIRE TO NEW LOCATION AND RECONNECT ELEVATOR EQUIPMENT.
2. EXTEND TELEPHONE CONDUIT AS SHOWN. (ALL CABLING BY UVCC).
3. EXISTING PANEL 18C & 18D.
4. TIE NEW FIRE ALARM WIRING INTO EXISTING LOOP AT EXISTING DETECTOR.
5. 3/4" CONDUIT TO TELEPHONE OUTLET IN NEW ELEVATOR EQUIPMENT ROOM.
6. EXISTING 4" CONDUIT TO REMAIN.
7. CUT EXISTING 4" CONDUIT & INSTALL 16"x16"x6" JUNCTION BOX. ROUTE NEW 4" CONDUIT FROM JUNCTION BOX THROUGH FLOOR TO LEVEL 3 ABOVE AS SHOWN. COORDINATE EXACT LOCATION WITH CAMPUS MEDIA DEPARTMENT.
8. EXISTING JUNCTION BOX TO REMAIN.
9. CUT EXISTING 4" CONDUIT ABOVE NEW CABLE TRAY AS SHOWN. INSTALL BUSHINGS ON CONDUIT ENDS.
10. INSTALL (2) 3" CONDUIT TO TRAY AS SHOWN SEAL WALL PENETRATIONS.
11. 3" CONDUIT (EMT) THROUGH FLOOR TO LEVEL 3 ABOVE. STUB THROUGH FLOOR +6" AND INSTALL BUSHING.
12. (2) 4" EMT CONDUITS FOR COMMUNICATIONS AND ELECTRONIC MEDIA CABLES.
13. DROP (2) 4" EMT CONDUIT TO TRAY BELOW AS SHOWN.
14. EXISTING EXHAUST FAN TO BE RELOCATED AS SHOWN. EXTEND ELECTRICAL CIRCUIT TO NEW LOCATION AND RECONNECT MOTOR. COORDINATE WORK WITH MECHANICAL CONTRACTOR.
15. REMOVE EXISTING SMOKE DETECTOR AND BASE, REINSTALL NEW BASE AND DETECTOR. RETURN OLD DETECTOR TO OWNER.

POWER PLAN

SCALE 1/8" = 1'-0" LEVEL 2 SOUTH

T.N.

AS BUILTS

ROBERT J. BECHERER No. 4222 REGISTERED PROFESSIONAL ENGINEER STATE OF UTAH

UTAH VALLEY COMMUNITY COLLEGE LEARNING RESOURCE CENTER/LIBRARY ADDITION

STRUCTURAL ENGINEER	: Bsumek Mu and Associates
MECHANICAL ENGINEER	: VanBoerum and Frank
ELECTRICAL ENGINEER	: Becherer Nielson and Associates
LANDSCAPE ARCHITECT	: MGB and Associates
INTERIOR DESIGNER	: Don Harward

DRAWN BY: BNA
CHECKED BY: RKR

Scott, Louie and Browning
architects, engineers, planners
4766 Holladay Boulevard, Salt Lake City, Utah 84117

Utah Valley Community College
Learning Resource Center/Library Addition
Orem, Utah DFCM Project No. RV:90-014

E3-2
FEB. 18, 1991

0000AQ E3-2
Utah Valley Community College
Power Plan, level 2 South

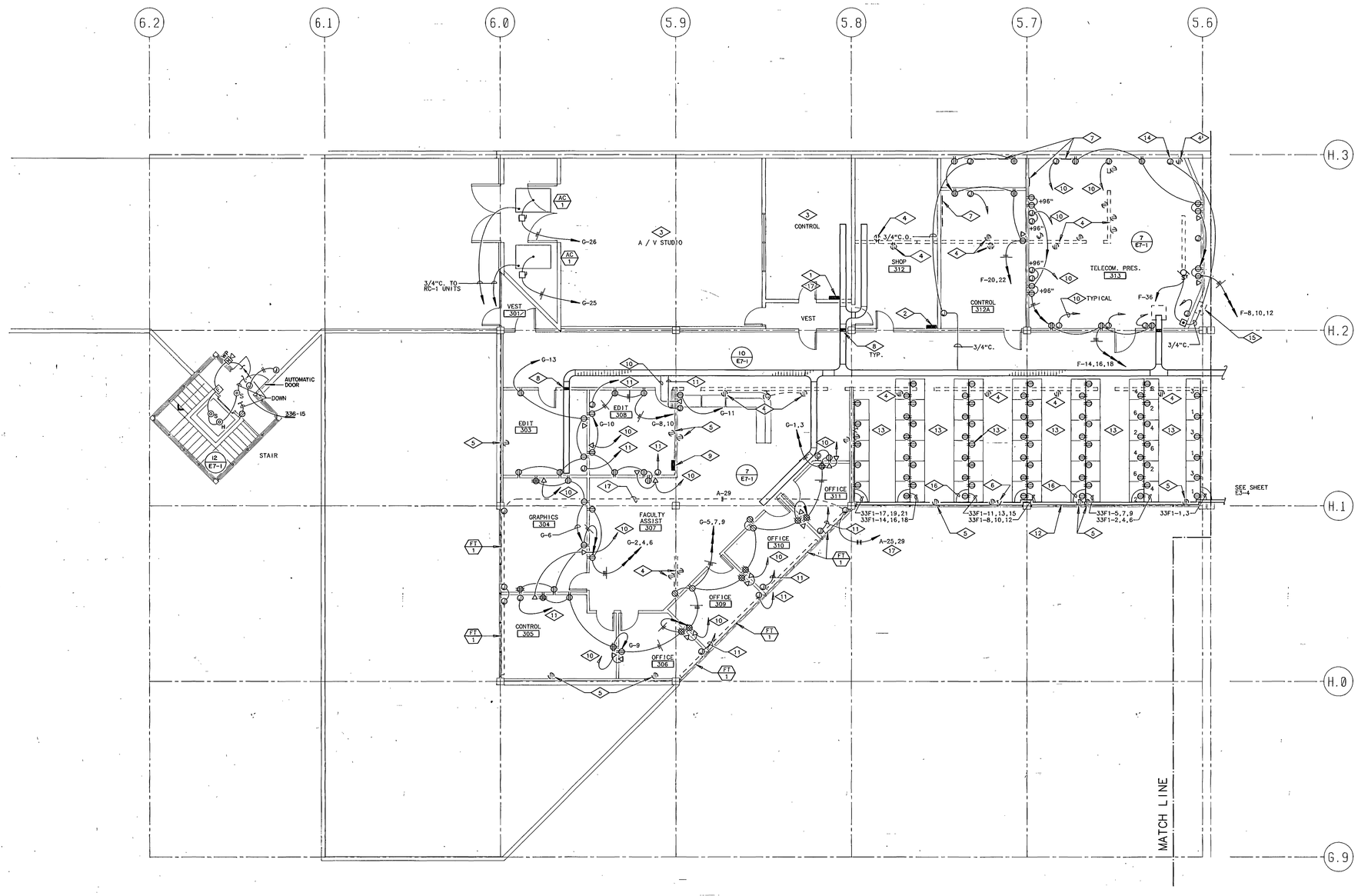

REFERENCE NOTES

1. EXISTING PANEL 33A PROTECT DURING CONSTRUCTION.
2. EXISTING PANEL 33B PROTECT DURING CONSTRUCTION.
3. NO CHANGES TO ELECTRICAL IN THIS AREA.
4. EXISTING OUTLET AND RELATED CONDUIT TO BE REMOVED REWORKED CIRCUIT TO MAINTAIN POWER TO REMAINING EQUIPMENT.
5. EXISTING OUTLET TO REMAIN PROTECT DURING CONSTRUCTION.
6. EXISTING TELEPHONE OUTLET TO REMAIN PROTECT DURING CONSTRUCTION.
7. REMOVE EXISTING PLUGMOLD AND RELATED CONDUIT AND WIRING CORRECT PANEL DIRECTORY.
8. RATED FIRE STOP FILLER IN CABLE TRAY TYPICAL.
9. NEW PANEL '33G' 120/208V, 3 PHASE, 4W
10. 3/4"C.O. TO CABLE TRAY.
11. 1"C.O. TO CABLE TRAY. (4" SQ. BOX W/SINGLE GANG EXT. RING).
12. WALL MOUNTED DOUBLE COMPARTMENT RACEWAY FOR POWER & DATA WIRING. RACEWAY BY ELECTRICAL 'WIREMOLD' G6000 W/ACCESSORIES.
13. DUPLEX CONVENIENCE RECEPTACLES FURNISHED, INSTALLED & WIRED BY ELECTRICAL. DEVICES TO BE MOUNTED IN DUAL COMPARTMENT RACEWAY PROVIDED & INSTALLED ON FURNITURE. (COORDINATE WITH SUPPLIER) DEVICE COLOR TO BE SELECTED BY ENGINEER.
14. 3 GANG BOX W/(3) 3/4" CONDUITS TO EQUIPMENT RACK.
15. EQUIPMENT RACK FURNISHED BY OWNER.
16. 1" FLEXIBLE CONDUIT FOR DATA CABLE (TYPICAL).
17. INSTALL (1) 2P-40A & (1) 2P-30A BREAKER IN EXISTING PANEL 'A' TO POWER ELECTRIC HEAT CIRCUITS A-25,27 WIRE WITH (2) #10, 2#8 TW & GROUND IN EXISTING CONDUIT TO PANEL.

POWER PLAN

SCALE 1/8" = 1'-0"

LEVEL 3 NORTH

T.N.

00004 E3-3
UTAH Valley Community College
Power Plan Level 3 North

AS BUILTS

REGISTERED PROFESSIONAL ENGINEER
ROBERT J. BECHERER
No. 4222
STATE OF UTAH

UTAH VALLEY COMMUNITY COLLEGE LEARNING RESOURCE CENTER/LIBRARY ADDITION

STRUCTURAL ENGINEER	: Bsumek Mu and Associates
MECHANICAL ENGINEER	: VanBoerum and Frank
ELECTRICAL ENGINEER	: Becherer Nielson and Associates
LANDSCAPE ARCHITECT	: MGB and Associates
INTERIOR DESIGNER	: Don Harward

DRAWN BY: BHA
CHECKED BY: RKR

Scott, Louie and Browning
architects, engineers, planners
4766 Holladay Boulevard, Salt Lake City, Utah 84117

Utah Valley Community College
Learning Resource Center/Library Addition

Orem, Utah DFCM Project No. RV:90-014

E3-3

FEB. 18, 1991

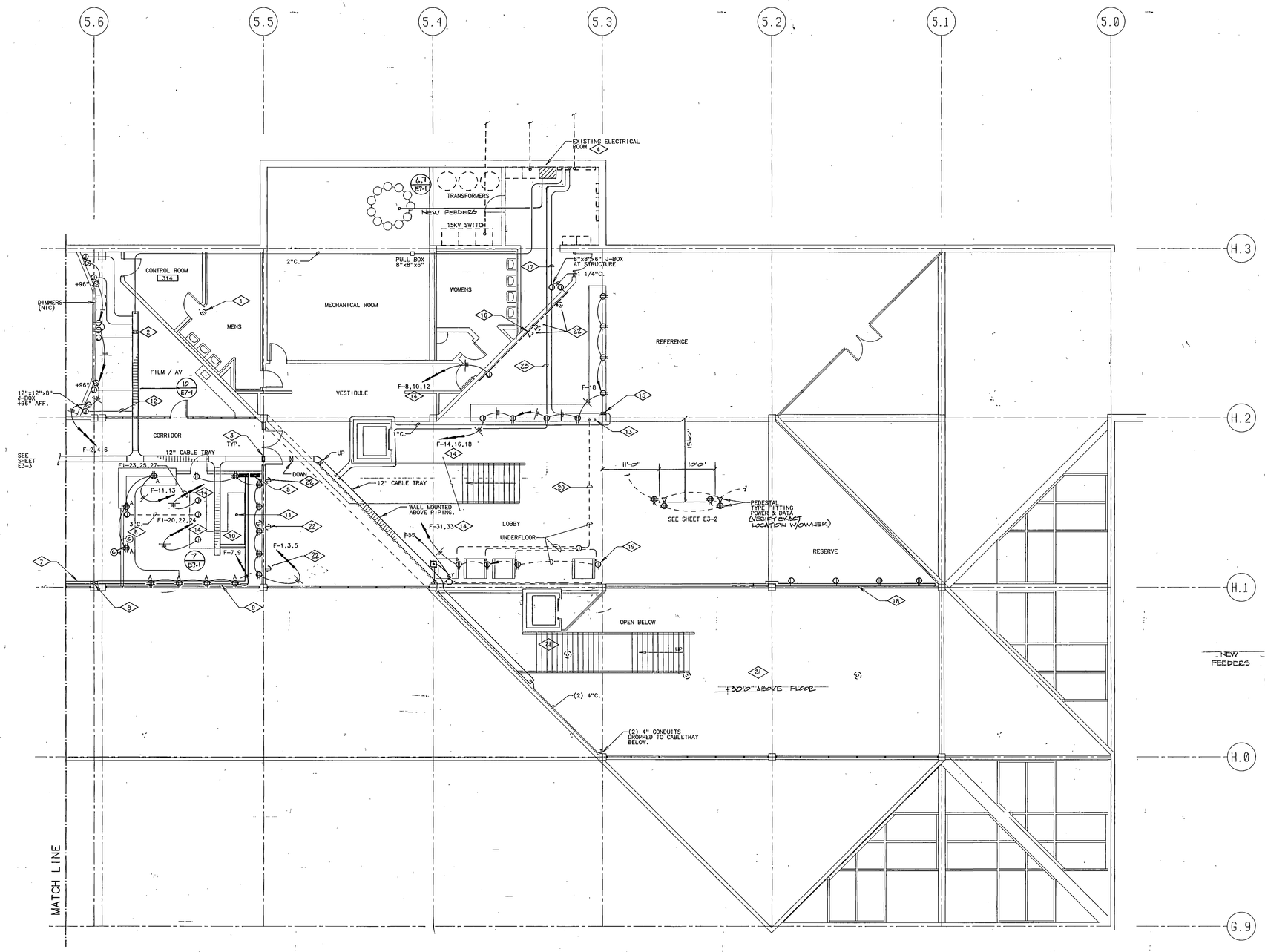

POWER PLAN

SCALE 1/8" = 1'-0" LEVEL 3 SOUTH

T.N.

REFERENCE NOTES

1. EXISTING RECEPTACLE TO BE REMOVED DO NOT DISRUPT POWER TO REMAINING EQUIPMENT.
2. CABLE TRAY RISER TO 4TH LEVEL SEE SHEET E3-6.
3. RATED FIRE STOP FILLER IN CABLE TRAY TYPICAL.
4. SEE ENLARGED PLAN THIS SHEET.
5. NEW PANELS '33F'& '33F1' 120/208V, 3 PHASE, 4W.
6. 3" CONDUIT IN CEILING SPACE OF FLOOR BELOW STUB UP UNDER COUNTER & UNDER EQUIPMENT AS SHOWN. DRILL FLOOR & SEAL AFTER INSTALLATION.
7. WALL MOUNTED DOUBLE COMPARTMENT RACEWAY FOR POWER & DATA WIRING. RACEWAY BY ELECTRICAL 'WIREMOLD' G6000 WITH ACCESSORIES.
8. WALL MOUNTED RACEWAY UP COLUMN AS SHOWN.
9. RACEWAY OVER HEAD TO PANEL '33F1' & TO CABLE TRAY AS SHOWN.
10. OWNER FURNISHED EQUIPMENT RACKS.
11. 4" CONDUIT TO J-BOX ON LEVEL 2.
12. (2) 2" CONDUIT FROM RACK TO TRAY COORDINATE WITH CAMPUS MEDIA DEPARTMENT.
13. 3" CONDUIT THROUGH FLOOR SEE SHEET E3-2.
14. ROUTE CONDUIT UNDERFLOOR TO PANEL '33F' OR '33F1'.
15. WALL MOUNTED RACEWAY TO FLOOR FOR DATA CABLES. WIREMOLD G4000 WITH ACCESSORS FOR TRANSITION TO 2" CONDUIT.
16. WALL MOUNTED RACEWAY DUAL COMPARTMENT RACEWAY WITH DUPLEX RECEPTACLES & DATA CABLE GROMMETS 24" O.C.
17. 2" CONDUIT FOR DATA & COMMUNICATIONS CABLES.
18. EXTEND NEW DUAL COMPARTMENT 5 1/2"x1 1/2" RACEWAY & INSTALL (4) DUPLEX RECEPTACLES WIRED TO EXISTING CIRCUITS.
19. ISOLATED GROUND OUTLET FOR SECURITY GATE POWER PEDESTAL TYPE FITTING W/ISOLATED GROUND RECEPTACLE (ORANGE) ROUTE ALL CONDUIT IS STRUCTURE OF LEVEL 2. COORDINATE EXACT LOCATIONS PRIOR DRILLING FLOOR.
20. 1" CONDUIT (EMT) UNDER FLOOR STUBBED UP AT COUNTER FOR REMOTE ALARM CONTROLS.
21. REMOVE EXISTING SMOKE DETECTOR AND BASE REINSTALL NEW BASE AND DETECTOR. RETURN OLD DETECTOR TO OWNER. (NOTE DETECTORS ARE +30" FROM FLOOR).
22. EXISTING ELECTRICAL EQUIPMENT TO REMAIN PROTECT DURING CONSTRUCTION.
23. (2) 4" EMT CONDUITS FROM TRAY TO EXISTING TELEPHONE BOARD.

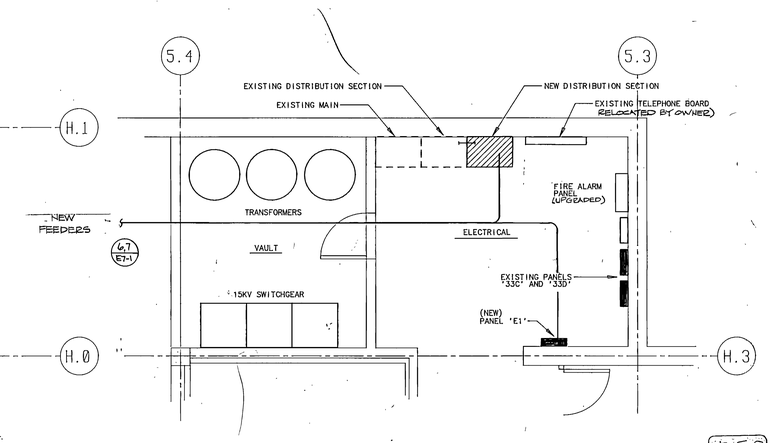

POWER PLAN

SCALE 1/4" = 1'-0" ENLARGED ELEC./XFMR ROOMS

T.N.

DOCOMAQES-4
Utah Valley Community College
Power Plan Level 3 South

AS BUILTS

REGISTERED PROFESSIONAL ENGINEER
ROBERT D. BECKWITH
STATE OF UTAH

UTAH VALLEY COMMUNITY COLLEGE LEARNING RESOURCE CENTER/LIBRARY ADDITION

STRUCTURAL ENGINEER	: Bsumek Mu and Associates
MECHANICAL ENGINEER	: VanBoerum and Frank
ELECTRICAL ENGINEER	: Becherer Nielson and Associates
LANDSCAPE ARCHITECT	: MGB and Associates
INTERIOR DESIGNER	: Don Harward

DRAWN BY: BNS
CHECKED BY: DKB

Scott, Louie and Browning
architects, engineers, planners
4766 Holladay Boulevard, Salt Lake City, Utah 84117

Utah Valley Community College
Learning Resource Center/Library Addition
Orem, Utah DFCM Project No. RV-90-014

E3-4
FEB. 18, 1991

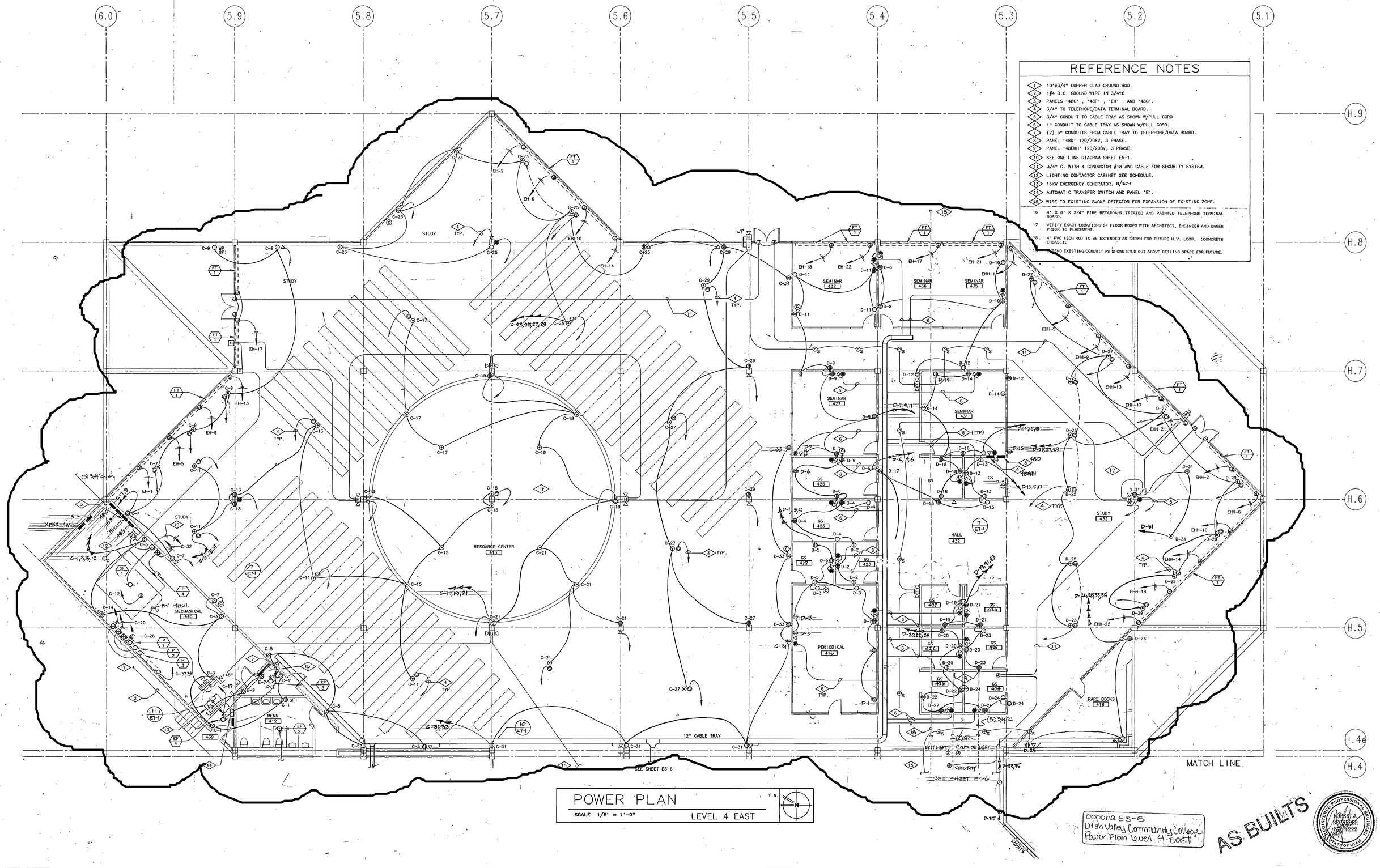

REFERENCE NOTES

1. 10'x3/4" COPPER CLAD GROUND ROD.
2. 1#4 B.C. GROUND WIRE IN 3/4"C.
3. PANELS '48C' , '48F' , 'EH' , AND '48G'.
4. 3/4" TO TELEPHONE/DATA TERMINAL BOARD.
5. 3/4" CONDUIT TO CABLE TRAY AS SHOWN W/PULL CORD.
6. 1" CONDUIT TO CABLE TRAY AS SHOWN W/PULL CORD.
7. (2) 3" CONDUITS FROM CABLE TRAY TO TELEPHONE/DATA BOARD.
8. PANEL '48D' 120/208V, 3 PHASE.
9. PANEL '48EHH' 120/208V, 3 PHASE.
10. SEE ONE LINE DIAGRAM SHEET E5-1.
11. 3/4" C. WITH 4 CONDUCTOR #18 AWG CABLE FOR SECURITY SYSTEM.
12. LIGHTING CONTACTOR CABINET SEE SCHEDULE.
13. 15KW EMERGENCY GENERATOR. 11/E7-1
14. AUTOMATIC TRANSFER SWITCH AND PANEL 'E'.
15. WIRE TO EXISTING SMOKE DETECTOR FOR EXPANSION OF EXISTING ZONE.
16. 4' X 8' X 3/4" FIRE RETARDANT, TREATED AND PAINTED TELEPHONE TERMINAL BOARD.
17. VERIFY EXACT LOCATIONS OF FLOOR BOXES WITH ARCHITECT, ENGINEER AND OWNER PRIOR TO PLACEMENT.
18. 4" PVC (SCH 40) TO BE EXTENDED AS SHOWN FOR FUTURE H.V. LOOP. (CONCRETE ENCASE).
19. EXTEND EXISTING CONDUIT AS SHOWN STUB OUT ABOVE CEILING SPACE FOR FUTURE.

POWER PLAN

SCALE 1/8" = 1'-0"

LEVEL 4 EAST

T.N.

0000AQ E3-5
Utah Valley Community College
Power Plan Level 4 East

AS BUILTS

REGISTERED PROFESSIONAL ENGINEER
ROBERT J. BECHERER
No. 4222
STATE OF UTAH

UTAH VALLEY COMMUNITY COLLEGE LEARNING RESOURCE CENTER/LIBRARY ADDITION

STRUCTURAL ENGINEER	: Bsumek Mu and Associates
MECHANICAL ENGINEER	: VanBoerum and Frank
ELECTRICAL ENGINEER	: Becherer Nielson and Associates
LANDSCAPE ARCHITECT	: MGB and Associates
INTERIOR DESIGNER	: Don Harward

DRAWN BY: BHA
CHECKED BY: RKR

Scott, Louie and Browning
architects, engineers, planners
4766 Holladay Boulevard, Salt Lake City, Utah 84117

Utah Valley Community College
Learning Resource Center/Library Addition
Orem, Utah DFCM Project No. RV:90-014

E3-5
FEB. 18, 1991

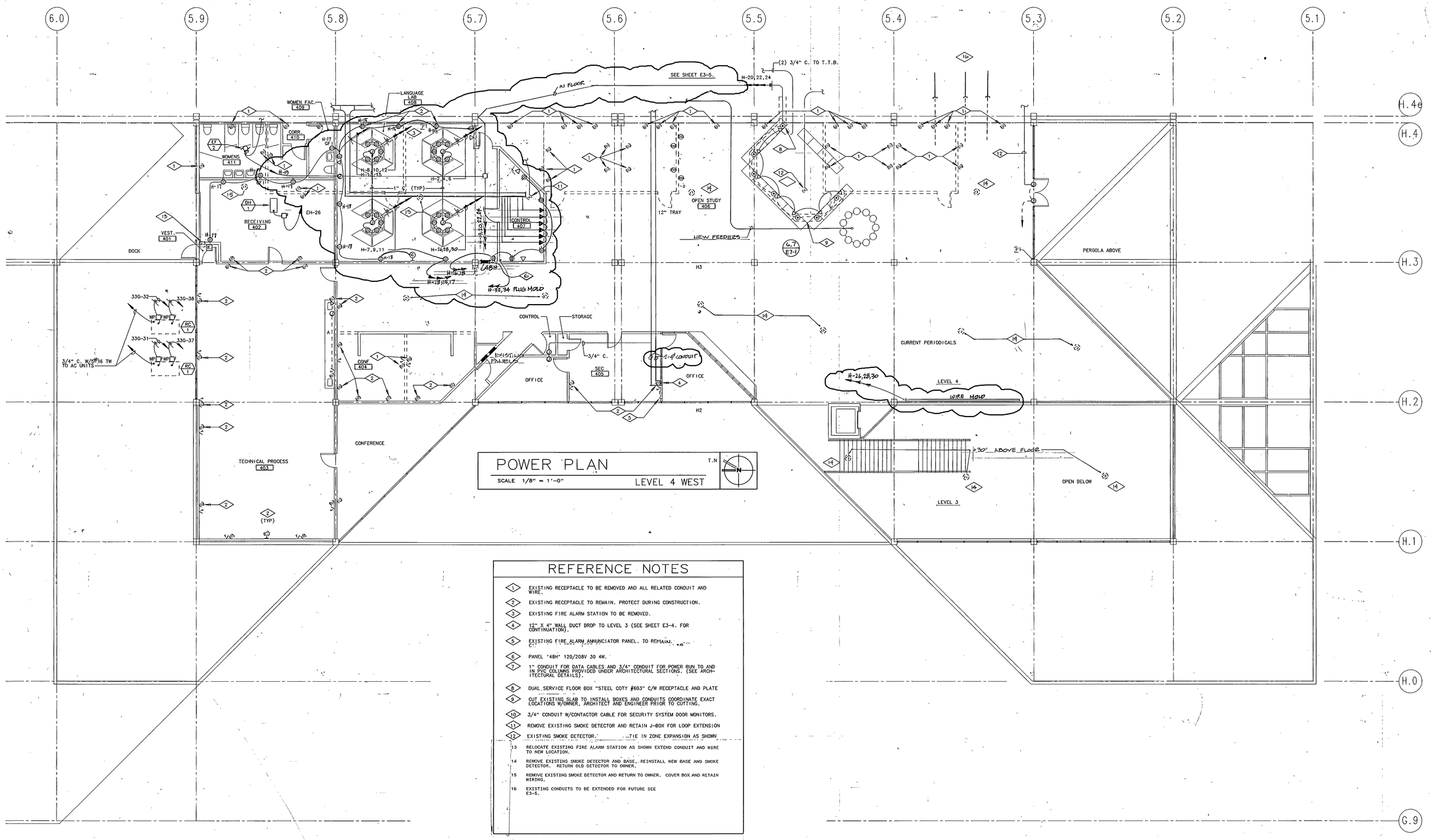

POWER PLAN

SCALE 1/8" = 1'-0"

LEVEL 4 WEST

REFERENCE NOTES

1. EXISTING RECEPTACLE TO BE REMOVED AND ALL RELATED CONDUIT AND WIRE.
2. EXISTING RECEPTACLE TO REMAIN. PROTECT DURING CONSTRUCTION.
3. EXISTING FIRE ALARM STATION TO BE REMOVED.
4. 12" X 4" WALL DUCT DROP TO LEVEL 3 (SEE SHEET E3-4. FOR CONTINUATION).
5. EXISTING FIRE ALARM ANNUNCIATOR PANEL. TO REMAIN.
6. PANEL '48H' 120/208V 30 4W.
7. 1" CONDUIT FOR DATA CABLES AND 3/4" CONDUIT FOR POWER RUN TO AND IN PVC COLUMNS PROVIDED UNDER ARCHITECTURAL SECTIONS. (SEE ARCHITECTURAL DETAILS).
8. DUAL SERVICE FLOOR BOX "STEEL COTY #603" C/W RECEPTACLE AND PLATE
9. CUT EXISTING SLAB TO INSTALL BOXES AND CONDUITS COORDINATE EXACT LOCATIONS W/OWNER, ARCHITECT AND ENGINEER PRIOR TO CUTTING.
10. 3/4" CONDUIT W/CONTACTOR CABLE FOR SECURITY SYSTEM DOOR MONITORS.
11. REMOVE EXISTING SMOKE DETECTOR AND RETAIN J-BOX FOR LOOP EXTENSION
12. EXISTING SMOKE DETECTOR. TIE IN ZONE EXPANSION AS SHOWN
13. RELOCATE EXISTING FIRE ALARM STATION AS SHOWN EXTEND CONDUIT AND WIRE TO NEW LOCATION.
14. REMOVE EXISTING SMOKE DETECTOR AND BASE. REINSTALL NEW BASE AND SMOKE DETECTOR. RETURN OLD DETECTOR TO OWNER.
15. REMOVE EXISTING SMOKE DETECTOR AND RETURN TO OWNER. COVER BOX AND RETAIN WIRING.
16. EXISTING CONDUITS TO BE EXTENDED FOR FUTURE SEE E3-5.

0000AQ E3-6
Utah Valley Community College
Power Plan level 4 West

AS BUILTS

REGISTERED PROFESSIONAL ENGINEER
ROBERT J. BECHERER
No. 4222
STATE OF UTAH

UTAH VALLEY COMMUNITY COLLEGE LEARNING RESOURCE CENTER/LIBRARY ADDITION

STRUCTURAL ENGINEER	: Bsumek Mu and Associates
MECHANICAL ENGINEER	: VanBoerum and Frank
ELECTRICAL ENGINEER	: Becherer Nielson and Associates
LANDSCAPE ARCHITECT	: MGB and Associates
INTERIOR DESIGNER	: Don Harward

DRAWN BY: BHA
CHECKED BY: RKR

Scott, Louie and Browning
architects, engineers, planners
4766 Holladay Boulevard, Salt Lake City, Utah 84117

Utah Valley Community College
Learning Resource Center/Library Addition

Orem, Utah DFCM Project No. RV:90-014

E3-6
FEB. 18, 1991

CONDUCTOR & CONDUIT SCHEDULE

TYPE	AMP	COND SIZE	CONDUCTOR QUAN	CONDUCTOR SIZE	INSUL-ATION	GND COND *
20	30	3/4	2	10	THHN THWN	10
30			3			
40			4			
28	40		2	8		
38			3			
48			4			
26	55		2	6		8
36			3			
46		1	4			
24	70	3/4	2	4		
34		1	3			
44		1 1/4	4			
32	95		3	2		6
42			4			
31	110		3	1		
41		1 1/2	4			
31X	150		3	1/0		
41X			4			
32X	175		3	2/0		
42X		2	4			
33X	200		3	3/0		
43X			4			
34X	230		3	4/0		4
44X		2 1/2	4			
325	255	2	3	250		
425		2 1/2	4			
335	310		3	350		3
435		3	4			
340	335		3	400		
440			4			
350	380	3 1/2	3	500	XHHW	
450			4			

* IN PARALLEL RUNS, SIZE GND COND IN ACCORDANCE W/ NEC PARA 250-95

7/18/90

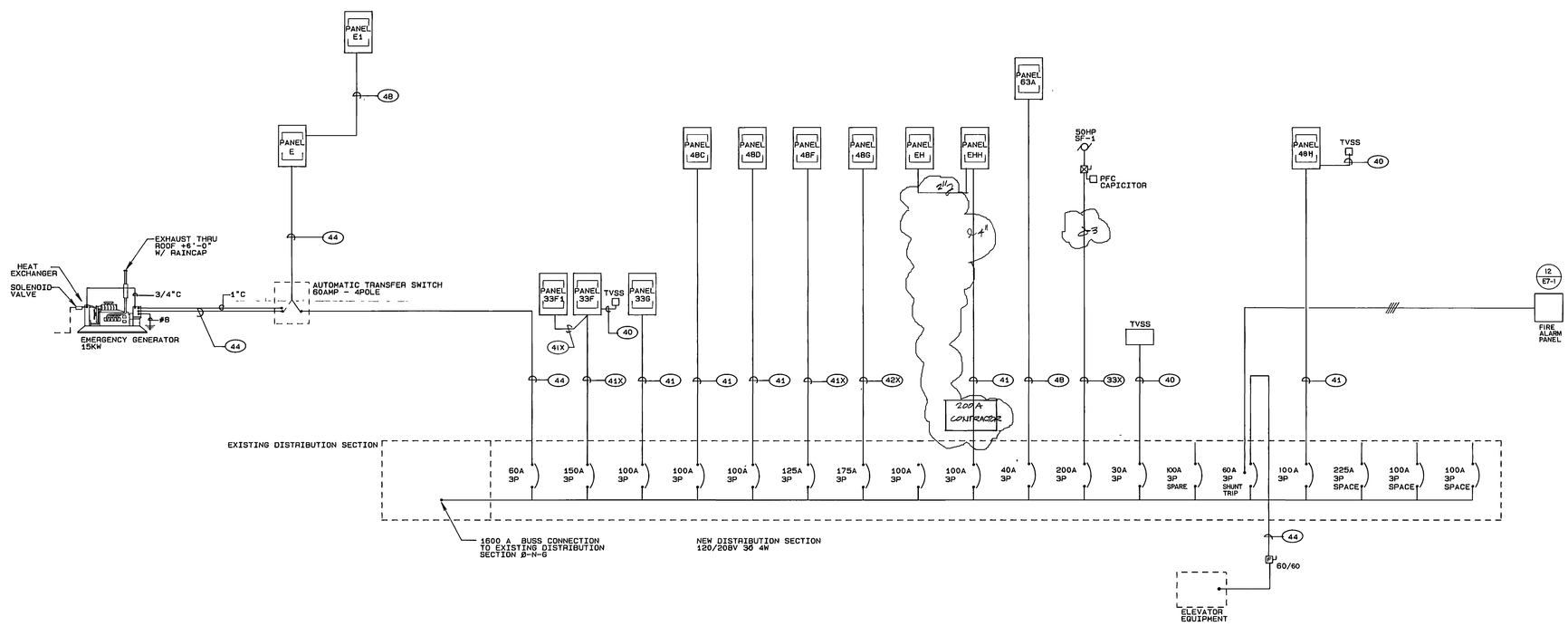

ONE-LINE DIAGRAM SCHEMATIC

0000AQ E5-1
UTAH Valley Community College
One line Diagram Schematic

AS BUILTS

REGISTERED PROFESSIONAL ENGINEER ROBERT J BOWTHAM 156222 STATE OF UTAH

UTAH VALLEY COMMUNITY COLLEGE LEARNING RESOURCE CENTER/LIBRARY ADDITION

STRUCTURAL ENGINEER	: Bsumek Mu and Associates
MECHANICAL ENGINEER	: VanBoerum and Frank
ELECTRICAL ENGINEER	: Becherer Nielson and Associates
LANDSCAPE ARCHITECT	: MGB and Associates
INTERIOR DESIGNER	: Don Harward

DRAWN BY: BHA
CHECKED BY: RKR

Scott, Louie and Browning
architects, engineers, planners
4766 Holladay Boulevard, Salt Lake City Utah 84117

Utah Valley Community College
Learning Resource Center/Library Addition
Orem, Utah DFCM Project No. RV:90-014

E5-1
FEB. 18, 1991

PANELBOARD SCHEDULE

PANEL "33F1" TYPE AQ 120/208 VOLTS 3 Ø 4 W
MOUNTING ☐ FLUSH ■ SURFACE DIMENSIONS 20 W 6 D 35 H LOCATION SERV. 320 225 AMP. MAINS ■ LUGS ☐ BREAKER

BRANCH BREAKERS

ITEM	AMPS	POLE	WIRE SIZE	CIR. NO.	LEFT A	LEFT B	LEFT C	RIGHT A	RIGHT B	RIGHT C	CIR. NO.	AMPS	POLE	WIRE SIZE	ITEM
RECEPTACLES	20	1	12	1	1200			1200			2	20	1	12	RECEPTACLES
				3		1200			1200		4				
				5			1200			1200	6				
				7	1200			1200			8				
				9		1200			1200		10				
				11			1200			1200	12				
				13	1200			1200			14				
				15		1200			1200		16				
				17			1200			1200	18				
				19	1200			1000			20				EQUIPMENT
				21		1200			1000		22				
EQUIPMENT				23			1000			1000	24				
				25	1000						26				SPARE
				27		1000					28				
SPARE				29							30				
				31							32				
				33							34				
				35							36				
				37							38				
				39							40				
				41							42				
					5800	5800	4600	4600	4600	4600					
				TOTAL	10400	10400	9400								
				AMPS. / PHASE	87	87	78								

FEEDER: ☐ TOP ■ BOTTOM
TOTAL CONNECTED LOAD 30,200
CONDUIT SIZE 1-1/2" WIRE SIZE #1/0 EQUIPMENT RATING 10,000 AMPS RMS SYM.

PANELBOARD SCHEDULE

PANEL 33F TYPE AQ 120/208 VOLTS 3 Ø 4 W
MOUNTING ☐ FLUSH ☐ SURFACE DIMENSIONS 20 W 6 D 35 H LOCATION '320 225 AMP. MAINS ■ LUGS ☐ BREAKER

BRANCH BREAKERS DOUBLE LUGS

ITEM	AMPS	POLE	WIRE SIZE	CIR. NO.	LEFT A	LEFT B	LEFT C	RIGHT A	RIGHT B	RIGHT C	CIR. NO.	AMPS	POLE	WIRE SIZE	ITEM
RECEPTACLES	20	1	12	1	800			800			2	20	1	12	RECEPTACLES
				3		800			800		4				
				5			800			800	6				
				7	800			800			8				
				9		800			800		10				
				11			800			800	12				
				13	800			800			14				
LIGHTING				15		1000			800		16				
				17			1000			800	18				
				19	1000			800			20				
				21		1000			800		22				
				23			1000			800	24				
				25	1000			800			26				
				27		1800			800		28				
				29			1200			800	30				
SECURITY GATES				31	580			800			32				
" "				33		500			800		34				
SPARE				35			-			400	36				MOTORIZED SCR
				37	-			~		~	38	30	3	10	T.V.S.S.
				39		-			~		40	-	-	-	-
				41			-			~	42	-	-	-	-
					4400	5400	4800	4800	4800	5200					
				TOTAL	9200	10200	10000								
				AMPS. / PHASE	77	85	83								

FEEDER: ■ TOP ☐ BOTTOM
TOTAL CONNECTED LOAD 29,600
CONDUIT SIZE 1-1/2" WIRE SIZE 1/0 EQUIPMENT RATING 10,000 AMPS RMS SYM.

[PANEL EXTENSIONS FROM FLOOR TO +10'-6"]

PANELBOARD SCHEDULE

PANEL "33G" TYPE AQ 120/208 VOLTS 3 Ø 4 W
MOUNTING ☐ FLUSH ■ SURFACE DIMENSIONS 20 W 6 D 35 H LOCATION EDIT 308 125 AMP. MAINS ■ LUGS ☐ BREAKER

BRANCH BREAKERS

ITEM	AMPS	POLE	WIRE SIZE	CIR. NO.	LEFT A	LEFT B	LEFT C	RIGHT A	RIGHT B	RIGHT C	CIR. NO.	AMPS	POLE	WIRE SIZE	ITEM
RECEPTACLES	20	1	12	1	1000			400			2	20	1	12	RECEPTACLES
				3		1000			800		4				
				5			1000			800	6				
				7	600			600			8				
				9		1000			800		10				
				11			1000			1200	12				LIGHTING
-				13	1000			1500			14				
DOORS				15		1000			1500		16		3		
SPARE				17			-			1500	18	-	-		-
				19	-			1500			20	-	-		-
				21		-			-		22	20	1		SPARE
				23			-			-	24				
AC-1	20	3	12	25	475			475			26	20	3	12	AC-1
	-	-	-	27		475			475		28	-	-	-	
	-	-	-	29			475			475	30	-	-	-	
RC-1	20	3	12	31	475			375			32	20	3	12	RC-1
	-	-	-	33		475			375		34	-	-	-	
	-	-	-	35			475			375	36	-	-	-	
RC-1	20	3	12	37	475			375			38	20	3	12	RC-1
	-	-	-	39		475			375		40	-	-	-	
	-	-	-	41			475			375	42	-	-	-	
					4025	3425	3425	5425	4525	4925					
				TOTAL	9450	7950	8350								
				AMPS. / PHASE	79	66	70								

FEEDER: ■ TOP ☐ BOTTOM
TOTAL CONNECTED LOAD 25,750
CONDUIT SIZE 1-1/2" WIRE SIZE #1 EQUIPMENT RATING 10,000 AMPS RMS SYM.

[PANEL EXTENSIONS FROM FLOOR TO +10'-6"]

PANELBOARD SCHEDULE

PANEL "48C" TYPE A 120/208 VOLTS 3 Ø 4 W
MOUNTING ☐ FLUSH ■ SURFACE DIMENSIONS 20 W 6 D 35 H LOCATION ELECT. 438 225 AMP. MAINS ■ LUGS ☐ BREAKER

BRANCH BREAKERS

ITEM	AMPS	POLE	WIRE SIZE	CIR. NO.	LEFT A	LEFT B	LEFT C	RIGHT A	RIGHT B	RIGHT C	CIR. NO.	AMPS	POLE	WIRE SIZE	ITEM
RECEPTACLES	20	1	12	1	600			1000			2	20	1	10	AREA LTG
" MECHANICAL RM				3		600			1400		4			10	BLDG LTG
" RESOURCE CENTER				5			600			1700	6			12	LIGHTING (MECH)
				7	800			600			8				" "
				9		1000			500		10				RECPT. RESOURCE CENTER
				11			800			500	12				MISC. FAN EQ SF1
				13	800			900			14	20	3	12	PUMP
				15		800			900		16	-	-		P-1 2HP
				17			600			900	18	-	-		-
				19	800			900			20	20	3	12	PUMP
				21		1000			900		22	-	-		P2 2HP
				23			800			900	24	-	-		-
				25	800			2000			26	40	3	10	PUMP
				27		600			2000		28	-	-	-	P-3 5HP
				29			800			2000	30	-	-	-	
				31	1000			400			32	15	3	12	
				33		1000			400		34	-	-	-	SPARE
SPARE				35			600			400	36	-	-	-	
HVAC FAN.				37							38	50	3		SPARE
HVAC FAN.				39							40	-	-	-	
SPARE				41							42	-	-	-	
					48000	5000	3600	5800	5600	5400					
				TOTAL	10600	10600	9000								
				AMPS. / PHASE	90	90	75								

FEEDER: ■ TOP ☐ BOTTOM
TOTAL CONNECTED LOAD 3[illegible],800
CONDUIT SIZE 1-1/2" WIRE SIZE #1/0 EQUIPMENT RATING 10,000 AMPS RMS SYM.

PANELBOARD SCHEDULE

PANEL "48D" TYPE AQ 120/208 VOLTS 3 Ø 4 W
MOUNTING ■ FLUSH ☐ SURFACE DIMENSIONS 20" W 6" D 35" H LOCATION HALL 432 225 AMP. MAINS ■ LUGS ☐ BREAKER

BRANCH BREAKERS

ITEM	AMPS	POLE	WIRE SIZE	CIR. NO.	LEFT A	LEFT B	LEFT C	RIGHT A	RIGHT B	RIGHT C	CIR. NO.	AMPS	POLE	WIRE SIZE	ITEM
RECEPTACLES-RM 413	20	1	12	1	1000			800			2	20	1	12	RECEPTACLES-RM 414
RM 413				3		1000			1000		4				RM 415
RM 412				5			800			1000	6				RM 418
				7	800			1000			8				RM 419
RM 417				9		800			1000		10				RM 419
RM 418				11			1000			1000	12				HALL
RM 417				13	800			800			14				RM 420
RM 428				15		800			660		16				RM 420
HALL				17			600			800	18				RM 421
RM. 427				19	800			800			20				RM 422
RM. 426				21		800			800		22				RM 423
RM 425				23			800			800	24				
STUDY				25	800			800			26				
"				27		800			800		28				
"				29			800				30				SPARE
"				31	600			-			32				
FLOOR BOXES				33		-			-		34				
LIGHTS BOOKCASE				35			-			-	36				
SPARE				37	-			-			38				
				39		-			-		40				
				41			-			-	42				
					4800	4200	4000	4200	4200	3600					
				TOTAL	9000	9400	7600								
				AMPS. / PHASE	75	78	63								

FEEDER: ■ TOP ☐ BOTTOM
TOTAL CONNECTED LOAD 26000
72.2
CONDUIT SIZE 1-1/2" WIRE SIZE 1/0 EQUIPMENT RATING 10,000 AMPS RMS SYM.

PANELBOARD SCHEDULE

PANEL "48F" TYPE A 120/208 VOLTS 3 Ø 4 W
MOUNTING ☐ FLUSH ■ SURFACE DIMENSIONS 20" W 6" D 35" H LOCATION ELECT. 438 225 AMP. MAINS ■ LUGS ☐ BREAKER

BRANCH BREAKERS

ITEM	AMPS	POLE	WIRE SIZE	CIR. NO.	LEFT A	LEFT B	LEFT C	RIGHT A	RIGHT B	RIGHT C	CIR. NO.	AMPS	POLE	WIRE SIZE	ITEM
LIGHTING	20	1	12	1	1000			1000			2	20	1	12	LIGHTING
				3		1050			1050		4				
				5			1000			1000	6				
				7	1000			1050			8				
				9		1050			1000		10				
				11			1000			1050	12				
				13	1000			1000			14				
				15		1050			1300		16				
				17			1050			1300	18				
				19	1000			1000			20				
				21		1050			1050		22				
				23			1000			1000	24				
				25	1050			1250			26				
				27		1050			1650		28				
				29			1000			1000	30				
				31	1050			1000			32				
				33		1050					34				SPARE
				35			1000				36				LIGHTING
				37	1050						38				LIGHTING CONTRACTOR
SPARE				39							40				SPARE
				41							42				SPARE
					7150	6300	6050	6300	6500	6350					
				TOTAL	13450	12800	12400								
				AMPS. / PHASE	112	107	103								

FEEDER: ■ TOP ☐ BOTTOM
TOTAL CONNECTED LOAD 38,650
CONDUIT SIZE 2" WIRE SIZE #1/0 EQUIPMENT RATING 10,000 AMPS RMS SYM.

PANELBOARD SCHEDULE

PANEL "48G" TYPE A 120/208 VOLTS 3 Ø 4 W
MOUNTING ☐ FLUSH ■ SURFACE DIMENSIONS 20 W 6 D 35 H LOCATION ELECT. 438 225 AMP. MAINS ■ LUGS ☐ BREAKER

BRANCH BREAKERS

ITEM	AMPS	POLE	WIRE SIZE	CIR. NO.	LEFT A	LEFT B	LEFT C	RIGHT A	RIGHT B	RIGHT C	CIR. NO.	AMPS	POLE	WIRE SIZE	ITEM
LIGHTING-RESOURCE CNT.	20	1	12	1	1000			1700			2	20	1	12	LIGHTING-RESOURCE CENTER
				3		1000			900		4				
				5			1000			1200	6				
				7	1000			1400			8				
				9		1000			750		10				
				11			1000			1400	12				
				13	550			1750			14				
				15		1500			1750		16				
				17			1750			1800	18				
				19	1750			800			20				
				21		1750			1500		22				
				23			1500			1350	24				
				25	1500			1500			26				
				27		1350			900		28				
				29			1750			1000	30				
				31	1750			1000			32				
				33		1400			1000		34				
				35			1750			1000	36				
				37	1750			1000			38				
				39		1750			1000		40				
				41			1000			1000	42				
					9300	10250	9750	9150	7800	8750					
				TOTAL	18950	18050	18500								
				AMPS. / PHASE	154	150	154								

FEEDER: ■ TOP ☐ BOTTOM
TOTAL CONNECTED LOAD 55,000
CONDUIT SIZE 2-1/2" WIRE SIZE #4/0 EQUIPMENT RATING ______ AMPS RMS SYM.

PANELBOARD SCHEDULE

PANEL "48EH" TYPE A 120/208 VOLTS 3 Ø 4 W
MOUNTING ☐ FLUSH ■ SURFACE DIMENSIONS 20 W 6 D 50 H LOCATION ELECTRICAL 438 225 AMP. MAINS ■ LUGS ☐ BREAKER

BRANCH BREAKERS

ITEM	AMPS	POLE	WIRE SIZE	CIR. NO.	LEFT A	LEFT B	LEFT C	RIGHT A	RIGHT B	RIGHT C	CIR. NO.	AMPS	POLE	WIRE SIZE	ITEM
FIN TUBE HEATER	20	2	12	1	940			940			2	20	2	12	FIN TUBE HEATER
-	-	-		3		940			940		4	-	-		-
	20	2		5			940			940	6	20	2		
-	-	-		7	940			940			8	-	-		-
	20	2		9		940			940		10	20	2		
-	-	-		11			940			940	12	-	-		-
	20	2		13	940			940			14	20	2		
-	-	-		15		940			940		16	-	-		-
	20	2		17			940			940	18	20	2		
-	-	-		19	940			940			20	-	-		-
	20	2		21		940			940		22	20	2		
-	-	-		23			940			940	24	-	-		-
SPARE	20	2		25	-			2000			26	30	3	10	DUCT HEATER
	-	-		27		-			2000		28	-	-	-	6KW
	20	1		29			-			2000	30	-	-	-	
				31							32	20	2		SPARE
				33							34	-	-		-
				35							36	20	2		SPARE
				37							38	-	-		-
				39							40	20	2		SPARE
				41							42	-	-		-
					3760	3760	3760	5760	5760	5760					
				TOTAL	9520	9520	9520								
				AMPS. / PHASE	79	79	79								

FEEDER: ■ TOP ☐ BOTTOM
TOTAL CONNECTED LOAD 28560
79/55
CONDUIT SIZE 2" WIRE SIZE #2/0 EQUIPMENT RATING 10,000 AMPS RMS SYM.

PANELBOARD SCHEDULE

PANEL "48EHH" TYPE A 120/208 VOLTS 3 Ø 4 W
MOUNTING ■ FLUSH ☐ SURFACE DIMENSIONS 20 W 6 D 50 H LOCATION HALL 432 225 AMP. MAINS ■ LUGS ☐ BREAKER

BRANCH BREAKERS

ITEM	AMPS	POLE	WIRE SIZE	CIR. NO.	LEFT A	LEFT B	LEFT C	RIGHT A	RIGHT B	RIGHT C	CIR. NO.	AMPS	POLE	WIRE SIZE	ITEM
FIN TUBE HEATER	20	2	12	1	940			940			2	20	2	12	FIN TUBE HEATER
	-	-		3		940			940		4	-	-		-
	20	2		5			940			940	6	20	2		
	-	-		7	940			940			8	-	-		-
	20	2		9		940			940		10	20	2		
	-	-		11			940			940	12	-	-		-
	20	2		13	940			940			14	20	2		
	-	-		15		940			940		16	-	-		-
	20	2		17			940			940	18	20	2		
	-	-		19	940			940			20	-	-		-
	20	2		21		940			940		22	20	2		
	-	-		23			940			940	24	-	-		-
SPACE ONLY	20	2		25	-			-			26	30	2		SPARE
	-	-		27		-			-		28	-	-		
	20	1		29			-			-	30	20	1		
				31							32				
				33							34				
				35							36				
				37							38				
				39							40				
				41							42				
					3760	3760	3760	3760	3760	3760					
				TOTAL	7520	7520	7520								
				AMPS. / PHASE	63	63	63								

FEEDER: ■ TOP ☐ BOTTOM
TOTAL CONNECTED LOAD 22560
CONDUIT SIZE 2" WIRE SIZE #2/0 EQUIPMENT RATING 10,000 AMPS RMS SYM.

PANELBOARD SCHEDULE

PANEL '63A' TYPE ______ 120/208 VOLTS 3 Ø 4 W
MOUNTING ☐ FLUSH ■ SURFACE DIMENSIONS 20 W 6 D 20 H LOCATION LEVEL 5 100 AMP. MAINS ■ LUGS ☐ BREAKER

BRANCH BREAKERS

ITEM	AMPS	POLE	WIRE SIZE	CIR. NO.	LEFT A	LEFT B	LEFT C	RIGHT A	RIGHT B	RIGHT C	CIR. NO.	AMPS	POLE	WIRE SIZE	ITEM
LIGHTING	20	1	12	1	1760			1100			2	20	1	12	LIGHTING-ROOF
				3		1760			1600		4				
				5			1760			-	6				
PHOTOCELL				7	-			-			8				TIMECLOCK
SPARE				9		-			-		10				SPARE
				11			-			-	12				
				13							14				
				15							16				
				17							18				
				19							20				
				21							22				
				23							24				
				25							26				
				27							28				
				29							30				
				31							32				
				33							34				
				35							36				
				37							38				
				39							40				
				41							42				
					1760	1760	1100	1600							
				TOTAL	2860	3360	1760								
				AMPS. / PHASE	24	28	15								

FEEDER: ☐ TOP ■ BOTTOM
TOTAL CONNECTED LOAD 7980
CONDUIT SIZE 1" WIRE SIZE #8 EQUIPMENT RATING 10,000 AMPS RMS SYM.

PANELBOARD SCHEDULE

PANEL "E" TYPE A 120/208 VOLTS 3 Ø 4 W
MOUNTING ☐ FLUSH ■ SURFACE DIMENSIONS 20 W 6 D ___ H LOCATION MECHANICAL 448 60 AMP. MAINS ☐ LUGS ■ BREAKER

BRANCH BREAKERS

ITEM	AMPS	POLE	WIRE SIZE	CIR. NO.	LEFT A	LEFT B	LEFT C	RIGHT A	RIGHT B	RIGHT C	CIR. NO.	AMPS	POLE	WIRE SIZE	ITEM
MAIN BREAKER	30	3	8	1	2900			1100			2	20	1	10	SPACE
-	-	-	-	3		1700			1100		4				
-	-	-	-	5			1700			1400	6				
AUTOMATIC TRANSFER	20	1	12	7	500			-			8				EMER. LIGHTING
SWITCH				9		1500			-		10				
				11			-			-	12				
TELEPHONE BOARD				13	-			-			14				SPARE
JACKET HEATER				15		-			-		16				SPACE ONLY
SPACE ONLY SPARE				17			-			-	18				
				19	-			-			20				
				21		-			-		22				
				23			-			-	24				
				25							26				
				27							28				
				29							30				
				31							32				
				33							34				
				35							36				
				37							38				
				39							40				
				41							42				
					3400	3200	1200	1100	1100	1400					
				TOTAL	4500	4300	3100								
				AMPS. / PHASE	38	36	26								

FEEDER: ■ TOP ☐ BOTTOM
TOTAL CONNECTED LOAD 11,900
CONDUIT SIZE 1-1/4" WIRE SIZE #4 EQUIPMENT RATING 10,000 AMPS RMS SYM.

PANELBOARD SCHEDULE

PANEL 'E1' TYPE AQ 120/208 VOLTS 3 Ø 4 W
MOUNTING ☐ FLUSH ■ SURFACE DIMENSIONS 20 W 6 D 20 H LOCATION EXIST. ELECT. RM. 60 AMP. MAINS ■ LUGS ☐ BREAKER

BRANCH BREAKERS

ITEM	AMPS	POLE	WIRE SIZE	CIR. NO.	LEFT A	LEFT B	LEFT C	RIGHT A	RIGHT B	RIGHT C	CIR. NO.	AMPS	POLE	WIRE SIZE	ITEM
EMERGENCY LTG.	20	1	12	1	1200			500			2	20	1	12	TELEPHONE BOARD
				3		1200			500		4				SECURITY BOARD
				5			1200			500	6				FIRE ALARM
				7	1200			-			8				SPARE
				9		1200			-		10				
SPARE				11			-			-	12				
				13							14				
				15							16				
				17							18				
				19							20				
				21							22				
				23							24				
				25							26				
				27							28				
				29							30				
				31							32				
				33							34				
				35							36				
				37							38				
				39							40				
				41							42				
					2400	2400	1200	500	500	500					
				TOTAL	2900	2900	1700								
				AMPS. / PHASE	24	24	14								

FEEDER: ■ TOP ☐ BOTTOM
TOTAL CONNECTED LOAD 7500
CONDUIT SIZE 1" WIRE SIZE #8 EQUIPMENT RATING 10,000 AMPS RMS SYM.

PANELBOARD SCHEDULE

PANEL "48H" TYPE AQ 120/208 VOLTS 3 Ø 4 W
MOUNTING ■ FLUSH ☐ SURFACE DIMENSIONS 20 W 6 D 35 H LOCATION LANG. LAB. 408 225 AMP. MAINS ■ LUGS ☐ BREAKER

BRANCH BREAKERS

ITEM	AMPS	POLE	WIRE SIZE	CIR. NO.	LEFT A	LEFT B	LEFT C	RIGHT A	RIGHT B	RIGHT C	CIR. NO.	AMPS	POLE	WIRE SIZE	ITEM
TVS	20	1	12	1	1000			1000			2	20	1	12	RECEPTACLE-RM 410
				3		1000			1000		4				RM 410
				5			1000			1000	6				RM 410
RECEPTACLES RM 410				7	1000			1000			8				RM 410
				9		1000			1000		10				RM 410
				11			1000			1000	12				RM 410
				13	1000			1000			14				SPARE
				15		1000			1000		16				RECEPTACLE-RM 410A
				17			500			1000	18				RM 410A
EXHAUST FANS				19							20				OPEN STUDY
SPARE				21							22				OPEN STUDY
				23							24				OPEN STUDY
SPACE ONLY				25							26				RM 410
				27							28				RM 410
				29							30				RM 410
				31							32				WIRE MOLD RM 410A
				33							34				
				35							36				SPARE
				37				100			38				
				39					100		40	-	-	-	
				41						100	42	-	-	-	
					3000	3000	2500	3100	3100	3100					
				TOTAL	6100	6100	5600								
				AMPS. / PHASE	51	51	47								

FEEDER: ■ TOP ☐ BOTTOM
TOTAL CONNECTED LOAD 17,800
CONDUIT SIZE 1-1/2" WIRE SIZE #1 EQUIPMENT RATING 10,000 AMPS RMS SYM.

0000AQ E6-1
Utah Valley Community College
Panel Schedules

AS BUILTS

REGISTERED PROFESSIONAL ENGINEER
ROBERT J. BECHERER
No. 4222
STATE OF UTAH

UTAH VALLEY COMMUNITY COLLEGE LEARNING RESOURCE CENTER/LIBRARY ADDITION

PANEL SCHEDULES

STRUCTURAL ENGINEER : Bsumek Mu and Associates
MECHANICAL ENGINEER : VanBoerum and Frank
ELECTRICAL ENGINEER : Becherer Nielson and Associates
LANDSCAPE ARCHITECT : MGB and Associates
INTERIOR DESIGNER : Don Harward

DRAWN BY: BNA
CHECKED BY: RKR

Scott, Louie and Browning
architects, engineers, planners

Utah Valley Community College
Learning Resource Center/Library Addition
Orem, Utah DFCM Project No. RV:90-014

E6-1
FEB. 18, 1991

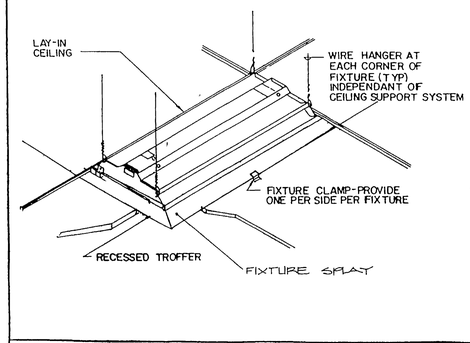

DETAIL 1 / E7-1
TYP. RECESSED FIXTURE MOUNTING

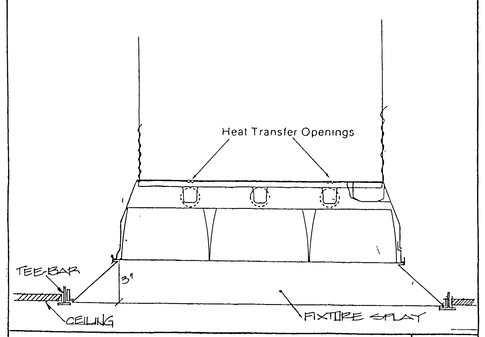

DETAIL 2 / E7-1
TYPICAL RECESSED FIXTURE

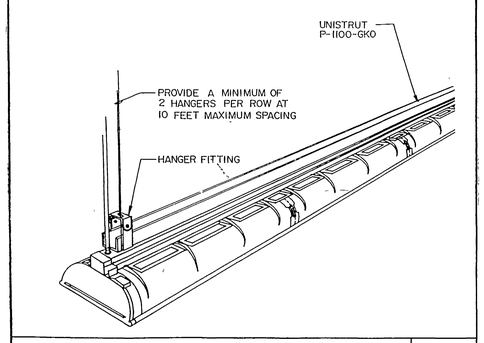

DETAIL 3 / E7-1
FIXTURE (TYPICAL)

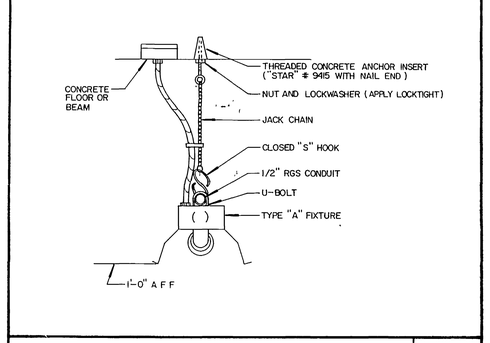

DETAIL 4 / E7-1
FIXTURE "A" (TYPICAL)

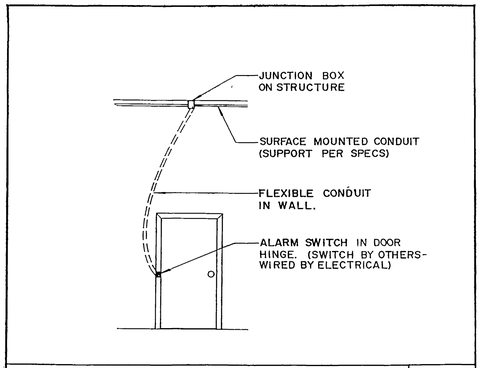

DETAIL 5 / E7-1
SECURITY SYSTEM DOOR SWITCH

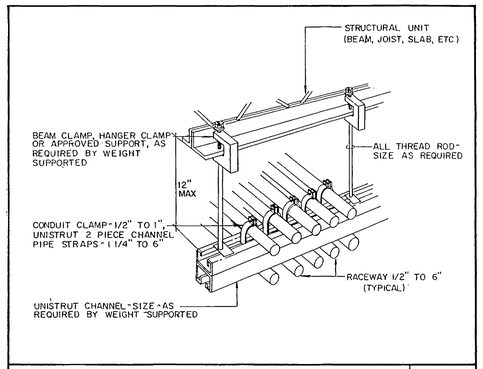

TYPICAL CONDUIT RACK DETAIL 6 / E7-1

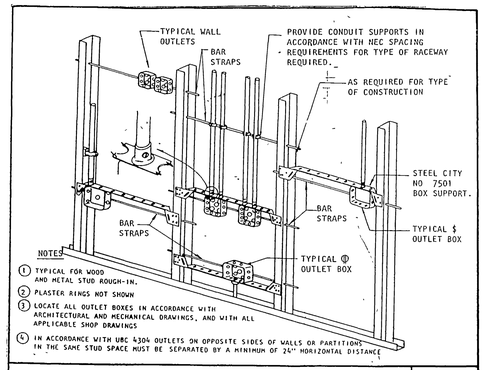

TYPICAL ROUGH-IN REQUIREMENTS DETAIL 7 / E7-1

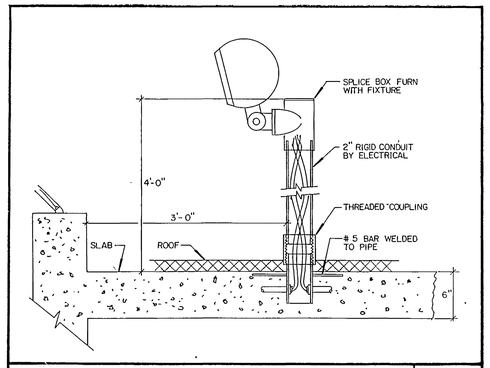

DETAIL 8 / E7-1
FIXTURE TYPE "S" MOUNTING

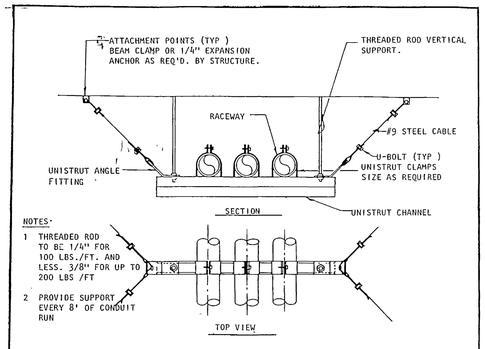

DETAIL 9 / E7-1
MULTIPLE RACEWAY SUPPORT

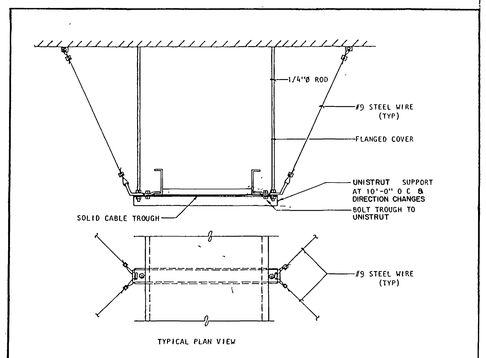

DETAIL 10 / E7-1
SUPPORT FOR CABLE TROUGH

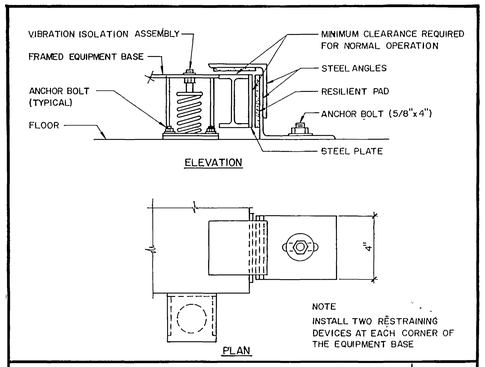

GENERATOR RESTRAINT DETAIL 11 / E7-1

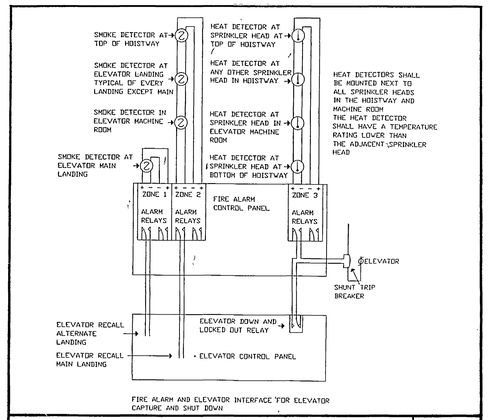

DETAIL 12 / E7-1
FIRE ALARM WIRING / ELEVATOR

Utah Valley Community College
Electrical Details
AS BUILTS

ROBERT J. BENSHAR
No. 4222
STATE OF UTAH
REGISTERED PROFESSIONAL ENGINEER

UTAH VALLEY COMMUNITY COLLEGE LEARNING RESOURCE CENTER/LIBRARY ADDITION

ELECTRICAL DETAILS

STRUCTURAL ENGINEER	: Bsumek Mu and Associates
MECHANICAL ENGINEER	: VanBoerum and Frank
ELECTRICAL ENGINEER	: Becherer Nielson and Associates
LANDSCAPE ARCHITECT	: MGB and Associates
INTERIOR DESIGNER	: Don Harward

DRAWN BY: BNA
CHECKED BY: RKB

Scott, Louie and Browning
architects, engineers, planners
4766 Holladay Boulevard Salt Lake City, Utah 84117

Utah Valley Community College
Learning Resource Center/Library Addition
Orem, Utah DFCM Project No. RV-90-014

E7-1
FEB. 18, 1991