SOUTHERN UTAH UNIVERSITY
CONCRETE SETTLEMENT & WATER DAMAGE
LIBRARY, CENTRUM, ENGINEERING TECHNOLOGY
DFCM PROJECT NO. 07166730

VICINITY MAP

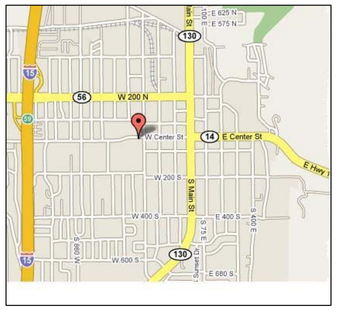

CEDAR CITY, UTAH 84720

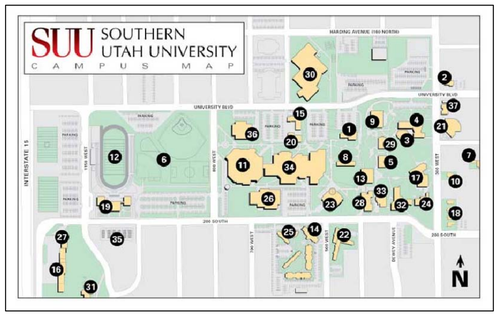

State of Utah–Department of Administrative Services

DIVISION OF FACILITIES CONSTRUCTION AND MANAGEMENT

4110 State Office Building/Salt Lake City, Utah 84114/538–3018

APPROVAL

Southern Utah University — DATE

DFCM — DATE

STRUCTURAL ENGINEER

DM Associates, INC.
510 S. Main, Ste. B9
Cedar City, UT 84720

Contact:
Dana A. Meier (435) 867-4242

SCHEDULE OF DRAWINGS

CIVIL	ARCHITECTURAL	STRUCTURAL	MECHANICAL	PLUMBING	ELECTRICAL
		BASE BID			
		GERALD R. SHERRATT LIBRARY			
		S-1 LIBRARY DEMOLITION PLAN			
		S-2 LIBRARY REPAIR PLAN			
		ALTERNATE BID 1			
		ENGINEERING TECHNOLOGY			
		S-5 TECHNOLOGY BUILDING DEMOLITION PLAN			
		S-6 TECHNOLOGY BUILDING REPAIR PLAN			
		ALTERNATE BID 2			
		CENTRUM / SHARWAN SMITH CENTER			
		S-3 STUDENT CENTER / CENTRUM DEMOLITION PLAN			
		S-4 STUDENT CENTER/ CENTRUM REPAIR PLAN			
		ALTERNATE BID 3			
		S-7 TECHNOLOGY BUILDING REPAIR PLAN			
		PROJECT DETAILS			
		S-8 PROJECT DETAILS			
		S-9 PROJECT DETAILS			

EXISTING STORM MANHOLE

EXISTING BIKE RACKS

8.5'

SAW CUT CONTROL JOINT FOR CLEAN SLAB REMOVAL

REMOVE BRICK & CONCRETE & EXCAVATE 4' FROM TOP OF BRICK (AS PER SOILS REPORT)

TOP OF FOUNDATION

EXISITING SEWER MANHOLE

REMOVE EXISTING LAWN

TREE NOT TO BE DESTURBED

SHERRATT LIBRARY

CURB TO BE REMOVED

STEPS

REMOVE EXISTING CURB AND RAILING

EXSITING STORM DRAIN MAN HOLE

NOTES:

1. ANY TREES OR LANDSCAPE NOT IDENTIFIED FOR REMOVAL ARE NOT TO BE DISTURBED.

2. ANY LANDSCAPE THAT IS DISTURBED IS TO BE REPLACED AS ORIGINAL OR AS DESIGNED.

3. ALL NEW CONCRETE SLABS SHALL SLOPE AWAY FROM BUILDING A MIN. 2% FOR A MIN. 10'-0".

4. OBTAIN COPY OF GEOTECHNICAL REPORT PREPARED BY GEM ENGINEERING (AUG. 20, 2007 # RG628) AND FOLLOW ALL RECOMENDATIONS THERE IN.

5. REMOVE 4'-0" OF SOIL BELOW AREAS IDENTIFIED FOR CONCRETE AND BRICK REMOVAL, REPLACE SOIL AS PER GEOTECHNICAL REPORT.

REMOVE LANDSCAPING

REMOVE CURB AT 1ST JOINT

REPAIR & PATCH ASPHALT PARKING LOT AS REQUIRED.

REMOVE CURB TO FIRST JOINT (DO NOT EXCAVATE 4'-0")

REMOVE CONCRETE (DO NOT EXCAVATE 4'-0")

EXSITING CONCRETE VENT CHASE

REMOVE SOD FOR GRADING

REMOVE & REPLACE EXSTING CONCRETE APRON

20'-8"

EXISITING ELEC. BOX

REMOVE CONCRETE CURB (DO NOT EXCAVATE 4'-0")

REMOVE BRIDGE AT CURB ON 200 SOUTH. PATCH ASPHALT & CONCRETE CURB AS REQUIRED

LEGEND

- GRASS TO BE REMOVED
- CONCRETE TO BE REMOVED AND SOIL 4'-0" BELOW TOP OF CONCRETE
- BUILDING
- GRASS
- BRICK & CONCRETE SLAB UNDER BRICK TO BE REMOVED AND SOIL 4'-0" BELOW TOP OF CONCRETE
- DIRECTION OF SLOPE

LIBRARY DEMOLITION PLAN

SCALE: 3/32" = 1'-0"

0 5' 10' 20'

REVISIONS–DATE

1 2 3 4 5

DRAWN BY: MJK

CHECKED BY:

ENGINEER

ARCHITECT

DM ASSOCIATES, INC.
STRUCTURAL ENGINEERS

510 S. Main, Ste B9
Cedar City, UT 84720
Ph (435) 867-4242

4925 Pinehill Dr.
Murray, UT 84107
Ph (801) 266-8542

SOUTHERN UTAH UNIVERSITY

BASE BID FOR CONCRETE SETTLEMENT AND WATER DAMAGE

GERALD R. SHERRATT LIBRARY, CEDAR CITY UTAH 84720

DFCM# 07166730

DM# 07030

OCT. 8, 2007

SHEET: S-1

OF:

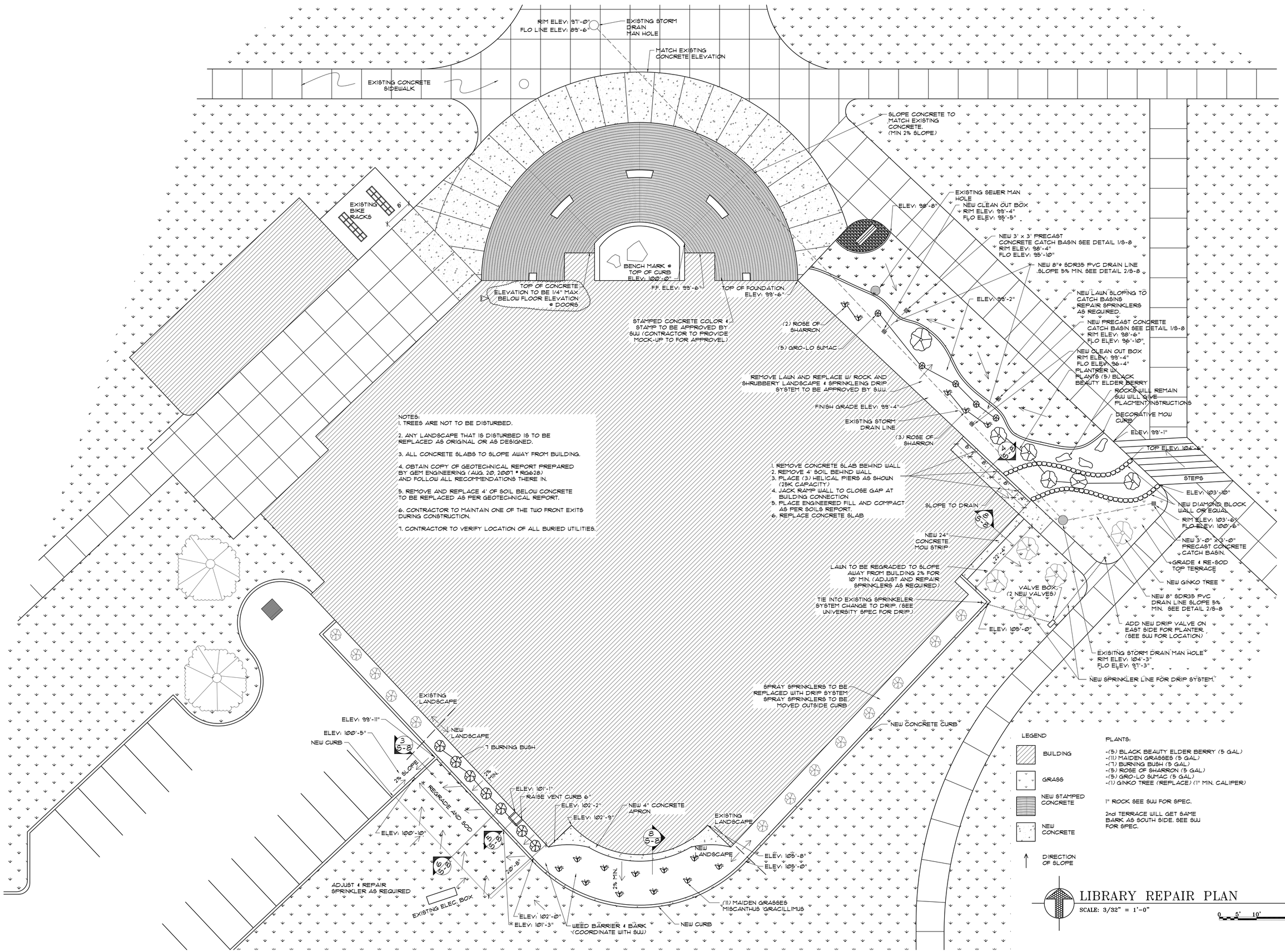

NOTES:

1. TREES ARE NOT TO BE DISTURBED.
2. ANY LANDSCAPE THAT IS DISTURBED IS TO BE REPLACED AS ORIGINAL OR AS DESIGNED.
3. ALL CONCRETE SLABS TO SLOPE AWAY FROM BUILDING.
4. OBTAIN COPY OF GEOTECHNICAL REPORT PREPARED BY GEM ENGINEERING (AUG. 20, 2001 # RG628) AND FOLLOW ALL RECOMMENDATIONS THERE IN.
5. REMOVE AND REPLACE 4' OF SOIL BELOW CONCRETE TO BE REPLACED AS PER GEOTECHNICAL REPORT.
6. CONTRACTOR TO MAINTAIN ONE OF THE TWO FRONT EXITS DURING CONSTRUCTION.
7. CONTRACTOR TO VERIFY LOCATION OF ALL BURIED UTILITIES.

REVISIONS–DATE
Dec 5, 2007
1 2 3 4 5

DRAWN BY: NWA
CHECKED BY:

ENGINEER

ARCHITECT

DM ASSOCIATES, INC.
STRUCTURAL ENGINEERS
510 S. Main, Ste B9
Cedar City, UT 84720
Ph (435) 867-4242
4925 Pinehill Dr.
Murray, UT 84107
Ph (801) 266-8542

SOUTHERN UTAH UNIVERSITY
BASE BID FOR CONCRETE SETTLEMENT AND WATER DAMAGE
GERALD R. SHERRATT LIBRARY, CEDAR CITY UTAH 84720

DFCM# 07166730
DM# 07030
OCT. 08, 2007
SHEET: S-2
OF:

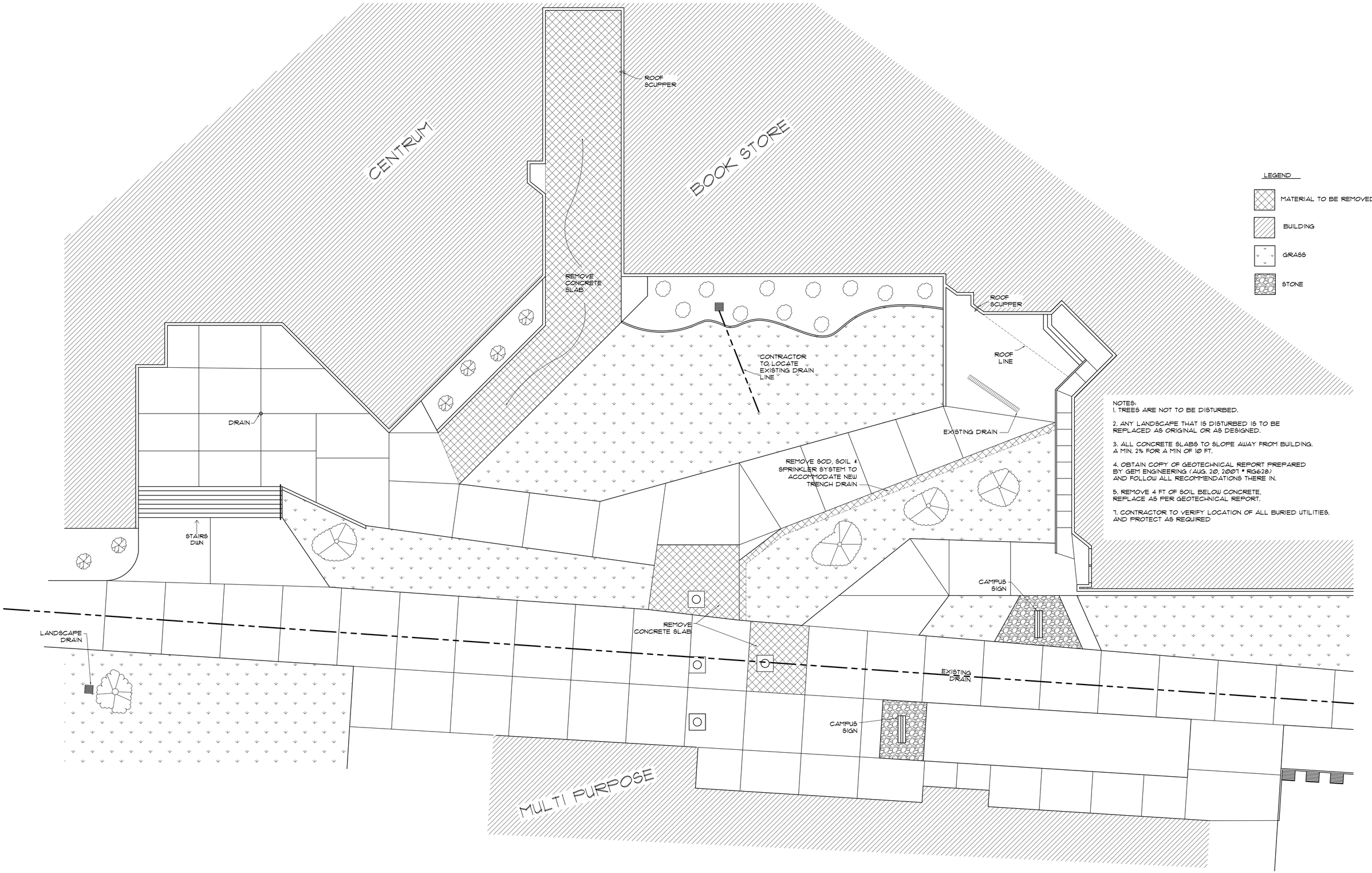

LEGEND

- MATERIAL TO BE REMOVED
- BUILDING
- GRASS
- STONE

NOTES:

1. TREES ARE NOT TO BE DISTURBED.

2. ANY LANDSCAPE THAT IS DISTURBED IS TO BE REPLACED AS ORIGINAL OR AS DESIGNED.

3. ALL CONCRETE SLABS TO SLOPE AWAY FROM BUILDING. A MIN. 2% FOR A MIN OF 10 FT.

4. OBTAIN COPY OF GEOTECHNICAL REPORT PREPARED BY GEM ENGINEERING (AUG. 20, 2007 • RG628) AND FOLLOW ALL RECOMMENDATIONS THERE IN.

5. REMOVE 4 FT OF SOIL BELOW CONCRETE, REPLACE AS PER GEOTECHNICAL REPORT.

7. CONTRACTOR TO VERIFY LOCATION OF ALL BURIED UTILITIES. AND PROTECT AS REQUIRED

STUDENT CENTER / CENTRUM DEMOLITION PLAN

SCALE: 3/32"= 1'-0"

0 5' 10' 20'

REVISIONS–DATE
1 2 3 4 5
Dec 5, 2007

DRAWN BY: MJK

CHECKED BY:

ENGINEER

ARCHITECT

DM ASSOCIATES, INC.
STRUCTURAL ENGINEERS
510 S. Main, Ste B9
Cedar City, UT 84720
Ph (435) 867-4242
4925 Pinehill Dr.
Murray, UT 84107
Ph (801) 266-8542

SOUTHERN UTAH UNIVERSITY
ALTERNATE BID 2 FOR CONCRETE SETTLEMENT AND WATER DAMAGE
STUDENT CENTER / CENTRUM, CEDAR CITY UTAH 84720

DFCM# 07166730

DM# 07030

OCT. 8, 2007

SHEET: S-3

OF:

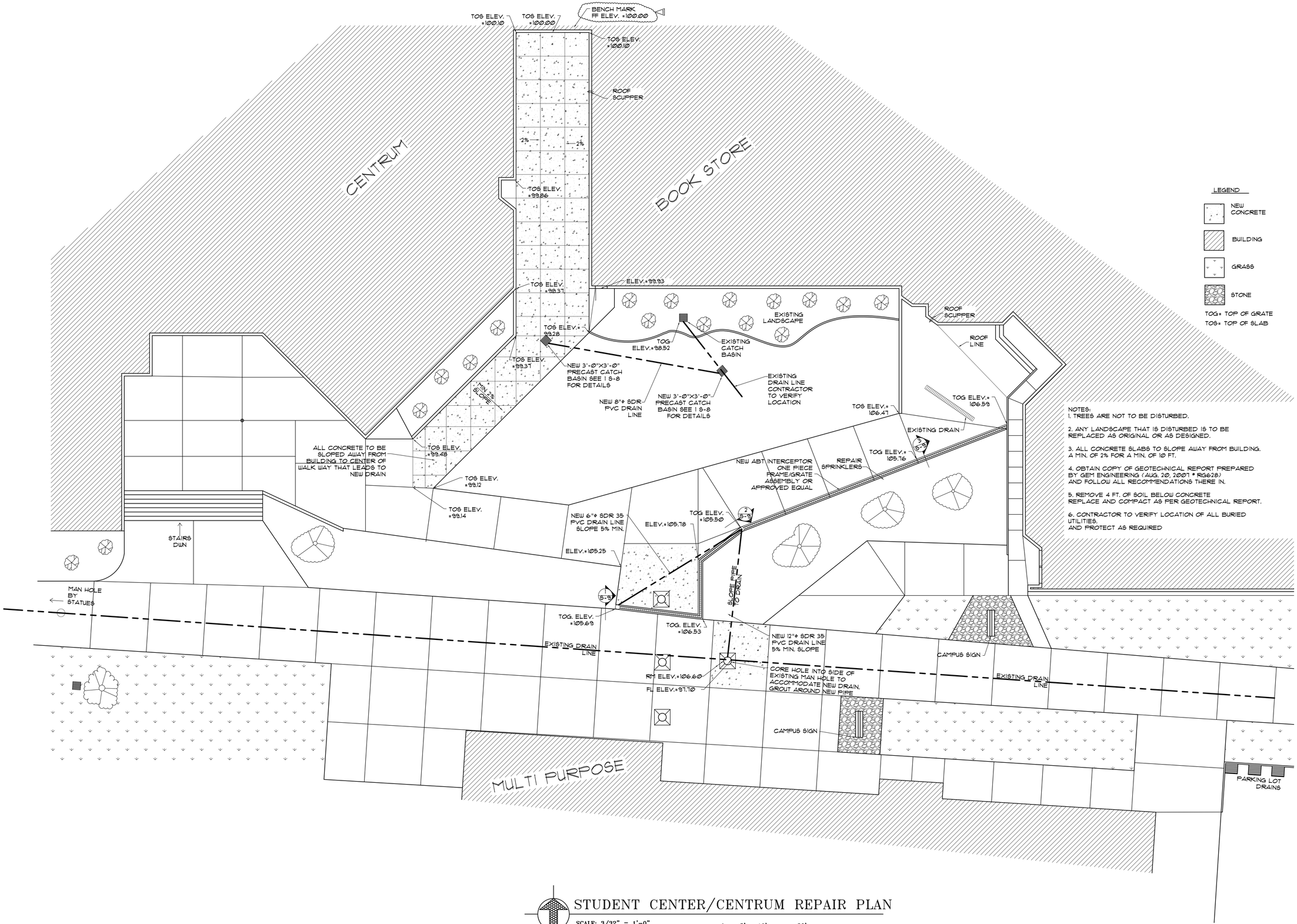

LEGEND

- NEW CONCRETE
- BUILDING
- GRASS
- STONE

TOG= TOP OF GRATE
TOS= TOP OF SLAB

NOTES:
1. TREES ARE NOT TO BE DISTURBED.

2. ANY LANDSCAPE THAT IS DISTURBED IS TO BE REPLACED AS ORIGINAL OR AS DESIGNED.

3. ALL CONCRETE SLABS TO SLOPE AWAY FROM BUILDING. A MIN. OF 2% FOR A MIN. OF 10 FT.

4. OBTAIN COPY OF GEOTECHNICAL REPORT PREPARED BY GEM ENGINEERING (AUG. 20, 2007 • RG628) AND FOLLOW ALL RECOMMENDATIONS THERE IN.

5. REMOVE 4 FT. OF SOIL BELOW CONCRETE REPLACE AND COMPACT AS PER GEOTECHNICAL REPORT.

6. CONTRACTOR TO VERIFY LOCATION OF ALL BURIED UTILITIES.
AND PROTECT AS REQUIRED

STUDENT CENTER/CENTRUM REPAIR PLAN

SCALE: 3/32" = 1'-0"

0 5' 10' 20'

REVISIONS–DATE
1– 2– 3– 4– 5–
Dec 5, 2007

DRAWN BY: MJK
CHECKED BY:

ENGINEER

ARCHITECT

DM ASSOCIATES, INC.
STRUCTURAL ENGINEERS
510 S. Main, Ste B9
Cedar City, UT 84720
Ph (435) 867-4242
4925 Pinehill Dr.
Murray, UT 84107
Ph (801) 266-8542

SOUTHERN UTAH UNIVERSITY
ALTERNATE BID 2 FOR CONCRETE SETTLEMENT AND WATER DAMAGE
STUDENT CENTER / CENTRUM, CEDAR CITY UTAH 84720

DFCM# 07166730
DM# 07030
OCT. 8, 2007
SHEET: S-4
OF:

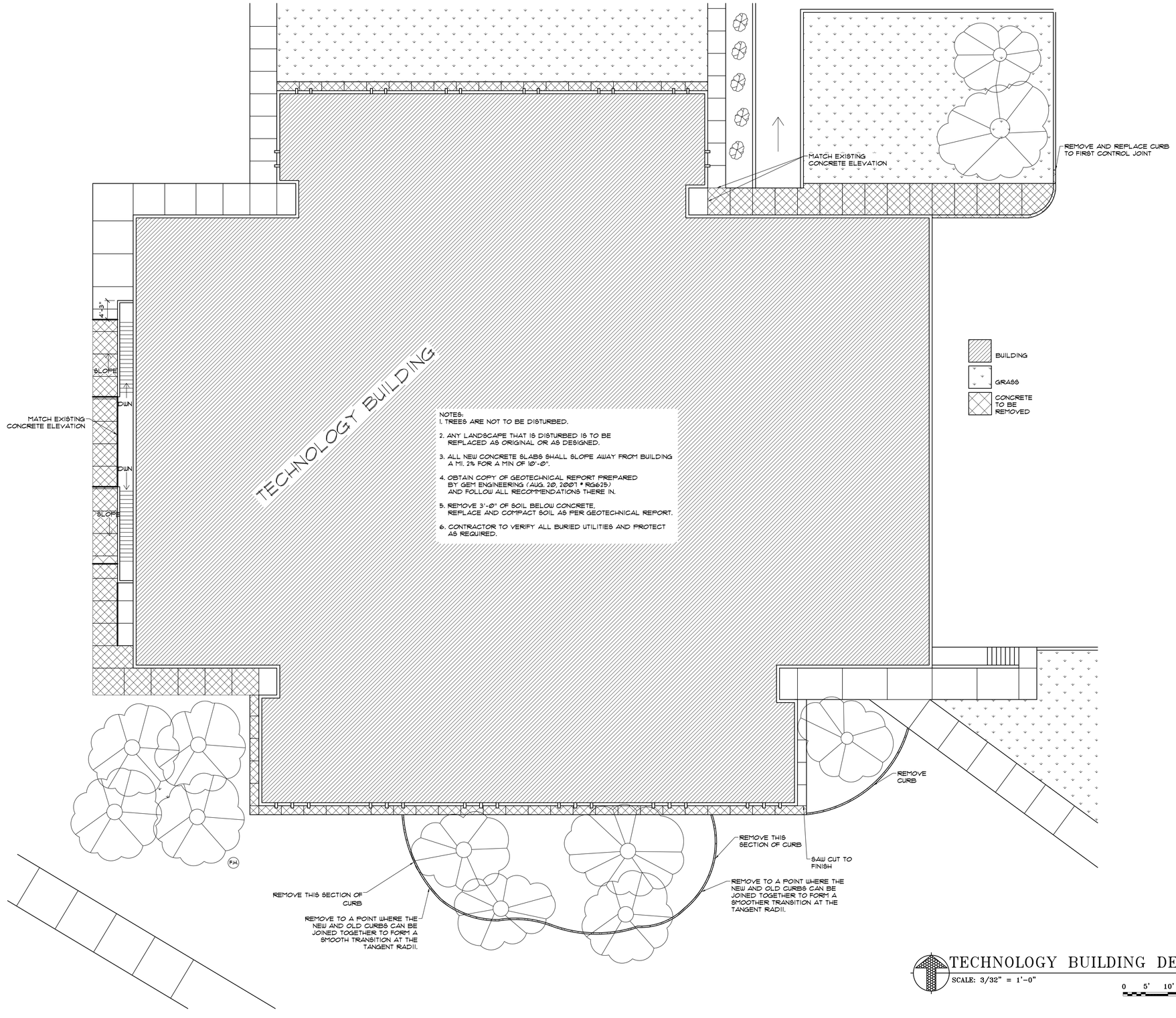

NOTES:

1. TREES ARE NOT TO BE DISTURBED.
2. ANY LANDSCAPE THAT IS DISTURBED IS TO BE REPLACED AS ORIGINAL OR AS DESIGNED.
3. ALL NEW CONCRETE SLABS SHALL SLOPE AWAY FROM BUILDING A MI. 2% FOR A MIN OF 10'-0".
4. OBTAIN COPY OF GEOTECHNICAL REPORT PREPARED BY GEM ENGINEERING (AUG. 20, 2007 * RG625) AND FOLLOW ALL RECOMMENDATIONS THERE IN.
5. REMOVE 3'-0" OF SOIL BELOW CONCRETE. REPLACE AND COMPACT SOIL AS PER GEOTECHNICAL REPORT.
6. CONTRACTOR TO VERIFY ALL BURIED UTILITIES AND PROTECT AS REQUIRED.

TECHNOLOGY BUILDING DEMOLITION PLAN

SCALE: 3/32" = 1'-0"

0 5' 10' 20'

REVISIONS-DATE
1 2 3 4 5
Dec 5, 2007

DRAWN BY: MJK
CHECKED BY:

ENGINEER

ARCHITECT

DM ASSOCIATES, INC.
STRUCTURAL ENGINEERS
510 S. Main, Ste B9
Cedar City, UT 84720
Ph. (435) 867-4242
4925 Pinehill Dr.
Murray, UT 84107
Ph. (801) 266-8542

SOUTHERN UTAH UNIVERSITY
ALTERNATE BID 1 FOR CONCRETE SETTLEMENT AND WATER DAMAGE
TECHNOLOGY BUILDING, CEDAR CITY UTAH 84720

DFCM# 07166730
DM# 07030
OCT. 8, 2007
SHEET: S-5
OF:

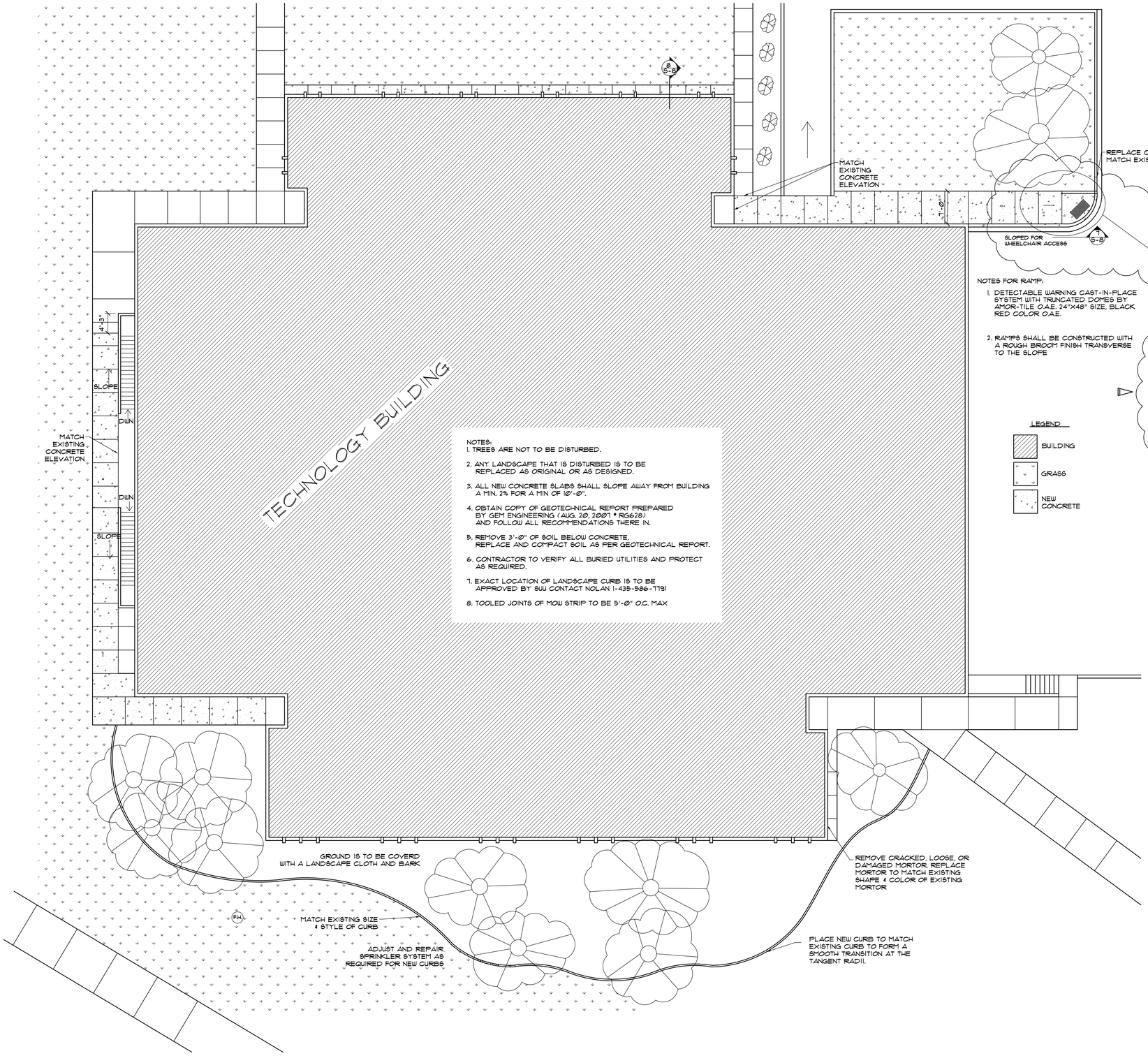

NOTES:
1. TREES ARE NOT TO BE DISTURBED.

2. ANY LANDSCAPE THAT IS DISTURBED IS TO BE REPLACED AS ORIGINAL OR AS DESIGNED.

3. ALL NEW CONCRETE SLABS SHALL SLOPE AWAY FROM BUILDING A MIN. 2% FOR A MIN OF 10'-0".

4. OBTAIN COPY OF GEOTECHNICAL REPORT PREPARED BY GEM ENGINEERING (AUG. 20, 2007 * RG628) AND FOLLOW ALL RECOMMENDATIONS THERE IN.

5. REMOVE 3'-0" OF SOIL BELOW CONCRETE, REPLACE AND COMPACT SOIL AS PER GEOTECHNICAL REPORT.

6. CONTRACTOR TO VERIFY ALL BURIED UTILITIES AND PROTECT AS REQUIRED.

7. EXACT LOCATION OF LANDSCAPE CURB IS TO BE APPROVED BY SUU CONTACT NOLAN 1-435-586-7791

8. TOOLED JOINTS OF MOW STRIP TO BE 5'-0" O.C. MAX

NOTES FOR RAMP:

1. DETECTABLE WARNING CAST-IN-PLACE SYSTEM WITH TRUNCATED DOMES BY AMOR-TILE O.A.E. 24"X48" SIZE, BLACK RED COLOR O.A.E.

2. RAMPS SHALL BE CONSTRUCTED WITH A ROUGH BROOM FINISH TRANSVERSE TO THE SLOPE

LEGEND

- BUILDING
- GRASS
- NEW CONCRETE

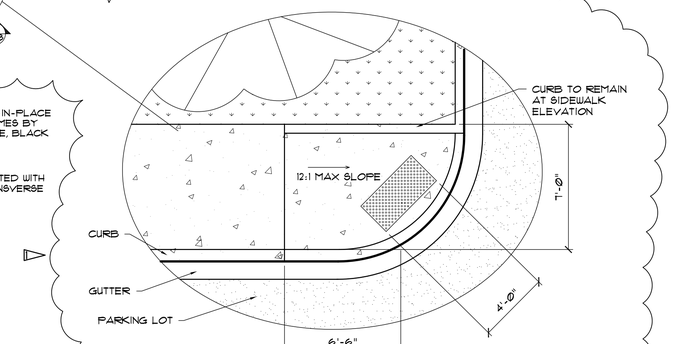

WHEEL CHAIR ACCESS

SCALE: 1/4" = 1'-0"

NOTES:
1. USE 4000 P.S.I. CONCRETE AS SPECIFIED IN SECTION 03000.

2. SLOPES SHOWN AS 12:1 SHALL BE MEASURED USING THE AVERAGE GRADE OF THE CLOSEST 50' OF SIDE WALK UPHILL FROM THE RAMP AS A HORIZONTAL REFERENCE (BY DEFINITION). WHERE THE AVERAGE GRADE IS LESS THAN 12:1 OR HAS A NEGATIVE SLOPE, THE SIDEWALK RAMP SHALL BE CONSTRUCTED AS A 12:1 FROM ACTUAL HORIZONTAL.

3. ALTERNATE LOCATION OR HANDICAP RAMP FOR STREETS WITH P.T. CURVE RADIUS OR LESS THEN 25' AND WITH SLOPES GREATER THAN 10% USED WITH APPROVAL OF PLANT OPERATIONS.

4. EDGE SIDEWALK WITH 1/2" RADIUS EDGING TOOL. ROUND EDGES AT EXPANSION JOINTS TO A RADIUS OR 1/2".

5. USE FINE HAIR BROOM TO FINISH ON GRADES UNDER 6%. OVER 6% GRADE USE ROUGH HAIR BROOM.

6. UNDER RAMP USE UNTREATED BASE COURSE MATERIAL ONLY WHERE EXISTING SOIL IS UNSATISFACTORY AND WHERE USE IS APPROVED BY PLANT OPERATIONS.

7. USE EXPANSION JOINT FILLER MADE OF PRE MOLDED BITUMINOUS OR SIMILAR MATERIAL AND PLACE AT THE INTERSECTIONS WITH OTHER SIDEWALKS AS SHOWN.

8. SLOPES SHOWN ARE MAXIMUM SLOPES.

9. WHERE EXISTING GROUND BEHIND SIDEWALK IS TOO HIGH TO ALLOW SIDEWALK TO RAMP DOWN, GRADE GROUND TO ALLOW SIDEWALK TO RAMP DOWN. GRADE TO ACCEPTABLE SLOPE OR INSTALL CURB WALL AS REQUIRED.

TECHNOLOGY BUILDING REPAIR PLAN

SCALE: 3/32" = 1'-0"

0 5' 10' 20'

REVISIONS-DATE
1- 2- 3- 4- 5-
Dec 5, 2007

DRAWN BY: MJK
CHECKED BY:

ENGINEER

ARCHITECT

DM ASSOCIATES, INC.
STRUCTURAL ENGINEERS
510 S. Main, Ste B9
Cedar City, UT 84720
Ph (435) 867-4242
4925 Pinehill Dr.
Murray, UT 84107
Ph (801) 266-8542

SOUTHERN UTAH UNIVERSITY
ALTERNATE BID 1 FOR CONCRETE SETTLEMENT AND WATER DAMAGE
TECHNOLOGY BUILDING, CEDAR CITY UTAH 84720

DFCM# 07166730
DM# 07030
OCT 8, 2007
SHEET: S-6
OF:

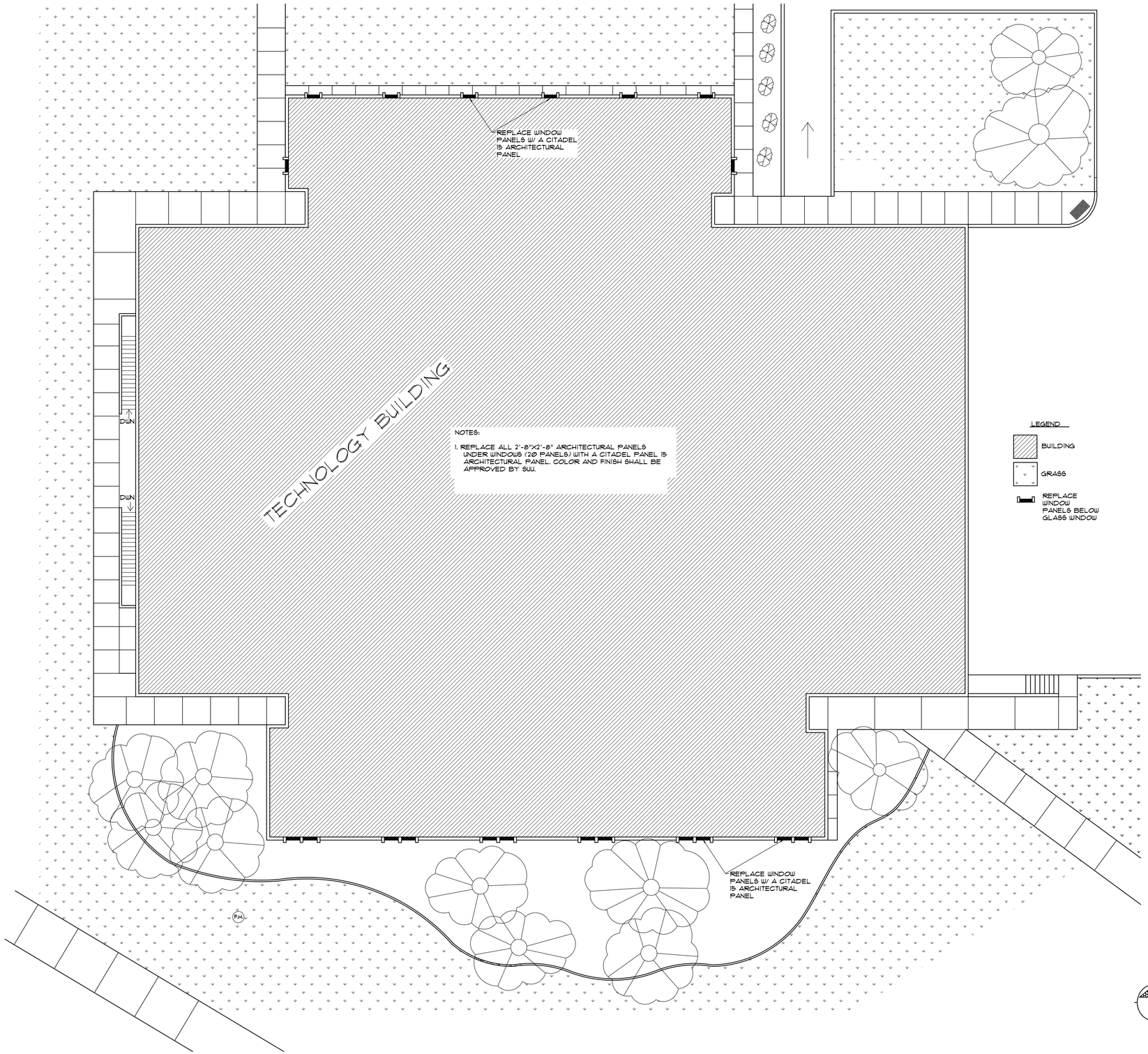

TECHNOLOGY BUILDING REPAIR PLAN

SCALE: 3/32" = 1'-0"

0 5' 10' 20'

REVISIONS–DATE

1 2 3 4 5

DRAWN BY: MJK

CHECKED BY:

ENGINEER

ARCHITECT

DM ASSOCIATES, INC.
STRUCTURAL ENGINEERS
510 S. Main, Ste B9
Cedar City, UT 84720
Ph (435) 867-4242
4925 Pinehill Dr.
Murray, UT 84107
Ph (801) 266-8542

SOUTHERN UTAH UNIVERSITY

ALTERNATE BID 3 FOR CONCRETE SETTLEMENT AND WATER DAMAGE

TECHNOLOGY BUILDING, CEDAR CITY UTAH 84720

DFCM# 07166730

DM# 07030

OCT 8, 2007

SHEET: S-7

OF:

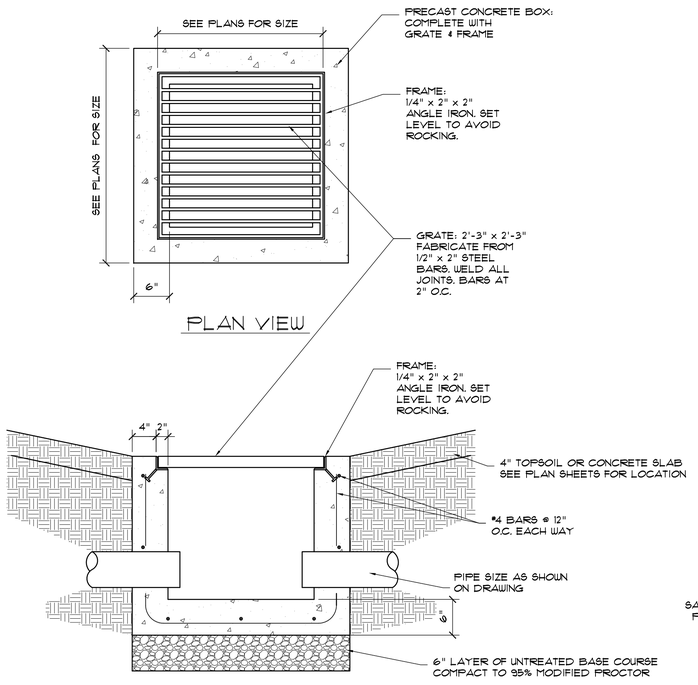

1 S-8 CATCH BASIN DETAIL

SCALE:1" = 1'-0"

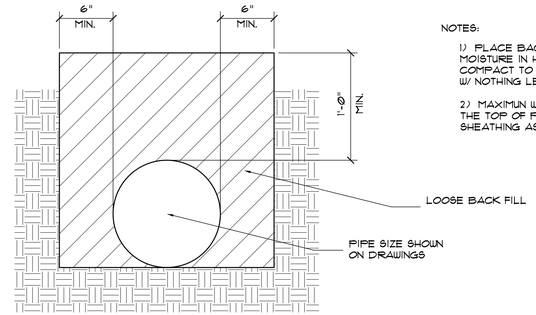

NOTES:

1) PLACE BACK FILL IN PIPE ZONE @ OPTIMUM MOISTURE IN HORIZONTAL 8" DEEP LOOSE LAYERS. COMPACT TO 96% ASTM D-698 DRY DENSITY W/ NOTHING LESS THAN 92%

2) MAXIMUN WIDTH OF TRENCH MEASURED @ THE TOP OF PIPE. INCLUDING ANY NECESSARY SHEATHING AS FOLLOWS

2 S-8 DRAIN PIPE DETAIL

SCALE:1-1/2" = 1'-0"

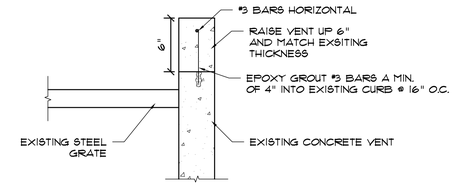

5 S-8 VENT CURB EXTENSION

SCALE:1-1/2" = 1'-0"

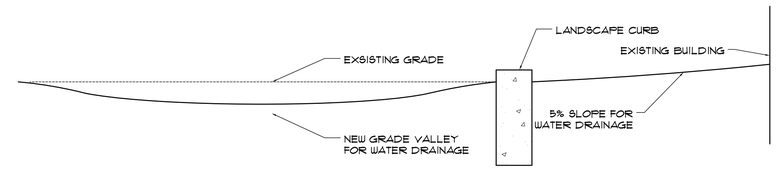

6 S-8 WATER DRAINAGE

SCALE:1" = 1'-0"

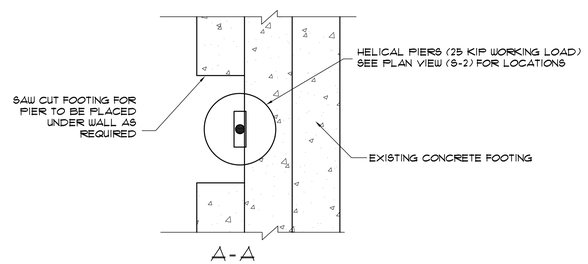

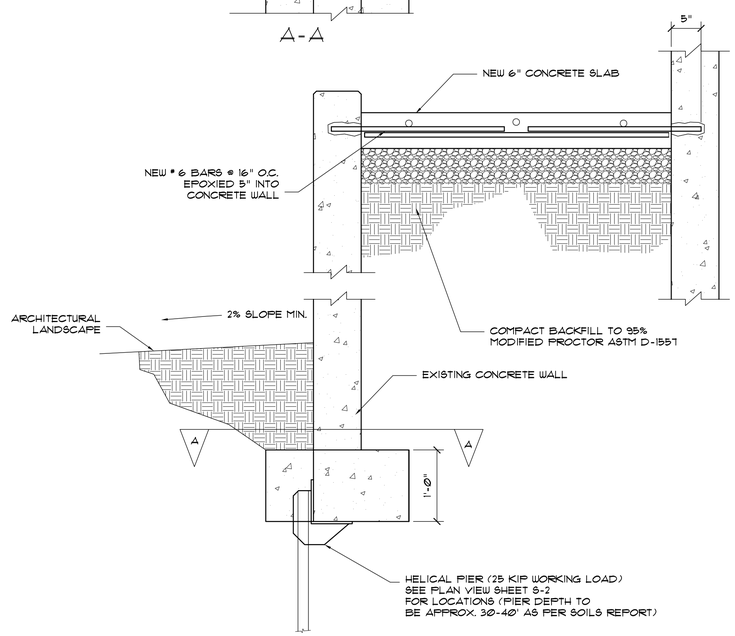

4 S-8 HELICAL PIER DETAIL

SCALE:1" = 1'-0"

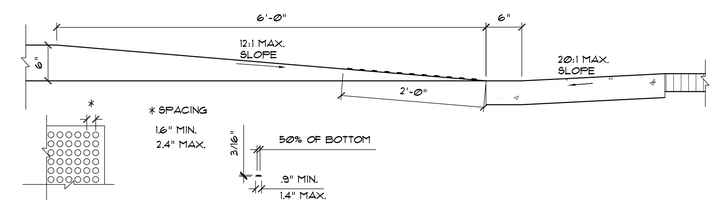

7 S-8 WHEEL CHAIR DETAIL

SCALE:1" = 1'-0"

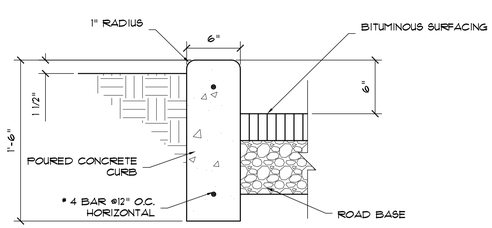

3 S-8 CURB DETAIL

SCALE:1-1/2" = 1'-0"

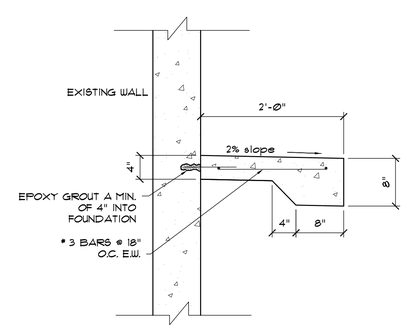

8 S-8 MOW STRIP DETAIL

SCALE:1" = 1'-0"

REVISIONS-DATE

1 2 3 4 5

DRAWN BY: NWA

CHECKED BY:

ENGINEER

ARCHITECT

DM ASSOCIATES, INC.
STRUCTURAL ENGINEERS
510 S. Main, Ste B9
Cedar City, UT 84720
Ph (435) 867-4242
4925 Pinehill Dr.
Murray, UT 84107
Ph (801) 266-8542

SOUTHERN UTAH UNIVERSITY

DETAILS FOR CONCRETE SETTLEMENT AND WATER DAMAGE BIDS

CEDAR CITY UTAH 84720

DFCM# 07166730

DM# 07030

OCT 8, 2007

SHEET: S-8

OF:

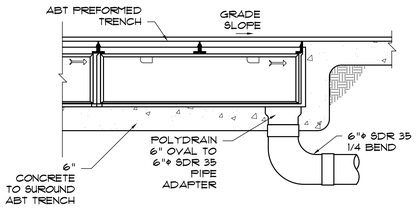

1 / S-9 TRENCH DRAIN DETAILS

SCALE: 1"=1'-0"

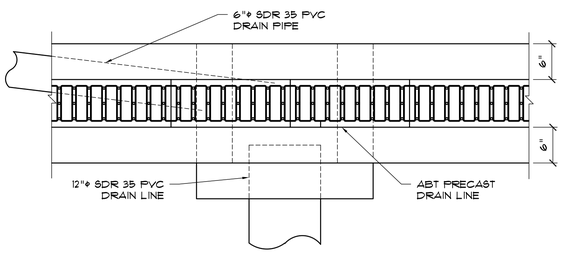

3 / S-9 TRENCH DRAIN DETAILS

SCALE: 1"=1'-0"

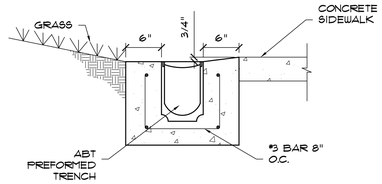

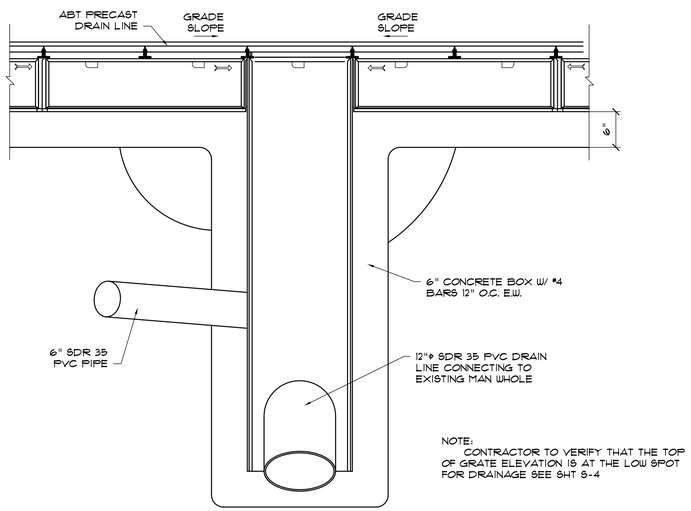

NOTE:
CONTRACTOR TO VERIFY THAT THE TOP OF GRATE ELEVATION IS AT THE LOW SPOT FOR DRAINAGE SEE SHT S-4

2 / S-9 TRENCH DRAIN DETAILS

SCALE: 1"=1'-0"

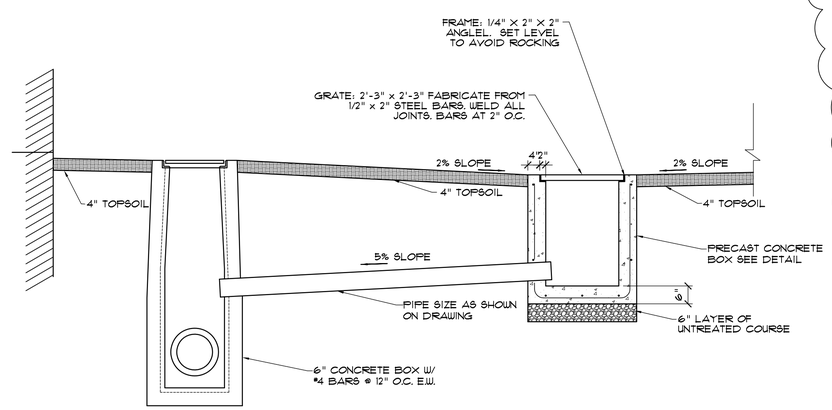

4 / S-9 TRENCH DRAIN DETAILS

SCALE: 1/2"=1'-0"

1

SPECIAL INSPECTION

THE CONTRACTOR SHALL EMPLOY AN INDEPENDENT INSPECTOR OR INSPECTORS TO INSPECT THE ITEMS LISTED BELOW. THE SPECIAL INSPECTOR SHALL BE QUALIFIED TO INSPECT THE FOLLOWING ITEMS AND SHALL DEMONSTRATE HIS OR HER COMPETENCE TO THE SATISFACTION OF THE ENGINEER OF RECORD.

THE SPECIAL INSPECTOR SHALL OBSERVE THE WORK FOR CONFORMANCE TO THE APPROVED DESIGN DRAWINGS AND SPECIFICATIONS. THE SPECIAL INSPECTOR SHALL FURNISH INSPECTION REPORTS TO THE BUILDING OFFICIAL AND THE ENGINEER. A FINAL SIGNED REPORT SHALL BE SUBMITTED STATING WHETHER THE WORK WAS IN CONFORMANCE TO THE APPROVED PLANS AND SPECIFICATIONS.

STRUCTURAL WELDING

ALL WELDING DONE IN AN ICBO APPROVED FABRICATING SHOP AS OUTLINED IN SECTION 1701.1 OF THE 1997 UNIFORM BUILDING CODE, DOES NOT REQUIRE SPECIAL INSPECTION.

ALL WELDING NOT DONE IN AN ICBO APPROVED FABRICATING SHOP SHALL HAVE CONTINUOUS INSPECTION FOR ALL WELD SIZES EXCEEDING 5/16 INCH OF A SINGLE PASS FILLET WELD.

ALL WELDING NOT DONE IN AN ICBO APPROVED FABRICATING SHOP SHALL HAVE PERIODIC INSPECTION FOR WELDING NOT EXCEEDING 5/16 INCH FOR A SINGLE PASS FILLET WELD.

CONCRETE

CONTINUOUS INSPECTION IS REQUIRED DURING THE PLACEMENT OF REINFORCED CONCRETE AND, DURING THE TAKING OF CONCRETE TESTS.

ONE CONCRETE TEST SHALL BE RANDOMLY TAKEN FOR EACH 50 YARDS OF CONCRETE PLACED.

ONE CONCRETE TEST INCLUDES BUT IS NOT LIMITED TO ONE SLUMP TEST, ONE AIR ENTRAINMENT TEST AND, THREE CONCRETE CYLINDERS.

CONCRETE SHALL BE REJECTED FOR SLUMP AND AIR ENTRAINMENT THAT DO NOT MEET THE TOLERANCES SPECIFIED IN THE STRUCTURAL NOTES.

MASONRY

CONTINUOUS INSPECTION IS REQUIRED DURING THE PLACEMENT OF MASONRY UNITS AND, DURING THE TAKING OF GROUT SPECIMENS AND MORTAR SPECIMENS AND/OR PRISMS.

ONE GROUT AND PRISM TEST SHALL BE RANDOMLY TAKEN FOR EACH 15 YARDS OF GROUT PLACED, WITH A MINIMUM OF ONE TEST EACH TIME GROUT IS PLACED.

ONE GROUT TEST INCLUDES BUT IS NOT LIMITED TO THREE MORTAR CYLINDERS.

PERIODIC INSPECTIONS IS REQUIRED TO INSURE CLEAN GROUT SPACE, AND GRADE, SIZE AND PLACEMENT OF REINFORCEMENT PRIOR TO GROUTING.

REINFORCING STEEL

VISUAL INSPECTION FOR PROPER PLACEMENT AND, PROPER SIZE OF REINFORCING STEEL IS REQUIRED PRIOR TO PLACEMENT OF CONCRETE.

EPOXY

WHEN EPOXY IS USED TO SECURE BOLTS AND REINFORCING STEEL IN DRILLED HOLES IN EXISTING CONCRETE CONTINUOUS INSPECTION IS REQUIRED DURING PLACEMENT OF THE EPOXY AND DURING THE PLACEMENT OF THE BOLTS AND REINFORCING STEEL.

BOLTS EMBEDDED IN CONCRETE

ALL BOLTS EMBEDDED IN CONCRETE SHALL BE VISUALLY INSPECTED PRIOR TO PLACING ANY CONCRETE. THE BOLTS SHALL BE TIED AND SUPPORTED SO AS NOT TO MISALIGN DURING THE PLACING OF CONCRETE. BOLT HOOKS SHALL BE PLACED AROUND CONCRETE REINFORCING STEEL UNLESS NOTED OTHERWISE IN THE PLANS.

CONTINUOUS INSPECTION

CONTINUOUS INSPECTION MEANS THAT THE INSPECTOR IS ON THE SITE OBSERVING THE WORK THAT REQUIRES THE INSPECTION. THE INSPECTOR IS TO BE PRESENT AT ALL TIMES WHEN WORK IS BEING DONE ON THAT PORTION OF THE PROJECT REQUIRING CONTINUOUS INSPECTION.

PERIODIC INSPECTION

PERIODIC INSPECTION MEANS THAT THE INSPECTION IS COMPLETED ON A PERIODIC BASIS PROVIDED THE MATERIALS, QUALIFICATIONS OF WELDING PROCEDURES AND WELDERS ARE VERIFIED PRIOR TO THE START OF WORK. PERIODIC INSPECTIONS ARE MADE OF WORK IN PROGRESS AND A VISUAL INSPECTION OF ALL WELDS IS MADE PRIOR TO COMPLETION.

REVISIONS-DATE
Dec 5, 2007
1 2 3 4 5

DRAWN BY: MJK
CHECKED BY:

ENGINEER

ARCHITECT

DM ASSOCIATES, INC.
STRUCTURAL ENGINEERS
510 S. Main, Ste B9
Cedar City, UT 84720
Ph (435) 867-4242
4925 Pinehill Dr.
Murray, UT 84107
Ph (801) 266-8542

SOUTHERN UTAH UNIVERSITY

DETAILS FOR CONCRETE SETTLEMENT AND WATER DAMAGE BIDS

CEDAR CITY UTAH 84720

DFCM# 07166730

DM# 07030

OCT 8, 2007

SHEET: S-9

OF: