CODE ANALYSIS

APPLICABLE CODES

	Year		Year
International Building Code	2006	National Electrical Code	2006
International Mechanical Code	2006	Uniform Code for	
International Plumbing Code	2006	Building Conservation	
International Fire Code	2006	ADA Accessibility	
International Energy Conservation Code	2006	Guildelines	ICC/ANSI 117.1 1998

A. Occupancy and Group: B (BUSINESS)

Change in Use: Yes ____ No ✓ Mixed Occupancy: Yes ✓ No ____

Special Use and Occupancy (e.g. High Rise, Covered Mall): ____

B. Seismic Design Category: N/A Design Wind Speed: N/A mph

C. Type of Construction (circle one):

I/A I/B II/A II/B III/A III/B IV/HT V/A (V/B)

D. Fire Resistance Rating Requirements for the Exterior Walls based on the fire separation distance (in hours):

North: N/A South: N/A East: N/A West: N/A

E. Mixed Occupancies: NO Nonseparated Uses: NO

F: Sprinklers:

Required: NO Provided: NO Type of Sprinkler System: N/A

G: Number of Stories: 1 Building Height: 16'

H: Actual Area per Floor (square feet): EXISTING: 19,313 SF NEW: 0 SF

I. Fire Resistance Rating Requirements for Building Elements (hours).

Fire-Resistive Requirements:	Type: V-B
Bearing walls - Interior:	0
Exterior Non-Bearing Walls:	0
Structural Frame:	0
Partitions:	0
Shafts:	0
Floors - Ceilings:	0
Roofs - Ceilings:	0

J. Design Occupant Load: 19,313 / 100 = 194

Exit Width Required: 39 Exit Width Provided: 540

PROJECT TEAM

OWNER:
DFCM
Mike Ambre
Project Manager
4110 State Office Bldg.
Salt Lake City, Utah 84114
phone (801) 538-3174

USER:
DRIVER LICENSE DIVISION
Viny Roos
phone (801)965-4456

ARCHITECT:
AXIS ARCHITECTS
Pierre O. Langue AIA
352s. Denver st,
Salt Lake City, Utah 84112
phone (801)355-3003
fax (801)355-8578

STRUCTURAL:
BsumekMu Engineering
Reinhardt Bsumek
345 South 400 East
Salt Lake City, Utah 84111
phone (801)575-8223
fax (801)532-3778

MECHANICAL:
Spectrum Engineers
Jonathan Jensen
175 South Main Street
Salt Lake City, Utah 84111
phone (801)328-5151

ELECTRICAL:
BNA Consulting
Joshua Oakeson
635 S. State Street
Salt Lake City, Utah 84111
phone (801) 532-2196
fax(801) 532-2305

VINCITY MAP

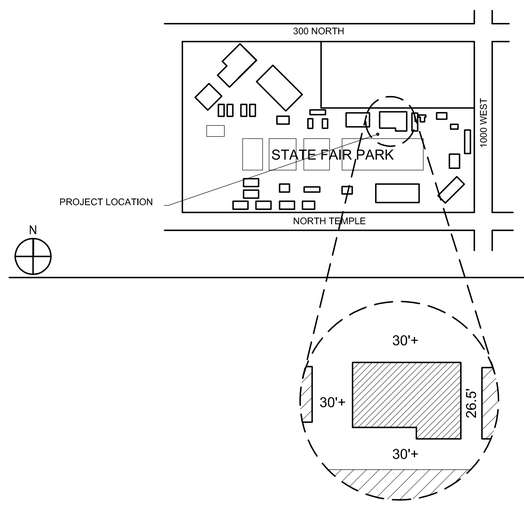

SYMBOL LEGEND

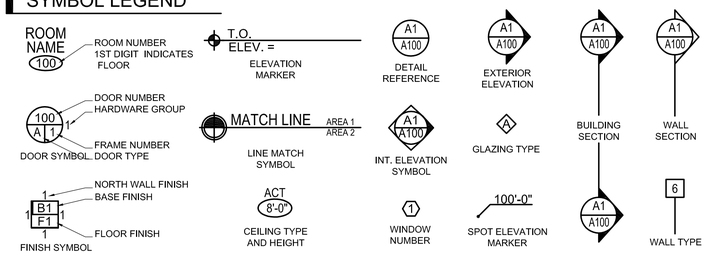

GRAPHIC SYMBOLS

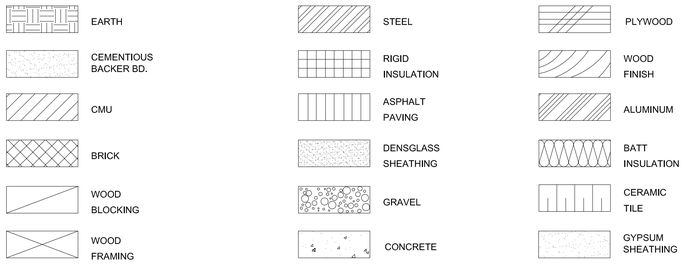

DRAWING INDEX

GENERAL

GI101 GENERAL INFORMATION

ARCHITECTURAL

AD101 DEMOLITION FLOOR PLAN
AE101 FLOOR PLAN
AE111 REFLECTED CEILING PLAN
AE401 INTERIOR ELEVATIONS

STRUCTURAL

SEE DETAIL BOOK IN PROJECT MANUAL

MECHANICAL

ME001 MECHANICAL NOTES AND SYMBOL LEGEND
ME501 MECHANICAL SCHEDULES AND DETAILS
MD101 MECHANICAL DEMOLITION FLOOR PLAN
MH101 MECHANICAL FLOOR PLAN
PE501 PLUMBING DETAILS & SCHEDULES
PD101 PLUMBING DEMOLITION FLOOR PLAN
PL101 PLUMBING FLOOR PLAN

ELECTRICAL

E001 SYMBOLS SCHEDULES AND NOTES
E101 ELECTRICAL DEMOLITION PLAN
E201 LIGHTING PLAN
E301 POWER PLAN
E401 PANELBOARD SHED. AND ONE-LINE DIAGRAM
E501 ELECTRICAL DIAGRAMS
E502 ELECTRICAL DIAGRAMS
E503 ELECTRICAL DIAGRAMS

NOTE: THE SHEETS LISTED ABOVE REPRESENT A FULL SET OF CONSTRUCTION DOCUMENTS AND INCLUDE A DETAIL BOOK AND A PROJECT MANUAL AND SHALL NOT BE SEPERATED. ANY CONTRACTOR, SUBCONTRACTOR, VENDOR OR ANY OTHER PERSON PARTICIPATING IN OR BIDDING ON THIS PROJECT SHALL BE RESPONSIBLE FOR REVIEWING ALL THE CONSTRUCTION DOCUMENTS INCLUDING BUT NOT LIMITED TO DRAWINGS, DETAILS, PROJECT MANUAL, SPECIFICATIONS AND ANY AND ALL ADDENDA ISSUED.

DRIVERS LICENSE OFFICE
STATE FAIR PARK
DFCM PROJECT # 07009370
155 N. 1000 West Salt Lake City, Utah 84116

State of Utah
Department of Administrative Services
Division of Facilities
Construction & Management
4110 State Office Building
Salt Lake City, Utah 84114
Phone: (801) 538 - 3018
Fax: (801) 538 - 3267

APPROVALS

Prime Agency ____ Date ____

DFCM ____ Date ____

APPROVAL DOES NOT RELIEVE A/E OF DESIGN LIABILITY

Axis Architects
352 S. DENVER ST. SUITE 205 – SALT LAKE CITY – UTAH 84111 – P. 355-3003 – F 355-0113

DRIVERS LICENSE OFFICE State Fairpark
Conference Center - 155 N.1000 West, SLC. Utah 84116

Revision # Date

Axis Job # 0633
Owner # DFCM # 07009370
Date 7-16-2007
Drawn -
Checked -

INFORMATION SHEET

GI101

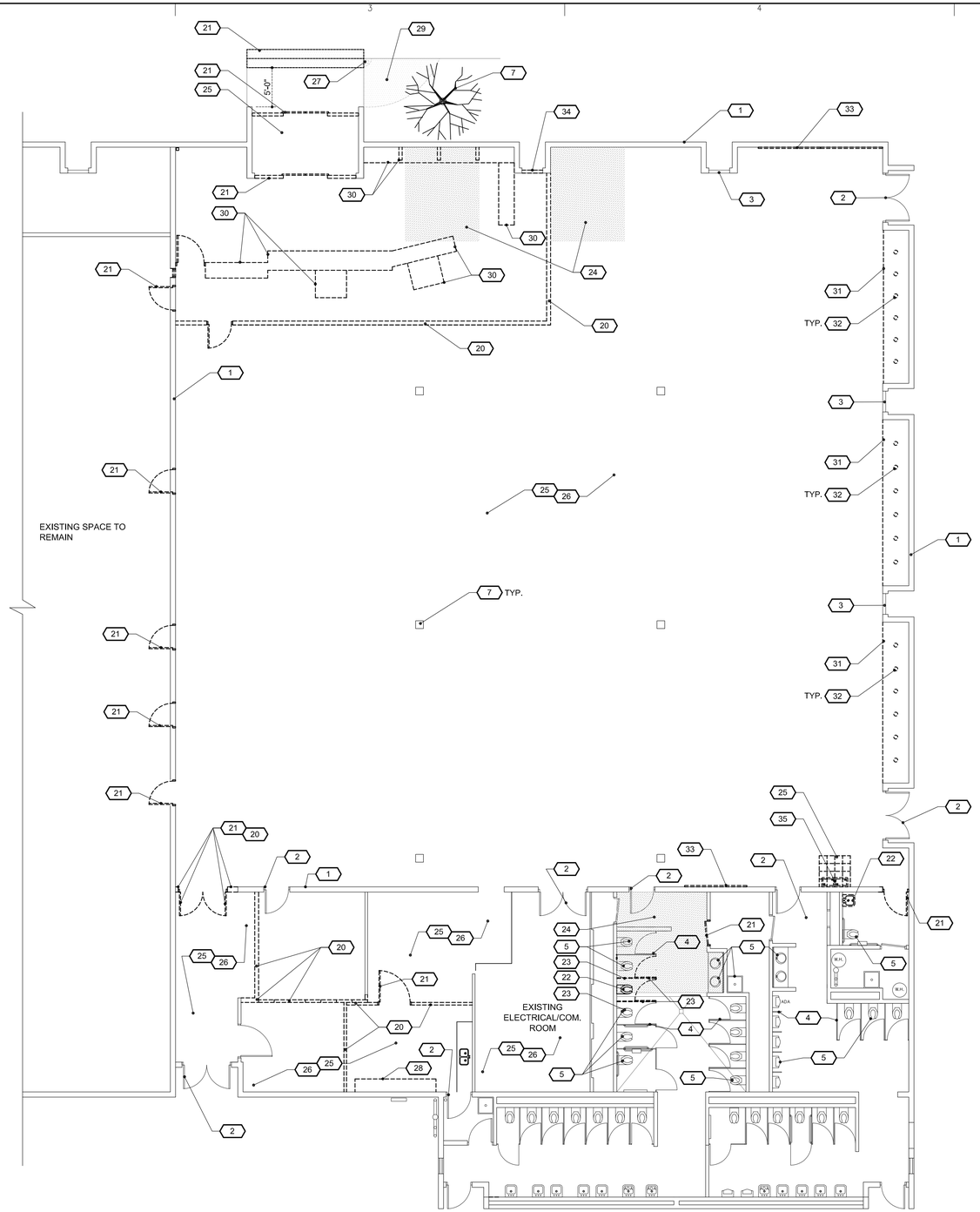

DEMOLITION KEYNOTE LEGEND

1 EXISTING WALL TO REMAIN
2 EXISTING DOOR AND FRAME TO REMAIN
3 EXISTING WINDOW TO REMAIN
4 EXISTING PARTITION TO REMAIN
5 EXISTING PLUMBING FIXTURE TO REMAIN
6 EXISTING WALL TILE TO REMAIN
7 EXISTING TO REMAIN

20 REMOVE WALL
21 REMOVE DOOR AND FRAME AND SALVAGE FOR OWNER
22 REMOVE PLUMBING FIXTURES AND ASSOCIATED PLUMBING - CAP OFF - SALVAGE FOR OWNER.
23 REMOVE TOILET COMPARTMENT PARTITION
24 REMOVE CONCRETE SLAB - REMOVE UNUSED PLUMBING TYP. AT HATCHED AREA.
25 REMOVE CARPET AND OTHER FLOOR FINISH
26 REMOVE CEILING TILE OR OTHER CEILING
27 REMOVE EXISTING CONCRETE RAMP, AND CURB
28 REMOVE CABINET AND PLUMBING
29 REMOVE BOLLARD & GUARDRAIL
30 REMOVE CABINET
31 REMOVE DISPLAY CABINET
32 REMOVE AND SALVAGE LIGHT FIXTURES. PROTECT AND STORE UNTIL TURNED OVER TO OWNER'S REPRESENTATIVE.
33 REMOVE SLAT BOARD DISPLAY.
34 REMOVE WINDOW & FRAME - SALVAGE FOR OWNER.
35 REMOVE EXISTING WATER COOLER & ASSOCIATED PLUMBING. CAP OFF PLUMBING. STORE FIXTURE UNTIL REINSTALLATION PER MECHANICAL.
36 CUT AND REMOVE EXISTING STAIR NOSINGS AND TREADS AS SHOWN.

KEY PLAN

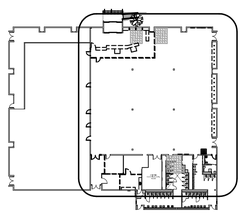

NOTES

1. CONTRACTOR TO PROTECT EXISTING BLDG. DURING CONSTRUCTION INCLUDING FINISHES, DOORS AND FRAMES ETC.
2. SEE ELECTRICAL AND MECHANICAL FOR ADDITIONAL DEMOLITION INFORMATION & DRAWINGS.

B3 DEMOLITION PLAN

SCALE: 1/8"=1'-0"

NORTH

Axis Architects
352 S. DENVER ST. SUITE 205 – SALT LAKE CITY – UTAH 84111 – P. 355-3003 – F 355-0113

DRIVERS LICENSE OFFICE State Fairpark

Conference Center - 155 N.1000 West, SLC. Utah 84116

Revision #	Date
.	
.	
.	
.	
.	

Axis Job #	0633
Owner #	DFCM # 07009370
Date	7-16-2007
Drawn	PL
Checked	PL

DEMOLITION

FLOOR PLAN

AD101

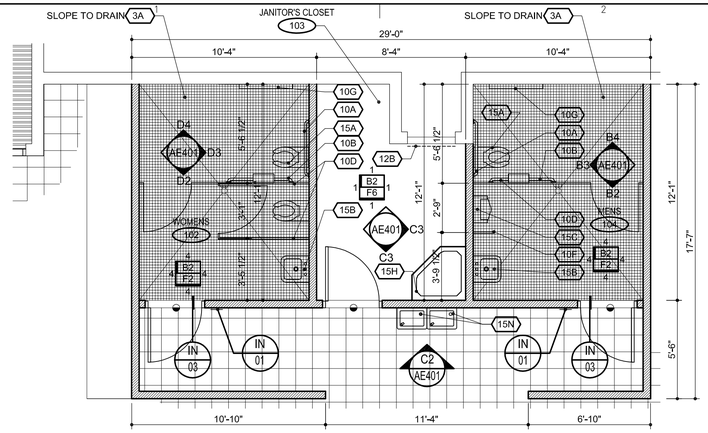

C1 ENLARGED REST ROOM PLAN

SCALE: 1/4"=1'-0"

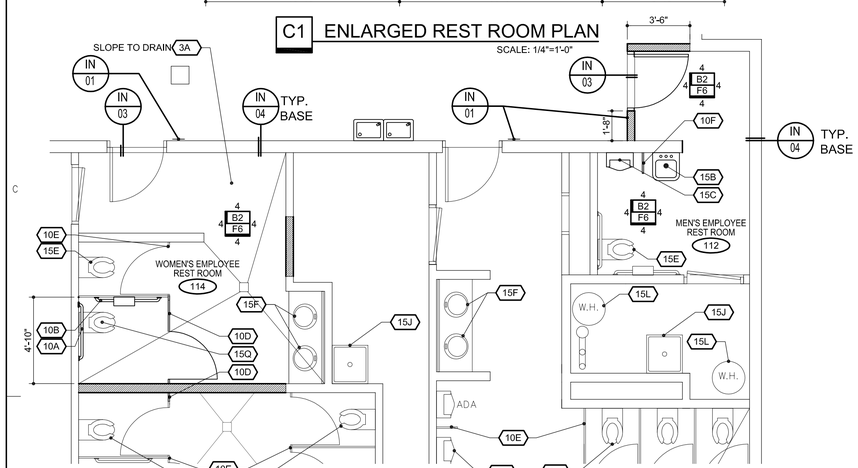

B1 ENLARGED EMPLOYEE REST. PLAN

SCALE: 1/4"=1'-0"

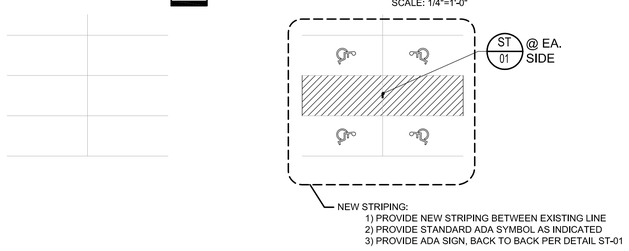

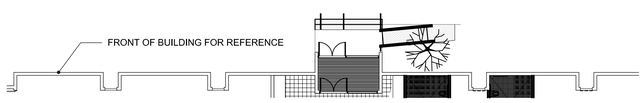

A5 PARKING STRIPING PLAN

SCALE: 1/16"=1'-0"

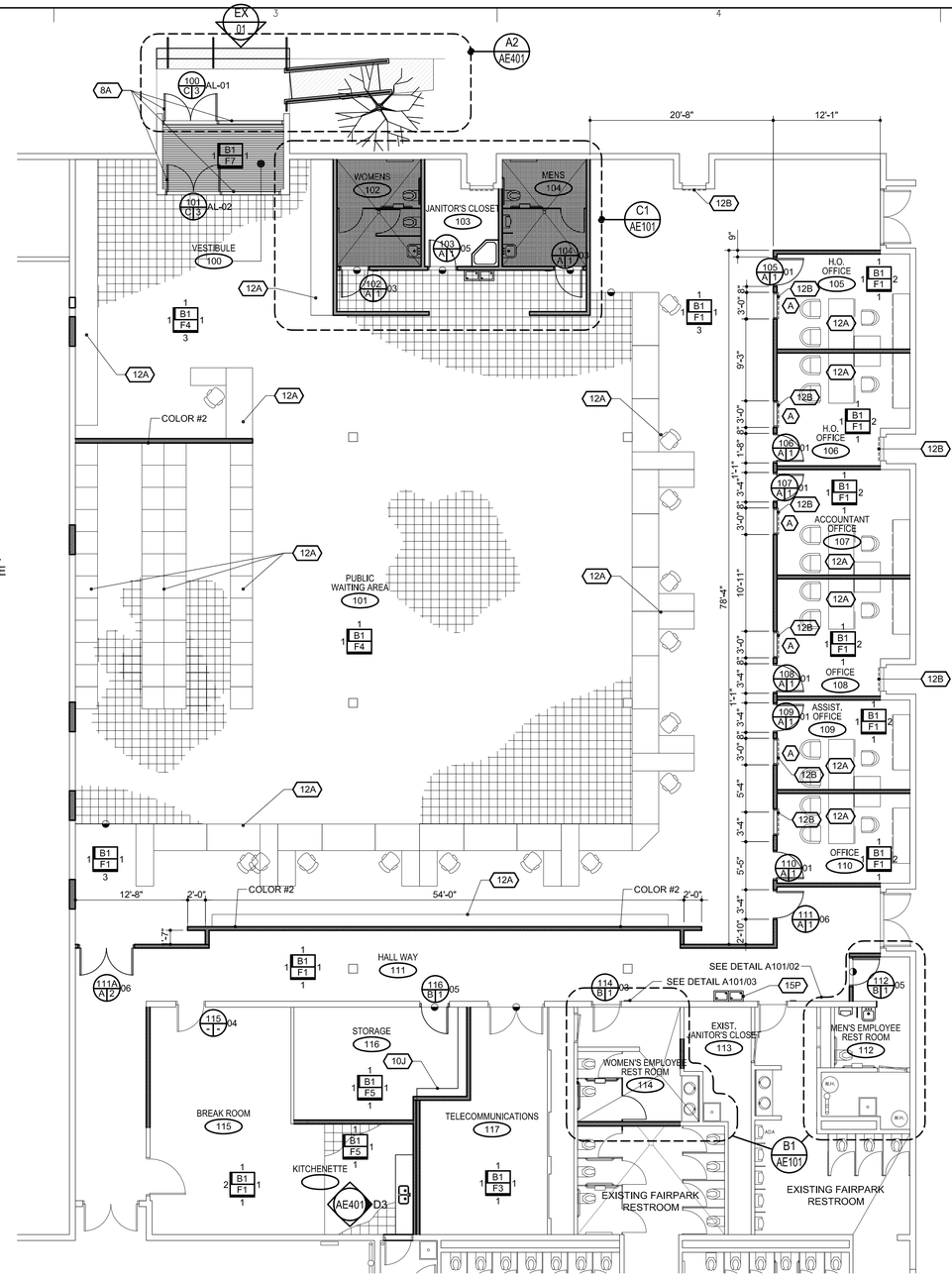

A4 ANNOTATED FLOOR PLAN

SCALE: 1/8"=1'-0"

PROJECT NORTH

KEYNOTE LEGEND

3 - CONCRETE:
- 3A NEW CONCRETE SLAB ON GRADE

8 - DOORS AND WINDOWS:
- 8A NEW DOOR AND FRAME

9 - FINISHES
- 9A 4 X 4 CERAMIC TILE
- 9B PAINTED G.W.B.

10 - SPECIALTIES
- 10A 36" GRAB BAR
- 10B 42" GRAB BAR
- 10C MIRROR
- 10D NEW TOILET PARTITION - TYP.
- 10E EXIST. TOILET PARTITION
- 10F NEW URINAL SCREEN - TYP.
- 10G FOLDING BABY TABLE
- 10H ADA PIPE PROTECTION KIT
- 10J 12" SHELVES
- 10K MOP RACK
- 10L SOAP DISPENSER
- 10M PAPER TOWEL DISPENSER
- 10N TOILET PAPER DISPENSER
- 10P NOT USED
- 10Q PAPER TOILET SEAT COVER DISPENSER

12- FURNITURE
- 12A FURNITURE, NOT IN CONTRACT.
- 12B LOUVERED BLINDS

15 - MECHANICAL:
- 15A NEW TOILET - TYP.
- 15B NEW SINK - TYP.
- 15C NEW URINAL - TYP.
- 15D EXIST. MECH. LOUVER - PAINT.
- 15E EXIST. TOILET - TYP
- 15F EXIST. SINK - TYP.
- 15G EXIST. URINAL - TYP.
- 15H NEW MOP SINK
- 15J EXIST. MOP SINK
- 15K NEW WATER HEATER
- 15L EXIST. WATER HEATER
- 15M NEW ADA TOILET
- 15N NEW WATER COOLER
- 15P REINSTALL EXISTING WATER COOLER - SEE MECH.
- 15Q REINSTALL TOILET AT ADA HEIGHT

FINISH LEGEND

PAINT B# F# ABOVE
- NORTH WALL FINISH
- BASE FINISH
- FLOOR FINISH
- SOUTH WALL FINISH

WALL:
1. PAINTED GYP. BOARD
2. PAINTED GYP. BOARD ACCENT COLOR#1
3. PAINTED GYP. BOARD ACCENT COLOR#2
4. 4 X 4 CERAMIC TILE FULL HEIGHT

FLOOR: F1 CARPET
- F2 2 X 2 PORCELAIN TILE
- F3 SEALED CONCRETE
- F4 12"x12" PORCELAIN TILE
- F5 12 X 12 VCT TILE
- F6 QUARTZ RESINOUS FLOORING
- F7 ENTRANCE FLOOR MAT

BASE:
- B1. RUBBER BASE
- B2. 4" QUARTZ RESINOUS FLOORING - SEE IN-04
- B3. TILE COVE BASE

1. MATERIALS IN SIMILAR LOCATIONS ARE NOT KEYNOTED AT EVERY OCCURRENCE.
2. PROVIDE CONCRETE MOISTURE SEALER ALL AREAS TO RECEIVE A FLOORING FINISH MATERIAL.

KEY PLAN

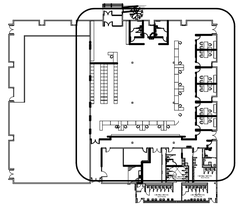

DOOR TYPES

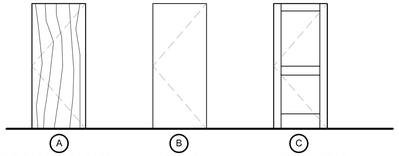

- A SOLID CORE WOOD DOOR
- B PAINTED STEEL DOOR
- C ALUMINUM DOOR

DOOR FRAME TYPES

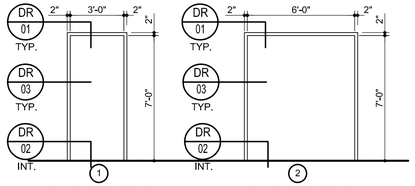

- 1 HOLLOW METAL FRAME
- 2 HOLLOW METAL FRAME
- 3 SEE ALUM. STOREFRONT ON AE401

NOTES

1. CONTRACTOR TO FIELD VERIFY ALL EXISTING CONDITIONS PRIOR TO FABRICATION
2. SEE DETAILS IN-SERIES IN DETAIL BOOK

WALL TYPES

- EXISTING WALL TO REMAIN
- 2x4 STUD WALL WITH GYP. BOARD ON BOTH SIDES - EXTEND TO STRUCTURE ABOVE AND SCHEDULED FINISH. - NO GYP. BOARD IN CHASES

NOTE:
1. ALSO SEE NOTES ON FLOOR PLANS
2. ADD INSLUATION IN OFFICE AND RESTROOM PERIMITER WALLS.

Axis Architects
352 S. DENVER ST. SUITE 205 – SALT LAKE CITY – UTAH 84111 – P. 355-3003 – F 355-0113

DRIVERS LICENSE OFFICE State Fairpark

Conference Center - 155 N.1000 West, SLC, Utah 84116

Revision #	Date
.	
.	
.	
.	
.	

Axis Job #	0633
Owner #	DFCM # 07009370
Date	7-16-2007
Drawn	PL
Checked	PL

ANNOTATED FLOOR PLAN

AE101

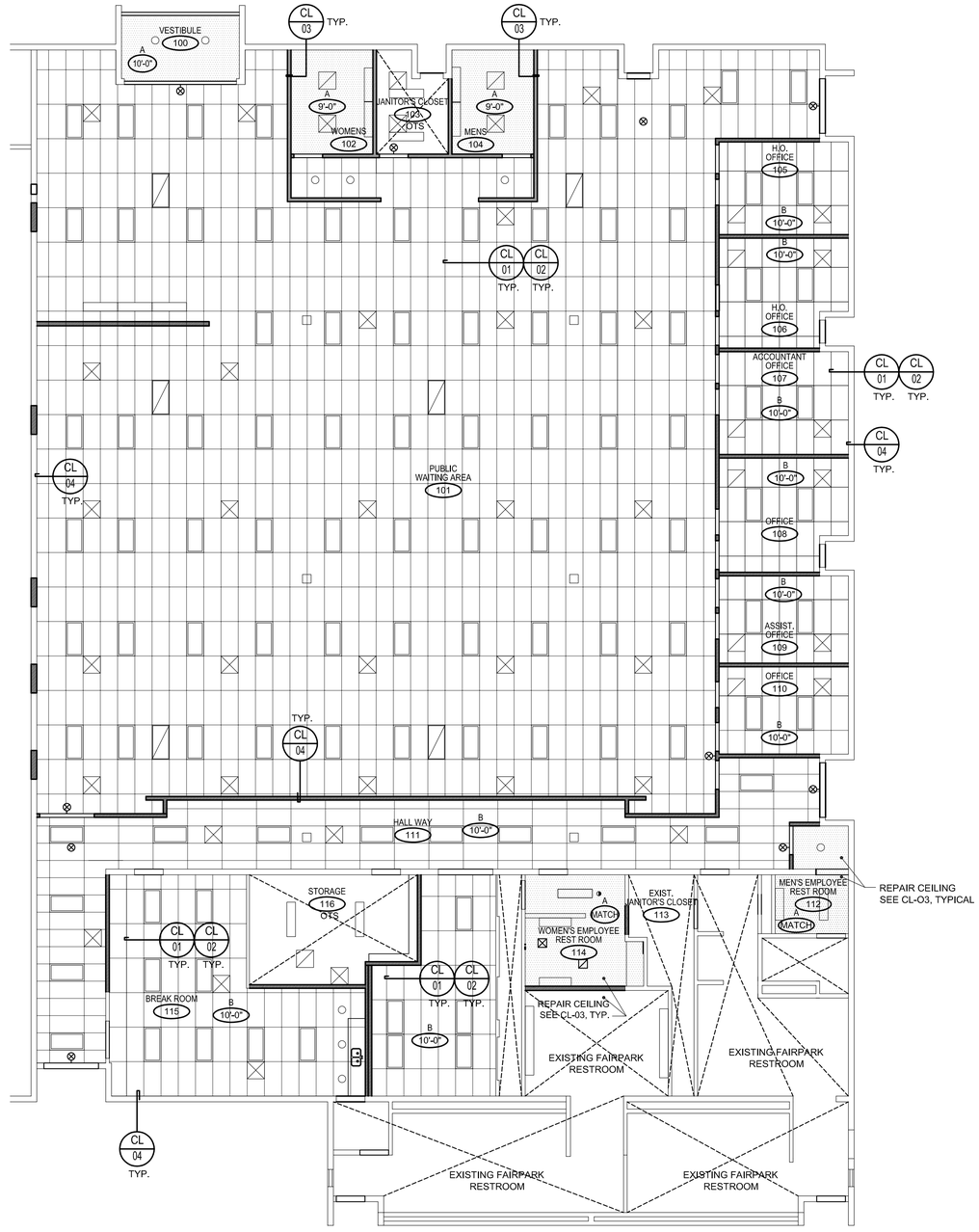

B3 REFLECTED CEILING PLAN

SCALE: 1/4"=1'-0"

PROJECT NORTH

CEILING SYMBOL LEGEND

- 2 X 2 FLUORESCENT LIGHT FIXTURE, REFER TO ELECTRICAL DRAWINGS.
- 2 X 4 FLUORESCENT LIGHT FIXTURE, REFER TO ELECTRICAL DRAWINGS.
- 1 X 4 FLUORESCENT LIGHT FIXTURE, REFER TO ELECTRICAL DRAWINGS
- RECESSED DOWNLIGHT FIXTURE, REFER TO ELECTRICAL DRAWINGS.
- WALL-WASHED LUMINAIRE REFER TO ELECTRICAL DRAWINGS.
- PENDANT FIXTURE
- WALL SCONCE
- WALL MOUNTED FIXTURE
- EMERGENCY EXIT LIGHTING
- RETURN AIR REGISTER, REFER TO ELECTRICAL DRAWINGS.
- SUPPLY AIR DIFFUSER, REFER TO ELECTRICAL DRAWINGS.
- ACCESS PANEL-SEE MECH. FOR FINAL SIZE AND LOCATION NOTE: ADDITIONAL ACCESS PANELS MAY BE REQUIRED-COOR'D. WITH MECH. AND ELECT.

ALSO REFER TO ELECTRICAL AND MECHANICAL DRAWINGS

CEILING SCHEDULE

A — MATERIAL
8'-0" — ELEVATION ABOVE F.F.

- A X'-X" — NEW PAINTED GYP. BOARD CEILING LINE UP WITH EXISTING HEIGHT
- B X'-X" — 2' X 4' ACOUSTIC PANEL CEILING
- OTS — OPEN TO STRUCTURE - EXISTING TO REMAIN

NOTES

1. SEE DETAILS CL-SERIES IN DETAIL BOOK.
   - SEE CL-01 & CL-02 FOR TYPICAL BRACING DETAILS @ ALL SUSPENDED CEILINGS.
   - SEE CL-04 FOR TYPICAL SUSPENDED LAY-IN CEILING EDGE DETAIL.
   - SEE CL-03 FOR TYPICAL CEILING TO WALL TRANSITION @ GYPSUM BOARD CEILINGS.
2. REPAIR CEILINGS AS NEEDED FOR NEW WORK.

Axis Architects
352 S. DENVER ST. SUITE 205 – SALT LAKE CITY – UTAH 84111 – P. 355-3003 – F. 355-0113

DRIVERS LICENSE OFFICE State Fairpark

Conference Center - 155 N.1000 West, SLC. Utah 84116

Revision #	Date
.	
.	
.	
.	
.	

Axis Job #	0633
Owner #	DFCM # 07009370
Date	7-16-2007
Drawn	PL
Checked	PL

REFLECTED CEILING PLAN

AE111

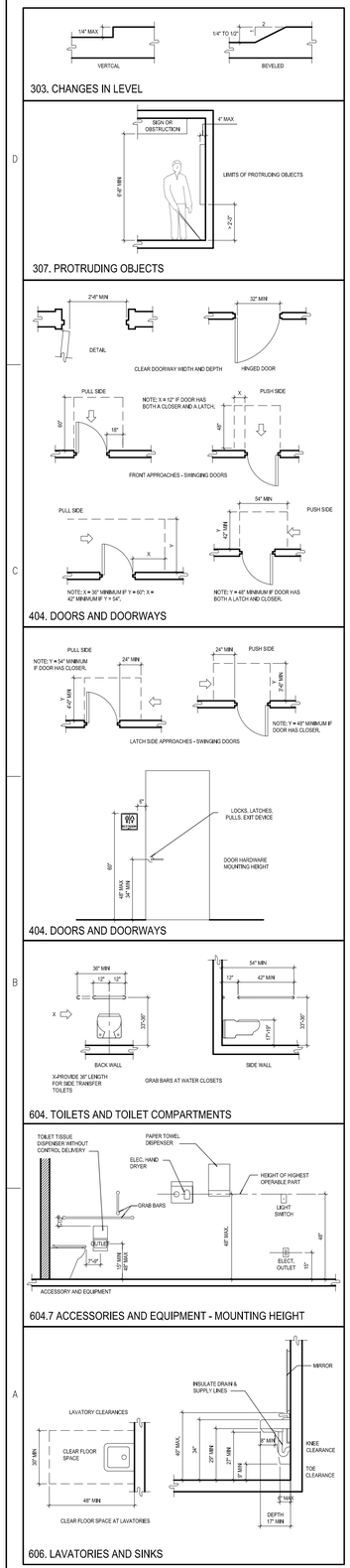

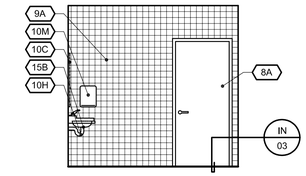

D2 WOMEN'S RESTROOM 101

SCALE: 1/4"=1'-0"

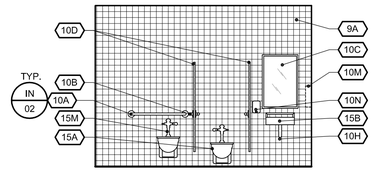

D3 WOMEN'S RESTROOM 101

SCALE: 1/4"=1'-0"

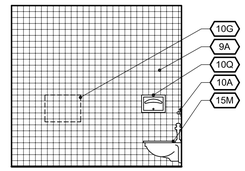

D4 WOMEN'S RESTROOM 101

SCALE: 1/4"=1'-0"

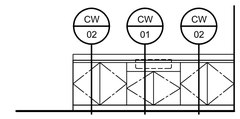

D5 BREAK ROOM MILLWORK

SCALE: 1/4"=1'-0"

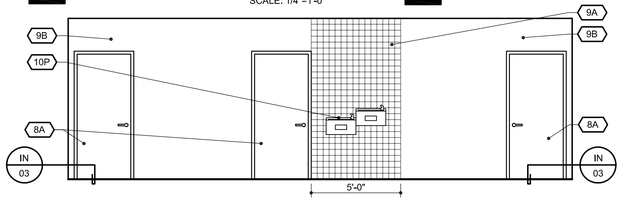

C2 WATER FOUNTAIN ELEVATION

SCALE: 1/4"=1'-0"

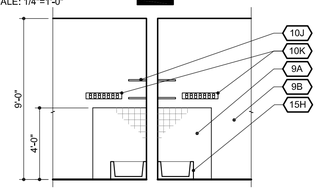

C3 JANITOR CLOSET 103 SIM.

SCALE: 1/4"=1'-0"

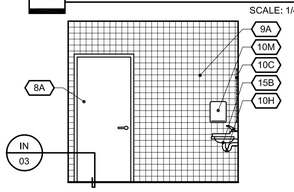

B2 MEN'S RESTROOM 107

SCALE: 1/4"=1'-0"

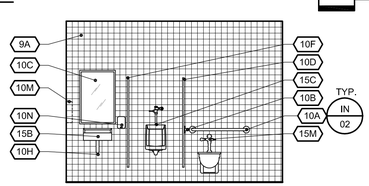

B3 MEN'S RESTROOM 107

SCALE: 1/4"=1'-0"

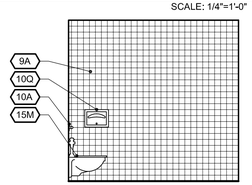

B4 MEN'S RESTROOM 107

SCALE: 1/4"=1'-0"

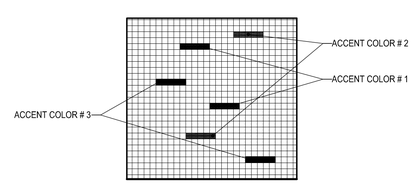

B4 TILE PATTERN

SCALE: 1/4"=1'-0"

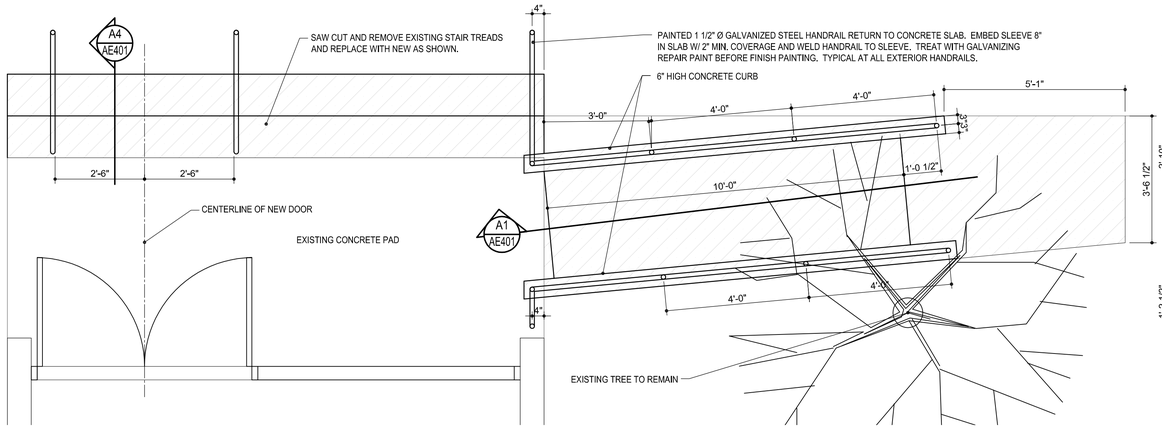

A2 ENLARGED ADA RAMP PLAN AND SECTION

SCALE: 1/2"=1'-0"

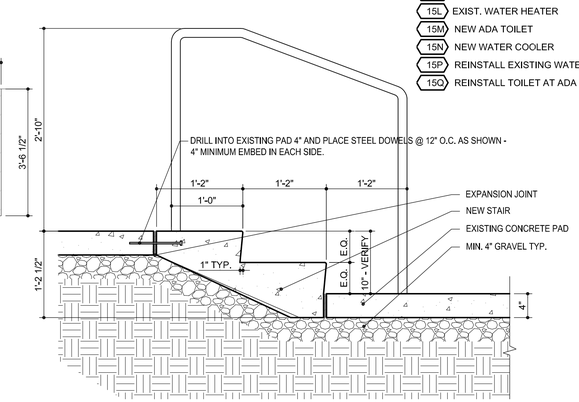

A4 ENLARGED STAIR

SCALE:1"=1'-0"

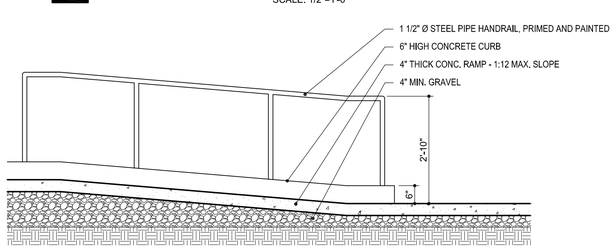

A1 ENLARGED ADA RAMP PLAN AND SECTION

SCALE: 1/2"=1'-0"

WINDOW TYPES - H. METAL

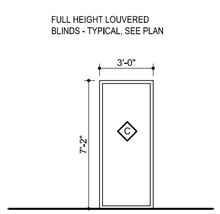

WINDOW TYPES - ALUMINUM STOREFRONT

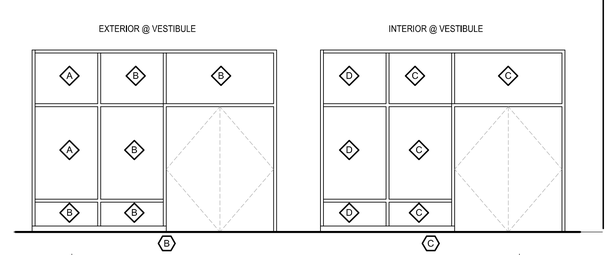

KEYNOTE LEGEND

3 - CONCRETE:
- 3A NEW CONCRETE SLAB ON GRADE

8 - DOORS AND WINDOWS:
- 8A NEW DOOR AND FRAME

9 - FINISHES
- 9A 4 X 4 CERAMIC TILE - SEE B5 AE401
- 9B PAINTED G.W.B.

10 - SPECIALTIES
- 10A 36" GRAB BAR
- 10B 42" GRAB BAR
- 10C MIRROR
- 10D NEW TOILET PARTITION - TYP.
- 10E EXIST. TOILET PARTITION
- 10F NEW URINAL SCREEN - TYP.
- 10G FOLDING BABY TABLE
- 10H ADA PIPE PROTECTION KIT
- 10J 12" SHELVES
- 10K MOP RACK
- 10L SOAP DISPENSER
- 10M PAPER TOWEL DISPENCER
- 10N TOILET PAPER DISPENSER
- 10P NOT USED
- 10Q PAPER TOILET SEAT COVER DISPENCER

12- FURNITURE
- 12A FURNITURE, NOT IN CONTRACT.
- 12B LOUVERED BLINDS

15 - MECHANICAL:
- 15A NEW TOILET - TYP.
- 15B NEW SINK - TYP.
- 15C NEW URINAL - TYP.
- 15D EXIST. MECH. LOUVER - PAINT.
- 15E EXIST. TOILET - TYP
- 15F EXIST. SINK - TYP.
- 15G EXIST. URINAL - TYP.
- 15H NEW MOP SINK
- 15J EXIST. MOP SINK
- 15K NEW WATER HEATER
- 15L EXIST. WATER HEATER
- 15M NEW ADA TOILET
- 15N NEW WATER COOLER
- 15P REINSTALL EXISTING WATER COOLER - SEE MECH.
- 15Q REINSTALL TOILET AT ADA HEIGHT

NOTES

1. CONTRACTOR TO FIELD VERIFY ALL EXISTING CONDITIONS PRIOR TO FABRICATION
2. SEE DETAILS IN-SERIE FOR SIGNAGE

GLAZING SCHEDULE

- A.. 1" INSULATED LOW-E GLASS
- B. 1" INSULATED LOW-E TEMPERED GLASS
- C. 1/4" TEMPERED GLASS
- D. 1/4" FLOAT GLASS

Axis Architects
352 S. DENVER ST. SUITE 205 – SALT LAKE CITY – UTAH 84111 – P. 355-3003 – F 355-0113

DRIVERS LICENSE OFFICE State Fairpark

Conference Center - 155 N.1000 West, SLC. Utah 84116

Revision #	Date
.	
.	
.	
.	
.	

Axis Job #	0633
Owner #	DFCM # 07009370
Date	7-16-2007
Drawn	PL
Checked	PL

INTERIOR ELEVATIONS

AE401

SYMBOL LEGEND

SYMBOL	DESCRIPTION
DUCTWORK	
SINGLE LINE / DOUBLE LINE	DESCRIPTION
	RECTANGULAR SUPPLY DUCT UP
	RECTANGULAR SUPPLY DUCT DOWN
	RECTANGULAR RETURN DUCT UP
	RECTANGULAR RETURN DUCT DOWN
	RECTANGULAR EXHAUST DUCT UP
	RECTANGULAR EXHAUST DUCT DOWN
	ROUND DUCT UP
	ROUND DUCT DOWN
	ACCOUSTICALLY LINED RECTANGULAR DUCT
	90° RECTANGULAR ELBOW WITH TURNING VANES
	90° RADIUS ELBOW R=1.5
	DUCT SIZE OR SHAPE TRANSITION
	OPPOSED BLADE BALANCING DAMPER (O.B.D.) IN RECT DUCT
	BUTTERFLY BALANCING DAMPER IN ROUND DUCTS
	COMBINATION TEE
	SQUARE OR RECTANGULAR CEILING DIFFUSER
	ROUND CEILING DIFFUSER
	SIDEWALL REGISTER SUPPLY OR RETURN
	ROUND FLEXIBLE DUCT
	RETURN GRILLE
	EXHAUST GRILLE
FSD / FSD	FIRE/SMOKE DAMPER
	FIRE DAMPER
SD / SD	SMOKE DAMPER
FC / FC	FLEXIBLE CONNECTION
	EXISTING DUCT
	DUCT TO BE REMOVED

SYMBOL LEGEND

SYMBOL	DESCRIPTION
VALVES, METERS, AND GAUGES	
	SHUT OFF VALVE
	GATE VALVE
	CHECK VALVE
	GLOBE VALVE
	BALL VALVE
	RELIEF VALVE
	PRESSURE REDUCING VALVE
	BUTTERFLY VALVE
	VENTURI
	BALANCING OR PLUG COCK
	EXPANSION VALVE (REFRIG.)
	STRAINER
	GAUGE COCK
	FLEXIBLE CONNECTION
	PRESSURE GAUGE
	THERMOMETER
	REDUCER CONCENTRIC
	REDUCER ECCENTRIC
	REFRIGERANT SITE GLASS
	REFRIGERANT STAINER
	REFRIGERANT FILTER DRIER
	90° ELBOW UP
	90° ELBOW DOWN
	90° TEE UP
	90° TEE DOWN
	UNION
	CAPPED PIPE
	FLOAT AND THERMOSTATIC TRAP
PLUMBING SYMBOLS	
M.H.	MANHOLE
W.H.	WALL HYDRANT
H.B.	HOSE BIBB
	CLEANOUT TO GRADE
	FLOOR CLEANOUT
	WALL CLEANOUT

DEFINITIONS

NOTE: ALL DEFINITIONS MAY NOT BE USED.

INDICATED: THE TERM "INDICATED" REFERS TO GRAPHIC REPRESENTATIONS, NOTES, OR SCHEDULES ON THE DRAWINGS, OTHER PARAGRAPHS OR SCHEDULES IN THE SPECIFICATIONS, AND SIMILAR REQUIREMENTS IN THE CONTRACT DOCUMENTS. WHERE TERMS SUCH AS "SHOWN", "NOTED", "SCHEDULED", AND "SPECIFIED" ARE USED, IT IS TO HELP THE READER LOCATE THE REFERENCE, NO LIMITATION ON LOCATION IS INTENDED.

DIRECTED: TERMS SUCH AS "DIRECTED", "REQUESTED", AUTHORIZED", "SELECTED", "APPROVED", "REQUIRED", AND "PERMITTED" MEAN "DIRECTED BY THE ENGINEER", "REQUESTED BY THE ENGINEER", AND SIMILAR PHRASES.

APPROVE: THE TERM "APPROVED", WHERE USED IN CONJUNCTION WITH THE ENGINEER'S ACTION ON THE CONTRACTOR'S SUBMITTALS, APPLICATIONS, AND REQUESTS, IS LIMITED TO THE ENGINEER'S DUTIES AND RESPONSIBILITIES AS STATED IN GENERAL AND SUPPLEMENTARY CONDITIONS.

FURNISH: THE TERM "FURNISH" IS USED TO MEAN "SUPPLY AND DELIVER TO THE PROJECT SITE, READY FOR UNLOADING, UNPACKING, ASSEMBLY, INSTALLATION, AND SIMILAR OPERATIONS."

INSTALL: THE TERM "INSTALL" IS USED TO DESCRIBE OPERATIONS AT PROJECT SITE INCLUDING THE ACTUAL "UNLOADING, UNPACKING, ASSEMBLY, ERECTION, PLACING, ANCHORING, APPLYING, WORKING TO DIMENSION, FINISHING, CURING, PROTECTING, CLEANING, AND SIMILAR OPERATIONS TO MAKE THE ITEM FULLY OPERATIONAL."

PROVIDE: THE TERM "PROVIDE" MEANS "TO FURNISH AND INSTALL, COMPLETE AND READY FOR THE INTENDED USE."

INSTALLER: AN "INSTALLER" IS THE CONTRACTOR OR AN ENTITY ENGAGED BY THE CONTRACTOR, EITHER AS AN EMPLOYEE, SUBCONTRACTOR, OR SUB-SUBCONTRACTOR, FOR PERFORMANCE OF A PARTICULAR CONSTRUCTION ACTIVITY, INCLUDING INSTALLATION, ERECTION, APPLICATION, AND SIMILAR OPERATIONS. INSTALLERS ARE REQUIRED TO BE EXPERIENCED IN THE OPERATIONS THEY ARE ENGAGED TO PERFORM.

SYMBOL LEGEND

SYMBOL	DESCRIPTION
HVAC PIPING	
TWS	TEMPERED WATER SUPPLY
RL	REFRIGERANT LIQUID
RS	REFRIGERANT SUCTION
D	DRAIN LINE
HG	HOT GAS BYPASS
(E)	EXISTING PIPE
(E)	EXISTING PIPE TO BE REMOVED
PLUMBING PIPING	
CWV	COMBINATION WASTE AND VENT
	SOIL, WASTE – ABOVE GRADE
	SOIL, WASTE – BELOW GRADE
	VENT
	COLD WATER
	HOT WATER
	HOT WATER CIRCULATE
VTR	VENT THRU ROOF
(E)	EXISTING PIPE
(E)	EXISTING PIPE TO BE REMOVED
SS	SANITARY SEWER
W	WATER
G	GAS
HVAC SYMBOLS	
T	THERMOSTAT
S	TEMPERATURE SENSOR
REFERENCE AND LINE SYMBOLS	
# / SHEET	DETAIL INDICATOR: # INDICATES DETAIL NUMBER, SHEET INDICATES DRAWING SHEET WHERE DETAIL IS SHOWN.
# / SHEET	ELEVATION OR SECTION INDICATOR, EXTERIOR: # INDICATES ELEVATION OR SECTION NUMBER, SHEET INDICATES DRAWING SHEET WHERE ELEVATION OR SECTION IS SHOWN.
# / SHEET	ELEVATION OR SECTION INDICATOR, INTERIOR: # INDICATES ELEVATION OR SECTION NUMBER, SHEET INDICATES DRAWING SHEET WHERE ELEVATION OR SECTION IS SHOWN.
100	ROOM OR SPACE NUMBER.
	KEYNOTE INDICATOR.
	REVISION INDICATOR.
CU-1	EQUIPMENT INDICATOR.
P-	PLUMBING FIXTURE INDICATOR.
TYPE / CFM / SIZE	DIFFUSER/GRILLE INDICATOR.
TYPE / SIZE	DIFFUSER/GRILLE INDICATOR.
	BREAK, STRAIGHT
	BREAK, ROUND.
MATCH LINE / SEE XX/X-XXX	MATCH LINE INDICATOR
	HIDDEN FEATURES LINE: HIDDEN, THIN LINE.
	CONTRACT LIMIT LINE: DASHDOT, WIDE LINE.
	NEW CONNECTION POINT TO EXISTING

SHEET INDEX

SHEET NO	SHEET TITLE
ME001	GENERAL NOTES, SYMBOLS & SHEET INDEX
ME501	MECHANICAL DETAILS AND SCHEDULES
MD101	MECHANICAL DEMOLITION FLOOR PLAN
MH101	MECHANICAL FLOOR PLAN
PE501	PLUMBING DETAILS AND SCHEDULES
PD101	PLUMBING DEMOLITION FLOOR PLAN
PL101	PLUMBING FLOOR PLAN & ENLARGED PLUMBING PLANS

GENERAL NOTES (CONT.)

27. DO NOT USE STEEL ROOF DECK TO SUPPORT LOADS FROM PIPING, DUCTWORK OR EQUIPMENT. HANGER LOADS LESS THAN 50 LBS. MAY BE HUNG FROM THE STEEL ROOF DECK IN CASES WHERE HANGING FROM THE STEEL ROOF DECK CANNOT BE AVOIDED. THE ATTACHMENT METHOD MUST DISTRIBUTE THE LOAD ACROSS THE DECK AS APPROVED BY THE STRUCTURAL ENGINEER.
28. PROPERLY LUBRICATE ALL PIECES OF EQUIPMENT BEFORE TURNING THE SYSTEM OVER TO THE OWNER.
29. PREPARE 6 COPIES OF SUBMITTALS IN AN INDEXED, LABELED FOLDER CONTAINING FULL PERFORMANCE, MATERIAL AND INSTALLATION INFORMATION ABOUT ALL EQUIPMENT, PIPING, COMPONENTS AND ACCESSORIES TO BE USED. SUBMITTALS WILL BE CHECKED AT MOST TWICE. TIME SPENT ON SUBSEQUENT SUBMITTALS WILL BE BILLED TO THE CONTRACTOR BY THE ENGINEER AT ITS CURRENT HOURLY RATES.
30. TWO OPERATING AND MAINTENANCE MANUALS SHALL BE PROVIDED IN HARD BACK LOOSE LEAF BINDERS. MANUALS SHALL CONTAIN PRODUCT CUT SHEETS AND OPERATING AND MAINTENANCE INSTRUCTIONS ON ALL EQUIPMENT, ACCESSORIES, FIXTURES, VALVES, ETC., PROVIDED FOR THE PROJECT.
31. UPON COMPLETION OF THE WORK, REMOVE ALL SURPLUS MATERIALS AND RUBBISH. MAKE ALL REQUIRED PATCHING AND REPAIRS OF OTHER TRADES' WORK DAMAGED BY THE DIVISION 15 CONTRACTOR, AND LEAVE THE PREMISES IN A CLEAN, ORDERLY CONDITION.
32. THE DIVISION 15 CONTRACTOR SHALL OPERATE THE SYSTEM AND DEMONSTRATE ALL ASPECTS TO THE ENGINEER AND/OR OWNER, TO PROVE ITS OPERATION. ALL FILTERS USED DURING CONSTRUCTION SHALL BE REPLACED PRIOR TO THE TEST RUN PERIOD.
33. THE DIVISION 15 CONTRACTOR SHALL GUARANTEE THE HVAC SYSTEM FOR A PERIOD OF ONE YEAR FROM THE DATE OF SUBSTANTIAL COMPLETION.
34. THE DIVISION 15 CONTRACTOR SHALL, DURING CONSTRUCTION, MAINTAIN A SET OF AS-BUILT REDLINED RECORD DRAWINGS AT THE PROJECT SITE. ALL CHANGES IN LAYOUT, ROUTING, EQUIPMENT, COMPONENTS, AND ACCESSORIES SHALL BE RECORDED. THESE REDLINES SHALL BE GIVEN TO THE ARCHITECT/ENGINEER AFTER THE FINAL INSPECTION.
35. EXACT ROUTING OF WASTE, GAS, AND WATER SERVICE IS DEPENDENT ON LOCAL SITE CONDITIONS AND MODIFICATIONS IN EQUIPMENT CONNECTIONS. EXACT LOCATION OF EQUIPMENT MAY VARY DEPENDING ON LOCAL CODE, HEALTH DEPARTMENT AND CITY REQUIREMENTS.
36. PROVIDE WALL CLEANOUTS IN ALL VENTS FOR COMBINATION WASTE AND VENT SYSTEMS AS REQUIRED BY LOCAL AND NATIONAL CODES.
37. ALL VENT FITTINGS FOR WASTE SYSTEMS BELOW OVERFLOWS OF FIXTURES SHALL BE DRAINAGE TYPE.
38. CONTRACTOR TO COMPLY WITH THE LATEST ADOPTED PLUMBING CODES WHEN SIZING TRAP ARMS ON COMBINATION WASTE AND VENT SYSTEMS. THE DRAWINGS INDICATE THE WASTE LINE SIZE AND THE SIZE OF THE TRAP REQUIRED.
39. PROVIDE CLEANOUTS IN ACCORDANCE WITH THE REQUIREMENTS OF APPLICABLE CODES. FLOOR CLEANOUTS SHALL BE LOCATED OUT OF TRAFFIC AREAS.
40. LOCATE ALL PLUMBING VENTS AT LEAST 3 FEET ABOVE OR 10 FEET AWAY FROM ALL OUTSIDE AIR INTAKES INTO THE BUILDING. FOR HEALTHCARE APPLICATION, VENTS SHALL BE 25 FT AWAY FROM AIR INTAKES.
41. SEE "PLUMBING FIXTURE SCHEDULE" FOR FIXTURE MAKE AND TYPE, AND SIZE OF INDIVIDUAL WASTE, VENT, AND DOMESTIC WATER PIPING TO FIXTURES.
42. ALL PLUMBING EQUIPMENT SHALL BE LISTED AND LABELED BY AN APPROVED TESTING AGENCY.
43. EQUIPMENT AND INSTALLATION SHALL MEET NATIONAL SANITATION FOUNDATION (NSF) STANDARDS, OR EQUIVALENT.
44. PROVIDE PROPER PROVISIONS FOR EXPANSION OR MOVEMENT OF ALL PIPING.
45. ALL PIPE SHALL BE SECURED BY DOUBLE NUTTING AT THE HANGER ROD ATTACHMENT TO THE STRUCTURE, AND AT THE PIPE HANGER.
46. PROVIDE WATER HAMMER ARRESTORS (SHOCK ABSORBERS) AT ALL PIPE LOCATIONS WHERE VALVE CLOSURES (SUCH AS FLUSH VALVES) MAY CAUSE WATER HAMMER OR RESULT IN EXCESSIVE PIPE VIBRATION OR MOVEMENT.
47. ALL CEILING DIFFUSERS SHOWN AS SUCH ARE CD-1, CFM AS NOTED, UNLESS OTHERWISE NOTED. REFER TO DETAIL A2/ME501. (CFM)
48. ALL CEILING RETURN GRILLES SHOWN AS SUCH ARE RG-1 UNLESS OTHERWISE NOTED.
49. ALL CEILING EXHAUST GRILLES SHOWN AS SUCH ARE EG-1, CFM AS NOTED, UNLESS OTHERWISE NOTED. (CFM)
50. DO NOT ROUTE DUCTS AND PIPES ABOVE ELECTRICAL PANELS. ALL ELECTRICAL PANELS MUST HAVE CLEAR ACCESS SPACE IN FRONT OF PANEL 4'-0" DEEP AND 6'-6" HIGH. DO NOT ROUTE DUCTS AND PIPES IN ELECTRICAL ROOMS, EXCEPT DUCTS AND PIPES SERVING THE ROOM.
51. COORDINATE EXACT LOCATIONS OF CEILING DIFFUSERS AND GRILLES WITH ARCHITECTURAL REFLECTED CEILING PLAN.
52. ALL DUCT DIMENSIONS ARE INSIDE FREE AREA DIMENSIONS. ADJUST SHEET METAL DIMENSION FOR LINED DUCT.
53. IF CONTRACTOR ENCOUNTERS MATERIAL WHICH MAY CONTAIN ASBESTOS IMMEDIATELY STOP WORK IN THIS AREA AND NOTIFY THE OWNER.
54. PROVIDE CEILING ACCESS PANELS AS REQUIRED WHERE MECHANICAL EQUIPMENT, VALVES, VAV BOXES, FIRE DAMPERS, ETC. ARE LOCATED ABOVE INACCESSIBLE CEILINGS.
55. THE EQUIPMENT INSTALLER IS TO APPLY AND SIGN A CERTIFICATION LABEL TO EACH GAS-FIRED APPLIANCE, STATING THE APPLIANCE HAS BEEN ADJUSTED OR MODIFIED PER MANUFACTURER'S REQUIREMENTS FOR OPERATION AT THE PROJECT ALTITUDE AND WITH THE BTU-CONTENT OF THE AVAILABLE FUEL-GAS.

GENERAL NOTES

1. PROVIDE ALL LABOR, MATERIALS, AND EQUIPMENT NECESSARY TO CONSTRUCT A COMPLETE, OPERATIONAL HVAC AND PLUMBING SYSTEM FOR THE ENTIRE PROJECT AS SHOWN ON THESE DRAWINGS, INCLUDING ALL NECESSARY FEES AND PERMITS.
2. THE ENTIRE INSTALLATION SHALL CONFORM TO THE REQUIREMENTS OF THE MOST RECENTLY ADOPTED BUILDING CODE, MECHANICAL CODE, PLUMBING CODE, ELECTRICAL CODE, AND ALL OTHER APPLICABLE CITY, COUNTY, SCHOOL DISTRICT, STATE, AND FEDERAL CODES AND REGULATIONS IN EFFECT AT THE DATE OF THE BID. CONFORM TO ANY CODES, RULES, REGULATIONS AND REQUIREMENTS THAT THE PROJECT OWNER HAS.
3. PRIOR TO FABRICATION AND INSTALLATION, COORDINATE THE INSTALLATION OF ALL HVAC PIPING, DUCTWORK, AND EQUIPMENT WITH PLUMBING PIPING, PLUMBING EQUIPMENT, REFRIGERATION TRENCHES AND PIPING, FIRE PROTECTION PIPING AND ALL OTHER TRADES INCLUDING BUT NOT LIMITED TO: THE MECHANICAL CONTRACTOR, REFRIGERATION CONTRACTOR, ELECTRICAL CONTRACTOR, FIRE PROTECTION CONTRACTOR, GENERAL CONTRACTOR, AND ANY CONTRACTOR HIRED DIRECTLY BY THE OWNER. WHERE CONFLICTS MAY OCCUR, THEY SHALL BE RESOLVED PRIOR TO INSTALLATION.
4. THE DRAWINGS SHOW THE GENERAL DESIGN, ARRANGEMENTS AND THE EXTENT OF THE SYSTEM. IT SHALL BE THE WORK OF THE CONTRACTOR TO MAKE SUCH SLIGHT ALTERATIONS AS MAY BE NECESSARY TO MAKE THE SYSTEM COMPLETE AND OPERATIONAL IN ACCORDANCE WITH THE DESIGN INTENT. MAJOR DEVIATIONS SUCH AS CHANGES IN COMPONENT SIZES, WEIGHTS, QUANTITIES, OR MATERIAL REQUIRE PRIOR APPROVAL BY THE CONSULTING ENGINEER.
5. ALL HVAC AND PLUMBING INFORMATION IS NOT SHOWN ON THE DRAWINGS. THE CONTRACTOR SHALL BE RESPONSIBLE FOR COORDINATING INFORMATION ON ALL OTHER CONSTRUCTION DOCUMENTS INCLUDING ARCHITECTURAL, STRUCTURAL, MECHANICAL, ELECTRICAL AND REFRIGERATION DRAWINGS.
6. THE WORKING DRAWINGS ARE DIAGRAMMATIC. BECAUSE OF THE SMALL SCALE OF THE DRAWINGS, THEY DO NOT SHOW EVERY OFFSET, BEND OR ELBOW NECESSARY FOR THE COMPLETE INSTALLATION IN THE SPACE PROVIDED. ALL LOCATIONS FOR HVAC EQUIPMENT AND PIPING SHALL BE CHECKED AND COORDINATED WITH THE ARCHITECTURAL, MECHANICAL, STRUCTURAL AND ELECTRICAL DRAWINGS.
7. SPACE ABOVE ALL CEILINGS IS LIMITED. CAREFUL COORDINATION IS REQUIRED WITH ALL TRADES BEFORE ANY PIPE, DUCT, OR EQUIPMENT IS ORDERED AND/OR INSTALLED. ANY CONFLICTS AND/OR CHANGES FOUND DURING INSTALLATION THAT RESULT FROM LACK OF COORDINATION BY THE CONTRACTORS DURING THE SHOP DRAWING PROCESS ARE THE RESPONSIBILITY OF THE CONTRACTOR.
8. 1/8" SCALE SHOP DRAWINGS (SUBMITTED FOR APPROVAL) ARE REQUIRED FOR ALL DUCTWORK AND PIPING SYSTEMS.
9. THE DRAWINGS AND SPECIFICATIONS HAVE BEEN PREPARED TO SUPPLEMENT EACH OTHER AND THEY SHALL BE INTERPRETED AS AN INTEGRAL UNIT WITH THE ITEMS SHOWN ON ONE AND NOT THE OTHER BEING FURNISHED AND INSTALLED AS THOUGH SHOWN AND CALLED OUT IN BOTH.
10. DETAILS: THE CONTRACTOR IS RESPONSIBLE TO REVIEW AND USE WHERE APPROPRIATE ALL OF THE MECHANICAL DETAILS SHOWN ON THE DRAWINGS. DETAILS MAY OR MAY NOT BE CALLED OUT ON THE DRAWINGS WITH SYMBOLS OR KEYED NOTES. ANY CHANGES RESULTING FROM FAILURE TO INSTALL THE MECHANICAL SYSTEM WITHOUT USING THE INCLUDED DETAILS IS THE RESPONSIBILITY OF THE CONTRACTOR.
11. PIPING SCHEMATICS: THE CONTRACTOR IS RESPONSIBLE TO REVIEW THE PIPING SCHEMATICS INCLUDED WITH THE DRAWINGS FOR PIPING CONNECTIONS TO ALL MECHANICAL EQUIPMENT. THE PIPING SCHEMATICS SHOW DETAILED CONNECTIONS INCLUDING NECESSARY VALVES, FITTINGS, PRESSURE AND TEMPERATURE GAUGES, ETC., THAT ARE NOT SHOWN ON THE PIPING PLANS. ANY CHANGES RESULTING FROM FAILURE TO INSTALL THE MECHANICAL SYSTEM WITHOUT USING THE INCLUDED PIPING SCHEMATICS IS THE RESPONSIBILITY OF THE CONTRACTOR.
12. THE STRUCTURE SHOWN ON ALL DETAILS MAY OR MAY NOT PERTAIN TO A PORTION OR ANY PORTION OF THE BUILDING. COORDINATE MOUNTING REQUIREMENTS WITH ARCHITECTURAL AND STRUCTURAL DRAWINGS.
13. ANY PART OF THIS INSTALLATION THAT FAILS, IS UNFIT, OR BECOMES DAMAGED DURING CONSTRUCTION SHALL BE REPAIRED OR REPLACED BY THE CONTRACTOR AT NO ADDITIONAL COST TO THE OWNER.
14. COORDINATE THE RETURN OF ALL MECHANICAL AND PLUMBING EQUIPMENT REMOVED DURING DEMOLITION WITH THE OWNER'S REPRESENTATIVE.
15. ALL EQUIPMENT SHALL PROVIDE THE SCHEDULED PERFORMANCE AT THE SITE ALTITUDE.
16. EQUIPMENT MODEL NUMBERS IN SCHEDULES ARE SHOWN TO ESTABLISH THE TYPE OF PRODUCT THAT HAS TO BE USED. THE SELECTED PRODUCT MUST MEET THE SCHEDULED PERFORMANCE DATA. THIS MAY REQUIRE A DIFFERENT MODEL NUMBER TO THAT SCHEDULED.
17. ALL EQUIPMENT SHALL BE INSTALLED IN STRICT ACCORDANCE WITH THE EQUIPMENT MANUFACTURER'S RECOMMENDATIONS. PROVIDE ALL FITTINGS, TRANSITIONS, VALVES, DAMPERS, AND OTHER DEVICES AND ACCESSORIES REQUIRED FOR A COMPLETE, WORKABLE INSTALLATION.
18. THE DIVISION 15 CONTRACTOR SHALL FURNISH ALL REQUIRED MOTORS. ALL MOTOR STARTING EQUIPMENT, WHEN NOT A PART OF THE EQUIPMENT, WILL BE FURNISHED BY THE ELECTRICAL CONTRACTOR.
19. EXISTING INTERIOR PIPING, EQUIPMENT, AND DUCTWORK HAS BEEN LOCATED IN AN APPROXIMATE WAY ONLY. THE CONTRACTOR SHALL VERIFY LOCATIONS AND POINTS OF CONNECTION AND PIPE ROUTING THROUGH EXISTING CONDITIONS PRIOR TO COMMENCING WORK. THE CONTRACTOR SHALL PERFORM THE WORK IN A MANNER THAT WILL CAUSE A MINIMUM DISRUPTION TO BUILDING TENANT USE AND SHALL COORDINATE THE WORK WITH THE BUILDING OWNER'S REPRESENTATIVE.
20. THE CONTRACTOR IS RESPONSIBLE FOR EQUIPMENT CHECK-IN, SAFEKEEPING, AND DAMAGE.
21. DO NOT ROUTE DUCTS AND PIPES ABOVE ELECTRICAL PANELS. ALL ELECTRICAL PANELS MUST HAVE CLEAR ACCESS SPACE IN FRONT OF PANEL 4'-0" DEEP AND 6'-6" HIGH DO NOT ROUTE DUCT AND PIPES IN ELECTRICAL ROOMS, EXCEPT DUCTS AND PIPES SERVING THE ROOM.
22. COORDINATE EXACT LOCATIONS OF CEILING DIFFUSERS AND GRILLES WITH ARCHITECTURAL REFLECTED CEILING PLAN.
23. ALL FIRE DAMPERS SHOWN ARE 1-1/2 HOUR UNLESS OTHERWISE NOTED.
24. IF CONTRACTOR ENCOUNTERS MATERIAL WHICH MAY CONTAIN ASBESTOS, IMMEDIATELY STOP WORK IN THIS AREA AND NOTIFY THE OWNER.
25. PROVIDE CEILING ACCESS PANELS AS REQUIRED WHERE MECHANICAL EQUIPMENT, VALVES, VAV BOXES, FIRE DAMPERS, ETC. ARE LOCATED ABOVE INACCESSIBLE CEILINGS.
26. ENCLOSE ALL DUCT AND FLUE PENETRATIONS THROUGH 1 HOUR ROOF ASSEMBLIES WITH 2 SHEET ROCK LAYERS FROM SHEET ROCK CEILING AT BOTTOM OF ROOF TRUSSES TO ROOF DECK.

Axis Architects
610 " I " STREET SALT LAKE CITY UTAH 84103 P 355-3003 F 355-6578

DFCM

LICENSED PROFESSIONAL ENGINEER
No. 277596
JONATHAN T. JENSEN
7/10/07
STATE OF UTAH

DRIVERS LICENSE OFFICE State Fairpark

Conference Center - 155 N.1000 West, SLC. Utah 84116

Construction Documents

Revision #	Date
.	
.	
.	
.	
.	

Axis Job #	0518
Owner #	DFCM # 07009370
Date	7-10-07
Drawn	ARA
Checked	JTJ

MECHANICAL NOTES, SYMBOLS & SHEET INDEX

ME001

File Name: P:\2007\20070224\1Drawings\Sheet\24ME001.dwg Last Plotted: 2007/07/11 @ 1:17 PM By: ara

ROOFTOP UNIT SCHEDULE

SYMBOL	MANUFACTURER	MODEL NO.	LOCATION	NOMINAL TONS COOLING	TOTAL CFM	MIN O.A. CFM	ESP (IN WG)	COOLING TOTAL CAPACITY (MBH)	COOLING SENSIBLE CAPACITY (MBH)	COOLING EDB (F)	COOLING EWB (F)	COOLING O.A. (F)	HEATING INPUT (MBH)	HEATING OUTPUT (1) (MBH)	ELECTRICAL VOLT	ELECTRICAL PHASE	ELECTRICAL Hz.	ELECTRICAL MCA	SIZE (IN) L	SIZE (IN) W	SIZE (IN) H	OPERATING WEIGHT (LBS)	COMMENTS
RTU-1	CARRIER	48PGDC04	EAST EXTERIOR	3	1490	190	0.75	34.90	26.87	78.6	63.8	96	90.8	61	208	3	60	25	90.0	53.9	44.5	786	(2) (3) (4) (7) (8)
RTU-2	CARRIER	48PGDC05	NORTH EXTERIOR	4	1820	610	0.75	45.13	40.51	82.3	63.4	96	151.8	102	208	3	60	29	90.0	53.9	44.5	901	(2) (3) (4) (7) (8)
RTU-3	CARRIER	48PGDC14	WAITING	12.5	5000	1400	1.00	144.35	121.13	81.6	63.5	96	206.8	139	208	3	60	69	102.6	63.2	52.1	1400	(2) (3) (4) (5) (6) (7) (8)

(1) MBH OUTPUT AT 4300 FT ELEVATION
(2) 100% OUTSIDE AIR ECONOMIZER AND 100% CENTRIFUGAL POWER EXHAUST
(3) PROVIDE WITH FACTORY STANDARD ROOF CURB
(4) PROVIDE WITH FACTORY INSTALLED FUSED DISCONNECT SWITCH
(5) PROVIDE WITH DUCT MOUNTED SMOKE DETECTORS (120V) & CONTROL RELAY FOR FAN SHUTDOWN.
(6) RTU-3 TO BE BID AS AN ALTERNATE
(7) ROOFTOP UNIT MUST MEET ROCKY MOUNTAIN POWER FINANSWER EXPRESS REQUIREMENTS
(8) CONNECT TO EXISTING GAS SUPPLY.

EXHAUST FAN SCHEDULE

SYM	MANUFACTURER	MODEL NO.	CFM	STATIC PRESSURE IN WG.	WATTS OR H.P.	RPM	VOLTS/ PHASE/ CYCLE	AREA SERVED	CONTROL METHOD	COMMENTS
EF-1	LOREN-COOK	100 ACEB	610	0.38	0.167	1458	120/1/60	NEW RESTROOMS	A	(1) (2)

(1) ALL CAPACITIES AT 4500 FT. ELEVATION.
(2) ROOF MOUNTED EXHAUST FAN. COMPLETE WITH PRE-FAB CURB, MOTORIZED BACKDRAFT DAMPER BIRD SCREEN, INTEGRAL THERMAL OVERLOAD PROTECTION AND SERVICE DISCONNECT.
(A) CONTROL: ATC.

CONDENSING UNIT SCHEDULE

SYMBOL	MANUFACTURER	MODEL	BTU * CAPACITY	REFRIGERANT TYPE	VOLTS/PHASE/CYCLE	MCA	COMMENTS
CU-1	MITSUBISHI	MUY-A24NA	22,000	R410A	208/1/60	17	(1)

(1) INSTALL ACCORDING TO MANUFACTURER INSTRUCTIONS.

SPLIT SYSTEM DUCTLESS AIR CONDITIONER

SYMBOL	MANUFACTURER & MODEL NO.	LOCATION	COOLING CAPACITY (BTU/H)	ELECTRICAL VOLTS/PHASE/CYCLE	MIN. AMP	COMMENTS
HP-1	MITSUBISHI MSY-A24NA	ELECTRICAL ROOM	22,000	208/1/60	1.0	(1) (2) (3) (4) (5)

(1) CONDITIONS – 80 DEG F DB 62 DEG F WB EAT, 96 DEG F FD 65 DEG F WB AMBIENT
(2) PROVIDE REMOTE PROGRAMMABLE THERMOSTAT & LOW AMBIENT KIT.
(3) INSTALL ACCORDING TO MANUFACTURER INSTRUCTIONS.
(4) PROVIDE WITH CONDENSATE PUMP OPTION.
(5) DESIGN BASIS: NOMINAL 2 TONS COOLING.

GRILLES, REGISTERS AND DIFFUSERS

SYM	MANUF	MODEL	SIZE	MAX CFM	MAX NC	DESCRIPTION
CD-1	EH PRICE	SCDA	6 x 6 9 x 9 12 x 12 15 x 15 18 x 18	125 250 425 625 900	30	LOUVER FACE (4-CONE) CEILING DIFFUSERS. ADJUSTABLE AIR PATTERN, C.W./O.B.D. FRAME SHALL BE FOR SURFACE OR LAY-IN MOUNTING AS REQUIRED BY CEILING TYPE. LAY-IN FRAMES SHALL BE 24" x 24", 24" x 12" OR 12" x 12" AS REQUIRED TO FIT CEILING TILE SPACE AVAILABLE. PROVIDE ROUND NECK ADAPTER.
RG-1	EH PRICE	PDDR	10 x 10 12 x 12 14 x 14 15 x 15	350 500 680 780	20	PERFORATED FACE EXHAUST AIR UNIT, REMOVABLE FACE & CORE. FRAME SHALL BE FOR SURFACE OR LAY-IN MOUNTING AS REQUIRED BY CEILING TYPE. LAY-IN FRAMES SHALL BE 24" x 24", 24" x 12", 48" x 24" OR 12" x 12" AS REQUIRED TO FIT CEILING TILE SPACE AVAILABLE.
EG-1	EH PRICE	PDDR	10 x 10 12 x 12 14 x 14 15 x 15 48 x24	350 500 680 780 1200	20	PERFORATED FACE EXHAUST AIR UNIT, REMOVABLE FACE & CORE. FRAME SHALL BE FOR SURFACE OR LAY-IN MOUNTING AS REQUIRED BY CEILING TYPE. LAY-IN FRAMES SHALL BE 24" x 24", 24" x 12" OR 12" x 12" AS REQUIRED TO FIT CEILING TILE SPACE AVAILABLE.

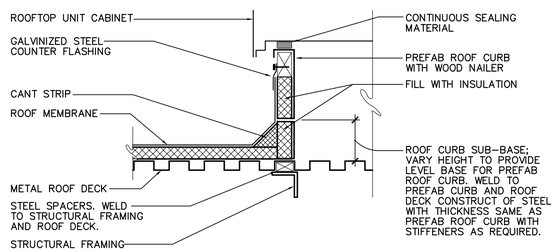

NOTE: ANCHOR ROOFTOP UNIT TO PREFAB ROOF CURB PER SEISMIC RESTRAINT REQUIREMENTS.

B2 ROOFTOP UNIT CURB DETAIL
SCALE: NOT TO SCALE

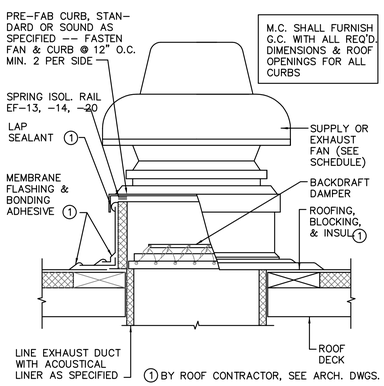

A1 ROOF FAN
NOT TO SCALE

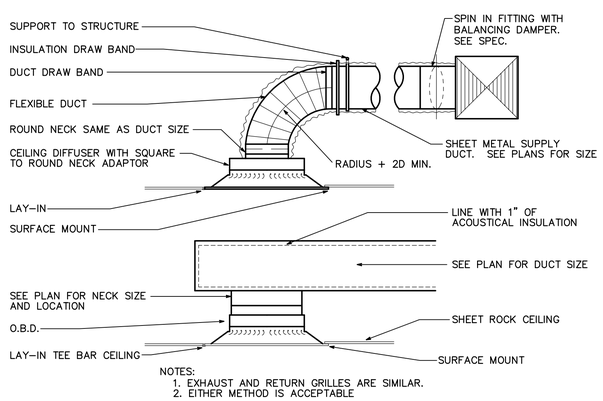

NOTES:
1. EXHAUST AND RETURN GRILLES ARE SIMILAR.
2. EITHER METHOD IS ACCEPTABLE

A2 CEILING DIFFUSER DETAIL
SCALE: NOT TO SCALE

Axis Architects
610 " I " STREET SALT LAKE CITY UTAH 84103 P 355-3003 F 355-6578

LICENSED PROFESSIONAL ENGINEER No. 277596 JONATHAN T. JENSEN 7/10/07 STATE OF UTAH

DRIVERS LICENSE OFFICE State Fairpark
Conference Center - 155 N.1000 West, SLC. Utah 84116
Construction Documents

Revision # Date

Axis Job # 0518
Owner # DFCM # 07009370
Date 7-10-07
Drawn ARA
Checked JTJ

MECHANICAL DETAILS AND SCHEDULES

ME501

File Name: P:\2007\20070224\1Drawings\Sheet\24ME501.dwg Last Plotted: 2007/07/12 @ 1:11 PM By: ara

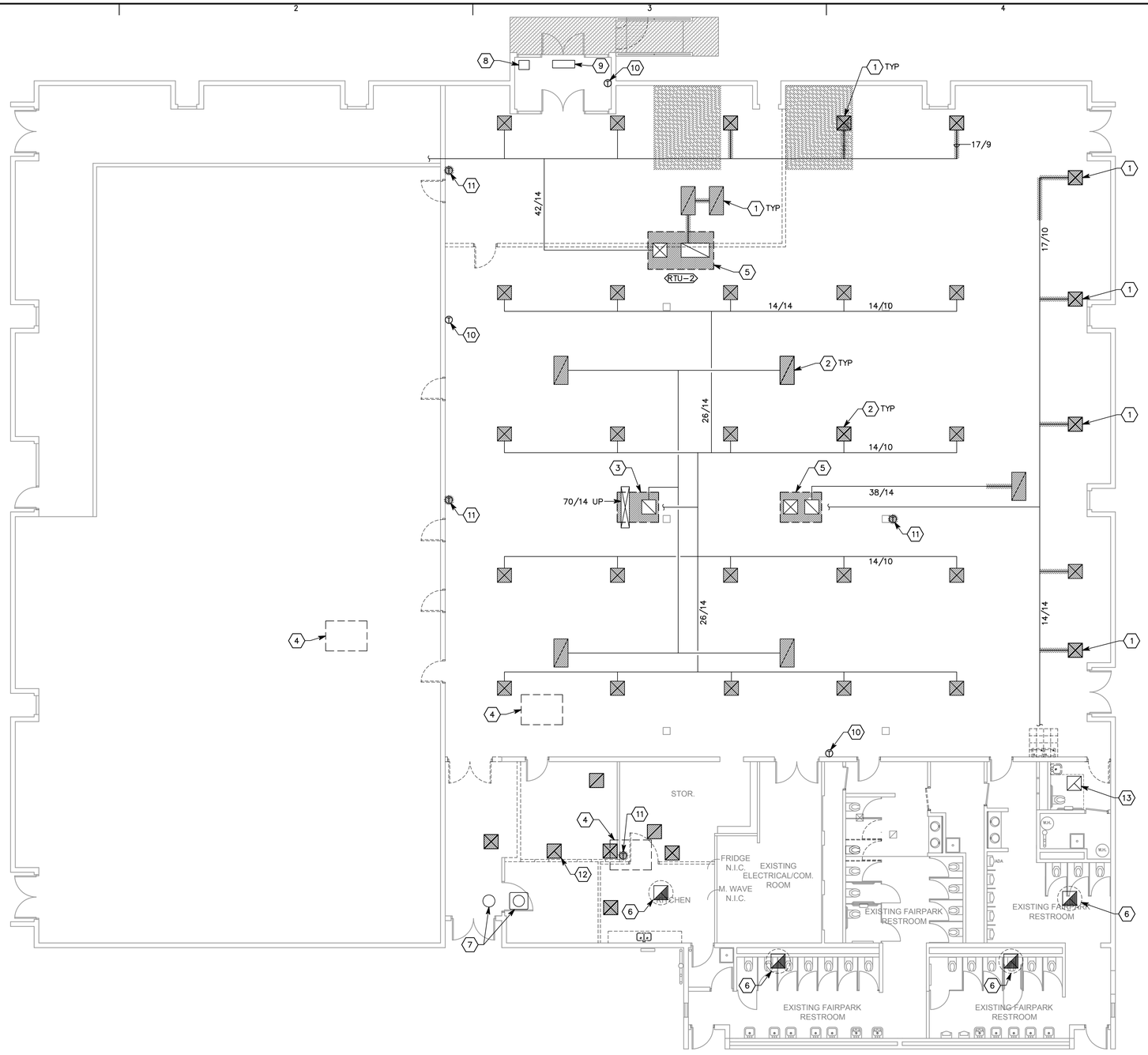

A3 MECHANICAL DEMOLITION FLOOR PLAN

SCALE: 1/8"=1'-0"

PROJECT NORTH

SHEET KEYNOTES

1. REMOVE EXISTING DIFFUSER AND BRANCH DUCT BACK TO ACTIVE MAIN AND CAP.
2. REMOVE ALL EXISTING DIFFUSERS AND CAP DUCT.
3. PROVIDE ALTERNATE BID TO REMOVE EXISTING ROOFTOP UNIT.
4. EXISTING ROOFTOP UNIT TO REMAIN.
5. REMOVE EXISTING ROOFTOP UNIT.
6. EXISTING EXHAUST FAN TO REMAIN.
7. EXISTING CONDENSING UNIT TO REMAIN.
8. EXISTING UNIT HEATER TO REMAIN.
9. EXISTING CABINET UNIT HEATER TO REMAIN.
10. EXISTING THERMOSTAT TO REMAIN.
11. REMOVE EXISTING THERMOSTAT.
12. REMOVE EXISTING EXHAUST GRILLE AND ASSOCIATED DUCT BACK TO ACTIVE MAINS AND CAP.
13. EXISTING EXHAUST GRILLE TO REMAIN.

Axis Architects
610 "I" STREET SALT LAKE CITY UTAH 84103 P 355-3003 F 355-6578

LICENSED PROFESSIONAL ENGINEER No. 277596 JONATHAN T. JENSEN 7/10/07 STATE OF UTAH

DRIVERS LICENSE OFFICE State Fairpark

Conference Center - 155 N.1000 West, SLC. Utah 84116

Construction Documents

Revision # Date

Axis Job # 0518
Owner # DFCM # 07009370
Date 7-10-07
Drawn ARA
Checked JTJ

MECHANICAL
DEMOLTION FLOOR PLAN

MD101

File Name: P:\2007\20070224\1Drawings\Sheet\24MD101.dwg Last Plotted: 2007/07/11 @ 1:17 PM By: ara

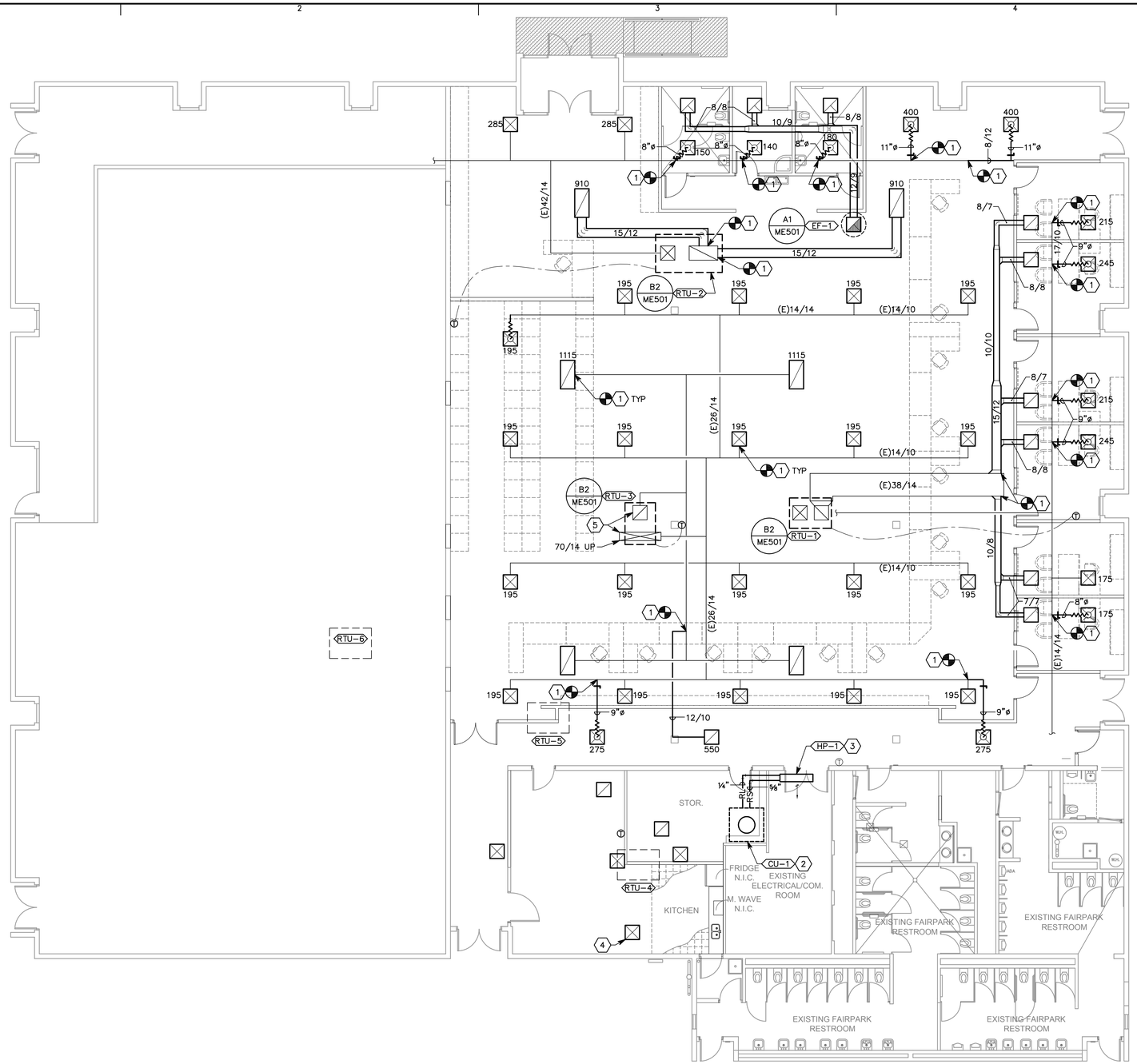

B3 MECHANICAL FLOOR PLAN

SCALE: 1/8"=1'-0"

PROJECT NORTH

SHEET KEYNOTES

1. CONNECT TO EXISTING DUCT.
2. LOCATE CONDENSING UNIT ON ROOF.
3. LOCATE DUCTLESS COOLING UNIT ABOVE DOOR. PIPE CONDENSATE TO MOP SINK.
4. PROVIDE NEW DIFFUSERS AND GRILLES CONNECTED TO DUCT AT PREVIOUS LOCATIONS. PROVIDE ADJUSTMENT AS NECESSARY TO MATCH CEILING GRID.
5. PATCH EXISTING ROOF PENETRATIONS.

Axis Architects
610 "I" STREET SALT LAKE CITY UTAH 84103 P 355-3003 F 355-6578

DFCM

LICENSED PROFESSIONAL ENGINEER
No. 277596
JONATHAN T. JENSEN
7/10/07
STATE OF UTAH

DRIVERS LICENSE OFFICE State Fairpark

Conference Center - 155 N.1000 West, SLC. Utah 84116

Construction Documents

Revision #	Date
.	
.	
.	
.	

Axis Job # 0518
Owner # DFCM # 07009370
Date 7-10-07
Drawn ARA
Checked JTJ

MECHANICAL FLOOR PLAN

MH101

File Name: P:\2007\20070224\1Drawings\Sheet\24MH101.dwg Last Plotted: 2007/07/12 @ 3:20 PM By: ara

PLUMBING FIXTURE SCHEDULE

FIX NO.	FIXTURE	WASTE	TRAP	VENT	HW	CW	COMMENTS
WC	WATER CLOSET	4"	–	2"	–	1"	
WC–A	ACCESSIBLE WATER CLOSET	4"	–	2"	–	1"	
UR	ACCESSIBLE URINAL	2"	–	1–1/2"	–	3/4"	
L	ACCESSIBLE LAVATORY	1–1/2"	1–1/4"	1–1/2"	1/2"	1/2"	
BS	BREAKROOM SINK	2"	1–1/2"	1–1/2"	1/2"	1/2"	
IMB	ICE MAKER BOX	–	–	–	–	1/2"	
MS	MOP SINK	3"	1–1/2"	1–1/2"	1/2"	3/4"	
EWC	WATER COOLER	1–1/2"	1–1/4"	1–1/2"	–	1/2"	
D	FLOOR DRAIN	2"	1–1/2"	1–1/2"	–	–	

DOMESTIC HOT WATER EXPANSION TANK

SYMBOL	MANUFACTURER	MODEL NO.	MINIMUM ACCEPTANCE FACTOR	GALLONS TOTAL VOLUME	INITIAL FILL PRESSURE	COMMENTS
DET	AMTROL	ST–5	0.45	2	45 PSIG	

ELECTRIC DOMESTIC HOT WATER HEATER

SYMBOL	MANUFACTURER	MODEL NO.	TANK CAPACITY GALLONS	INPUT KW	VOLTS/ PHASE/ CYCLE	RECOVERY RATE GPH	WATER TEMP IN/OUT	COMMENTS
WH	AOSMITH	DEL–20	20	4	208/3/60	20	40/120	

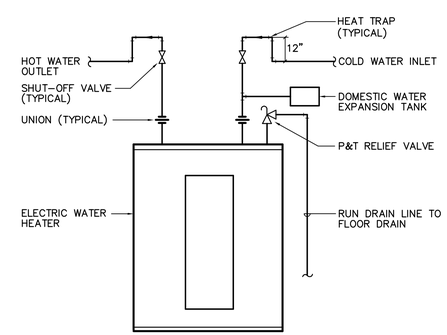

A5 WATER HEATER DETAIL
SCALE: NOT TO SCALE

Axis Architects
610 " 1 " STREET SALT LAKE CITY UTAH 84103 P 355–3003 F 355–8578

LICENSED PROFESSIONAL ENGINEER
No. 277596
JONATHAN T. JENSEN
7/10/07
STATE OF UTAH

DRIVERS LICENSE OFFICE State Fairpark

Conference Center - 155 N.1000 West, SLC. Utah 84116

Construction Documents

Revision # Date

Axis Job # 0518
Owner # DFCM # 07009370
Date 7-10-07
Drawn ARA
Checked JTJ

PLUMBING
DETAILS AND SCHEDULES

PE501

File Name: P:\2007\20070224\1Drawings\Sheet\24PE501.dwg Last Plotted: 2007/07/11 @ 1:16 PM By: ara

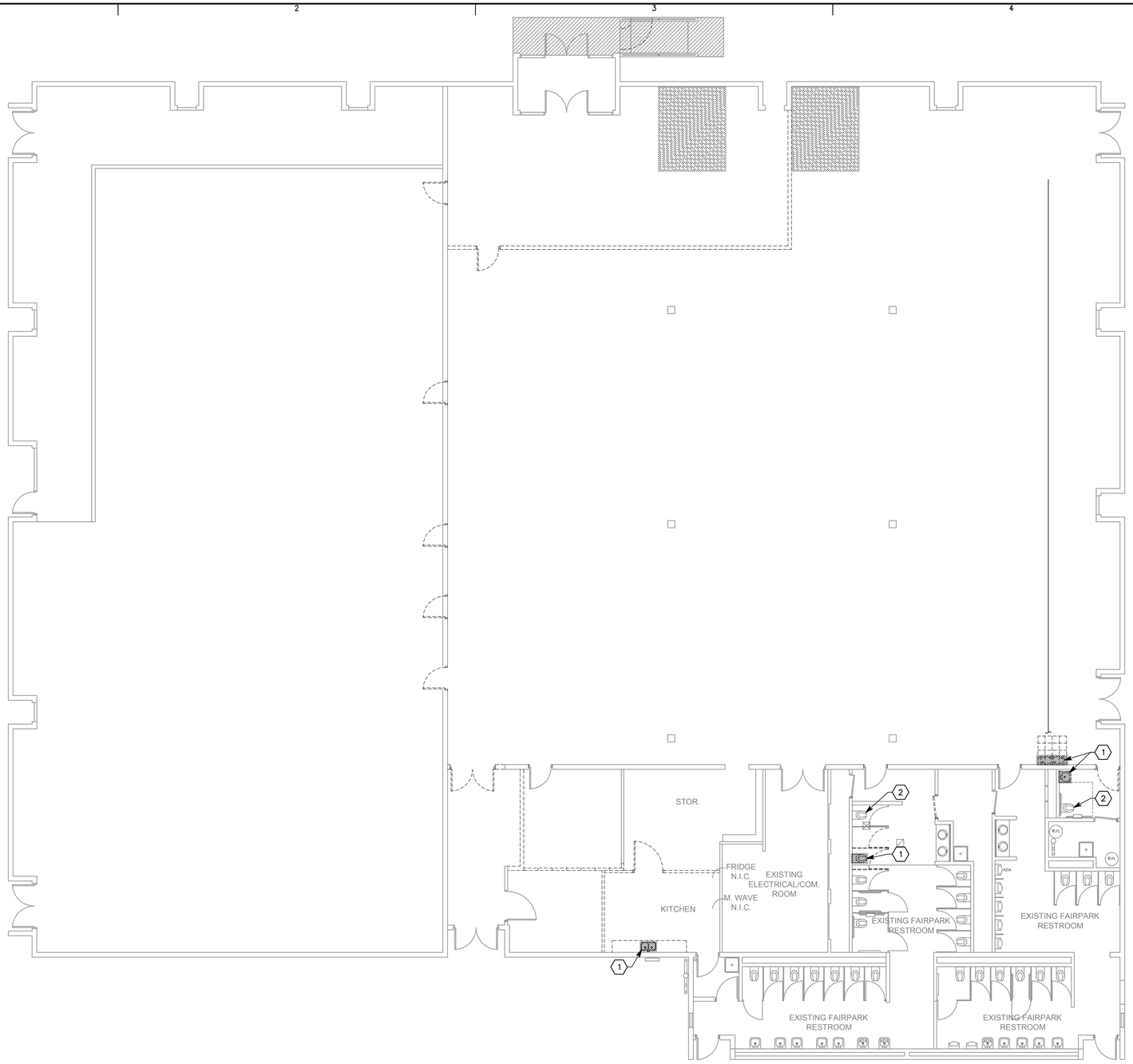

A3 PLUMBING DEMOLITION FLOOR PLAN

SCALE: 1/8"=1'-0"

PROJECT NORTH

SHEET KEYNOTES

1. REMOVE FIXTURE AND ASSOCIATED PLUMBING BACK TO ACTIVE MAIN AND CAP.
2. EXISTING FIXTURE TO REMAIN.

Axis Architects
610 " I " STREET SALT LAKE CITY UTAH 84103 P 355-3003 F 355-8578

LICENSED PROFESSIONAL ENGINEER No. 277596 JONATHAN T. JENSEN 7/10/07 STATE OF UTAH

DRIVERS LICENSE OFFICE State Fairpark

Conference Center - 155 N.1000 West, SLC. Utah 84116

Construction Documents

Revision #	Date
.	
.	
.	
.	
.	

Axis Job #	0518
Owner #	DFCM # 07009370
Date	7-10-07
Drawn	ARA
Checked	JTJ

PLUMBING

DEMOLITION FLOOR PLAN

PD101

File Name: P:\2007\20070224\1Drawings\Sheet\24PD101.dwg Last Plotted: 2007/07/11 @ 1:17 PM By: ara

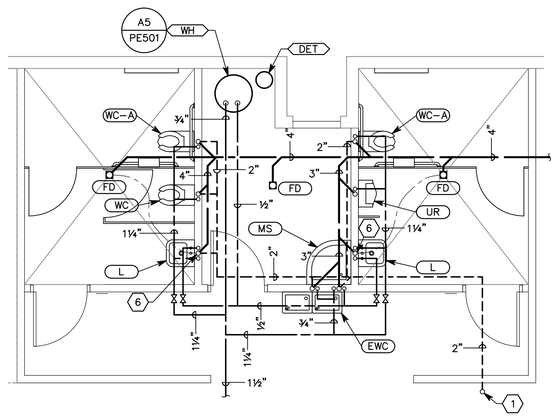

C1 ENLARGED PLUMBING FLOOR PLAN

SCALE: 1/4"=1'-0"

PROJECT NORTH

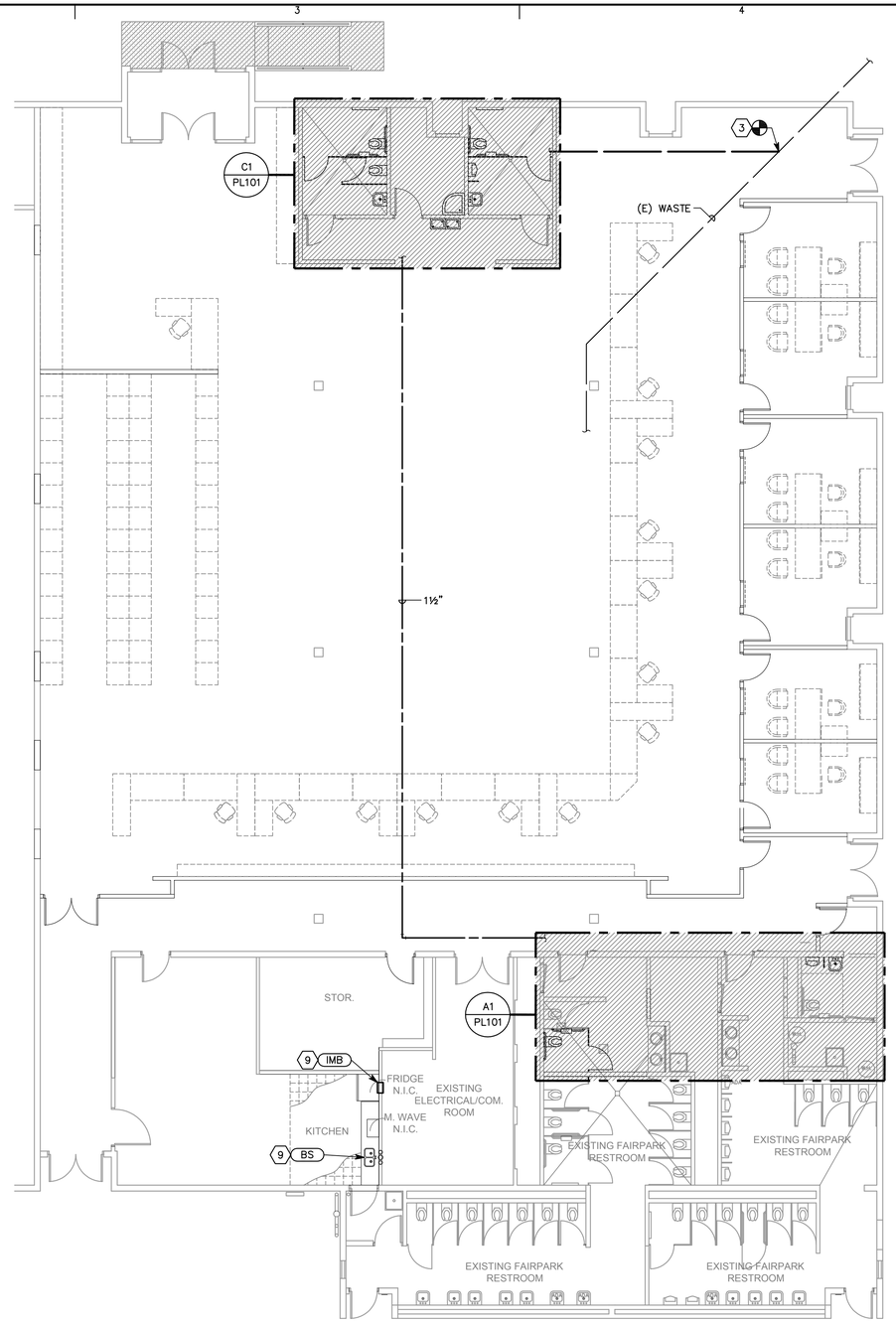

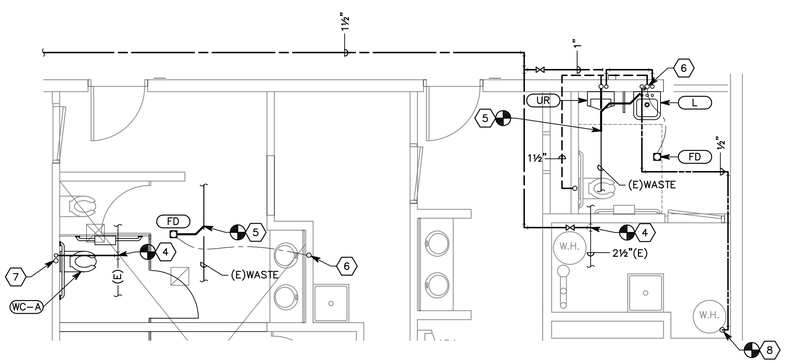

A1 ENLARGED PLUMBING FLOOR PLAN

SCALE: 1/4"=1'-0"

PROJECT NORTH

A3 PLUMBING FLOOR PLAN

SCALE: 1/8"=1'-0"

PROJECT NORTH

SHEET KEYNOTES

1. 2" VTR.
2. CONNECT TO EXISTING COLD WATER.
3. CONNECT TO EXISTING WASTE. FIELD VERIFY EXACT LOCATION OF EXISTING WASTE PIPING. SAW CUT EXISTING FLOOR AS NECESSARY TO MAKE CONNECTION.
4. CONNECT TO EXISTING COLD WATER.
5. CONNECT TO EXISTING WASTE. SAW CUT EXISTING FLOOR AS NECESSARY TO MAKE CONNECTION.
6. PROVIDE AND INSTALL NEW JR. SMITH FIGURE 2698 TRAP PRIMER UNDER LAVATORY AND CONNECT TO FLOOR DRAIN.
7. CONNECT WASTE AND VENT FOR NEW WATER CLOSET TO EXISTING ADJACENT PLUMBING.
8. CONNECT TO EXISTING HOT WATER.
9. CONNECT PLUMBING TO ADJACENT MOP SINK.

Axis Architects
610 " I " STREET SALT LAKE CITY UTAH 84103 P 355-3003 F 355-6578

LICENSED PROFESSIONAL ENGINEER
No. 277596
JONATHAN T. JENSEN
7/10/07
STATE OF UTAH

DRIVERS LICENSE OFFICE State Fairpark

Conference Center - 155 N.1000 West, SLC. Utah 84116

Construction Documents

Revision #	Date
.	
.	
.	
.	
.	

Axis Job #	0518
Owner #	DFCM # 07009370
Date	7-10-07
Drawn	ARA
Checked	JTJ

PLUMBING FLOOR PLAN

PL101

File Name: P:\2007\20070224\1Drawings\Sheet\24PL101.dwg Last Plotted: 2007/07/11 @ 1:16 PM By: ara

FIXTURE SCHEDULE

TYPE	DESCRIPTION	CATALOG NUMBER	VOLTS	LAMPS
B	4' STRIP FLUORESCENT WITH WIRE GUARD	LITHONIA: C 232 120 WGCUN COLUMBIA: CS4-232-EBB120-GLR-CSWG4	120	(2) F32 T8 835K
D1	RECESSED FLUORESCENT DOWNLIGHT, 6" APERATURE	LITHONIA: AF 1/26TRT 6AR 120	120	(1) 26W TRT 835K
G1	2X4 RECESSED ACRYLIC LENS TROFFER GRID MOUNT, 3-LAMP, ELECTRONIC BALLAST	LITHONIA: 2SP8 G 3 32 A12125 120 1/3 GEB COLUMBIA: ST824-332G-FAA12.125-3EBB120-GLR	120	(3) F32 T8 835K
G1E	SAME AS G1 WITH BATTERY PACK	LITHONIA: 2SP8 G 3 32 A12125 120 1/3 GEB EL6 COLUMBIA: ST824-332G-FAA12.125-3EBB120-GLR-EL	120	(3) F32 T8 835K
G2	2X4 RECESSED ACRYLIC LENS TROFFER GRID MOUNT, 2-LAMP, ELECTRONIC BALLAST	LITHONIA: 2SP8 G 2 32 A12125 120 1/3 GEB COLUMBIA: ST824-232G-FAA12.125-EBB120-GLR	120	(2) F32 T8 835K
G2E	SAME AS G2 WITH BATTERY PACK	LITHONIA: 2SP8 G 2 32 A12125 120 1/3 GEB EL6 COLUMBIA: ST824-232G-FAA12.125-EBB120-GLR-EL	120	(2) F32 T8 835K
G3	2X4 RECESSED ACRYLIC LENS TROFFER GRID MOUNT, 2-LAMP, ELECTRONIC BALLAST	LITHONIA: 2AV G 3 32 MDF 120 1/3 GEB COLUMBIA: STR24-332G-MPO-EBB120-GLR	120	(2) F32 T8 835K
W1	WALL MOUNTED 8' LINEAR FLUORESCENT 2-LAMP, ELECTRONIC BALLAST CONTINUOUS MOUNT AS SHOWN PER DRAWINGS	KENALL: MLHA8 48 F LG PP 232 EB 1 120	120	(2) F32 T8 835K
W1E	SAME AS W1 WITH BATTERY PACK CONTINUOUS MOUNT AS SHOWN PER DRAWINGS	KENALL: MLHA8 48 F LG PP 232 EB 1 120 PEL	120	(2) F32 T8 835K
WW	4' RECESSED WALL WASH FIXTURE GRID MOUNT, 1-LAMP, DIMMING BALLAST	PEERLESS LIGHTING: LWAR9 G1 54T5HO HOL U4 120 OSDIM L/LP	120	(1) F54 T5HO 835K
X1	DIECAST LED EXIT LIGHT, SINGLE FACE WHITE FACE, GREEN LETTERS	LITHONIA: LE S W1G 120 EL N	120	INCLUDED

EQUIPMENT SCHEDULE

UNIT #	FUNCTION	LOAD	VOLT	PHASE	FULL LOAD AMPS	CONDUIT	SIZE	NO. SETS	WIRES NO.	WIRES SIZE	OCPD TYPE	OCPD AMPS	REF. NOTES STARTER	REF. NOTES DISCONNECT	REF. NOTES OTHER	REMARKS
CU-1	CONDENSING UNIT	13.6 FLA	208	1	13.6	3/4"		1	2	12	CB	25		1A		
EF-1	EXHAUST FAN	500 W	120	1	4.90	3/4"		1	2	12	CB	20			11A	FACTORY THERMAL OVER. AND DISCONNECT
HP-1	SPLIT SYSTEM A/C	1 FLA	208	1	1	3/4"		1	2	12	CB	15		4A		
RTU-1	ROOF TOP UNIT	20 FLA	208	3	20	3/4"		1	3	10	CB	40			11A	FACTORY FUSED DISCONNECT
RTU-2	ROOF TOP UNIT	23.2 FLA	208	3	23.2	3/4"		1	3	10	CB	45			11A	FACTORY FUSED DISCONNECT
RTU-3	ROOF TOP UNIT	55.2 FLA	208	3	55.2	1"		1	3	4	CB	90			11A	FACTORY FUSED DISCONNECT (BID AS ALTERNATE)
WH-1	WATER HEATER	4 KW	208	3	13.06	3/4"		1	3	10	CB	20		1A		

NOTES:
1. NON-FUSED DISCONNECT SWITCH
2. FUSED DISCONNECT SWITCH
3. BREAKER IN ENCLOSURE
4. MANUAL STARTER W/THERMAL OVERLOAD
5. MAGNETIC STARTER
6. MAGNETIC STARTER/NON-FUSED DISCONNECT COMBINATION
7. MAGNETIC STARTER/FUSED DISCONNECT COMBINATION
8. MAGNETIC STARTER/BREAKER COMBINATION
9. VARIABLE FREQUENCY DRIVE
10. REDUCED VOLTAGE STARTER
11. DIRECT CONNECTION
12. RECEPTACLE/SPECIAL PURPOSE OUTLET/ETC.
13. TWO-SPEED STARTER, COORDINATE W/MOTOR TYPE

A. FURNISHED, INSTALLED, AND CONNECTED UNDER DIVISION 16
B. FURNISHED AND INSTALLED UNDER ANOTHER DIVISION REQUIRING CONNECTION UNDER DIVISION 16.
C. FURNISHED UNDER ANOTHER DIVISION BUT INSTALLED AND CONNECTED UNDER DIVISION 16.
D. FURNISHED, INSTALLED AND CONNECTED UNDER ANOTHER DIVISION.

OVER CURRENT PROTECTIVE DEVICES

CB = CIRCUIT BREAKER - THERMAL MAGNETIC
FN = FUSE - NON INDUCTIVE LOAD
FI = FUSE - INDUCTIVE LOAD
MO = MAGNETIC ONLY CIRCUIT BREAKER

GENERAL NOTES

1. CONSULT ARCHITECTURAL REFLECTED CEILING PLANS FOR EXACT LOCATION OF ALL LIGHTING FIXTURES.
2. VERIFY ALL EQUIPMENT DIMENSIONS AND LOCATIONS BEFORE BEGINNING ROUGH IN. CONSULT ALL APPLICABLE CONTRACT DRAWINGS AND SHOP DRAWINGS TO INSURE NEC CODE CLEARANCES REQUIRED AROUND ALL ELECTRICAL EQUIPMENT.
3. CONTRACTOR SHALL VERIFY ALL ELECTRICAL LOADS (VOLTAGE, PHASE, CONNECTION REQUIREMENTS, ETC.) OF EQUIPMENT FURNISHED UNDER DIVISION 15 WITH APPROVED MECHANICAL SHOP DRAWINGS BEFORE BEGINNING ROUGH IN.
4. SEE SECTION 16510 OF THE SPECIFICATION REQUIRED COORDINATION MEETINGS WITH MECHANICAL AND CEILING CONTRACTORS.
5. SEE APPLICABLE SHOP DRAWINGS FOR ROUGH IN LOCATION OF ALL EQUIPMENT, WIRING DEVICES, ETC. WHERE APPLICABLE MOUNT ALL WIRING DEVICES ABOVE BACK SPLASH EXCEPT THOSE SERVING UNDER COUNTER EQUIPMENT.
6. SEE SPECIFICATION FOR ENERGY SAVING LAMP AND BALLAST REQUIREMENTS.
7. FINISHES OF ALL LIGHT FIXTURES SHALL BE AS SELECTED BY ARCHITECT.
8. THE ELECTRICAL CONTRACTOR SHALL NOTIFY AND COOPERATE WITH THE MECHANICAL CONTRACTOR SUCH THAT NO PIPING, DUCTS, OR EQUIPMENT FOREIGN TO THE OPERATION OF THE ELECTRICAL EQUIPMENT SHALL BE PERMITTED TO BE INSTALLED IN, ENTER OR PASS THRU ELECTRICAL ROOMS OR SPACES, OR ABOVE OR BELOW ELECTRICAL EQUIPMENT IN OTHER AREAS.
9. ELECTRICAL BOXES SHALL NOT BE LOCATED IN MASONRY COLUMNS IN BRICK WALLS OR IN GROUTED CELLS ADJACENT TO OPENINGS. COORDINATE LOCATION OF BOXES WITH MASONRY CONTRACTOR.
10. ALL PENETRATIONS OF FIRE RATED FLOORS, WALLS, AND CEILINGS SHALL BE SEALED WITH APPROVED MATERIAL TO MAINTAIN FIRE RATING OF SURFACE PENETRATED.
11. CIRCUITS EXTENDING OVER 70' FOR 120 VOLT, 20 AMP CIRCUITS SHALL BE RUN WITH MINIMUM #10 CONDUCTORS.

ELECTRICAL SYMBOL SCHEDULE

1. SEE FIXTURE SCHEDULE FOR TYPE, MOUNTING AND WATTAGE.
2. HEIGHT MEASURED TO CENTER LINE OF THE BOX FROM THE FINISH FLOOR.
3. REFER TO DRAWINGS FOR DIRECTIONAL ARROWS.
4. SUBSCRIPT KEYS SWITCH TO FIXTURES CONTROLLED.
5. NEMA TYPE 'ND' NON-FUSED UNLESS NOTED 'F' (FUSED). USE 'HD' 480 V.
6. HEIGHT TO BE THE LOWER OF EITHER 80" A.F.F. OR 6" BELOW CEILING.
7. PROVIDE H.O.A. AND S.S. PUSHBUTTONS AS REQUIRED.
8. DOUBLE ARROWS DENOTE A DOUBLE FACE UNIT.
9. COORDINATE WITH MILLWORK SHOP DRAWINGS AND ELEVATIONS FOR HEIGHT.
10. SUBSCRIPT DENOTES NEMA CONFIGURATION.
11. HEIGHT MEASURED TO BOTTOM OF THE BOX FROM FINISH FLOOR.

* TYPICAL SYMBOL SCHEDULE. SOME SYMBOLS MAY NOT BE USED IN THIS SET OF DRAWINGS.

STANDARD MOUNTING HEIGHT UNLESS OTHERWISE NOTED ON PLANS

SYMBOL	DESCRIPTION	MOUNTING HEIGHT	NOTES
	ONE CIRCUIT, TWO WIRE HOME RUN TO PANEL		
	2 CIRCUIT, 3 WIRE, COMMON NEUTRAL HOME RUN		
	3 CIRCUIT, 4 WIRE, COMMON NEUTRAL HOME RUN		
	CONDUIT RUN CONCEALED IN WALL OR CEILING		
	CONDUIT RUN CONCEALED IN FLOOR OR GROUND		
	CONDUIT UP		
	CONDUIT DOWN		
	CONDUIT STUB LOCATION	CAP CONDUIT	
	CABLE TRAY	AS NOTED	
	CEILING LIGHT FIXTURE	CEILING	1.
	WALL LIGHT FIXTURE	AS NOTED	1.
	RECESSED DOWNLIGHT FIXTURE	CEILING	1.
	FLUORESCENT LIGHT FIXTURE	AS NOTED	1
	FLUORESCENT EGRESS LIGHT FIXTURE	AS NOTED	UNSWITCHED
	AREA LIGHT POLE AND FIXTURE	CONCRETE BASE	SEE DIAGRAM
	FLOOD OR TRACK FIXTURE	AS NOTED	
	CEILING MOUNTED EXIT LIGHT	CEILING	1.3.8.
	WALL MOUNTED EXIT LIGHT	AS NOTED	1.3.8.
$	SINGLE POLE SWITCH	+4'-0"	2.
$a	SINGLE POLE SWITCH	+4'-0"	4. 2.
$3	THREE-WAY SWITCH	+4'-0"	2.
$4	FOUR-WAY SWITCH	+4'-0"	2.
$K	KEY OPERATED SWITCH	+4'-0"	2.
$P	SWITCH WITH PILOT LIGHT	+4'-0"	2.
$D	VARIABLE INTENSITY SWITCH	+4'-0"	2.
$TM	TIMER SWITCH	+4'-0"	2.
$S	MOMENTARY CONTACT SWITCH, CENTER POSITION OFF	+4'-0"	2.
	OCCUPANCY SENSOR	CEILING	
	OCCUPANCY SENSOR	+4'-0"	2.
PP	POWER PACK	CEILING	SEE DIAGRAM, SPEC.
A	AUTOMATIC RELAY PACK	CEILING	SEE DIAGRAM. SPEC.
T	LOW VOLTAGE TRANSFORMER		
	DUPLEX RECEPTACLE UPPER OUTLET SWITCH CONTROLLED	+16" OR AS NOTED	9. 11.
	SIMPLEX RECEPTACLE	+16" OR AS NOTED	9. 11.
	DUPLEX RECEPTACLE	+16" OR AS NOTED	9. 11.
A	DUPLEX RECEPTACLE		9.
W	ELECTRIC WATER COOLER RECEPTACLE		SEE DIAGRAM
WP	WEATHERPROOF RECEPTACLE	+24" OR AS NOTED	2. 9.
IG	ISOLATED GROUND RECEPTACLE	+16" OR AS NOTED	9. 11.
	GROUND FAULT INTERRUPTER DUPLEX RECEPTACLE	+16" OR AS NOTED	9. 11.
	DUPLEX RECEPTACLE EMERGENCY POWER (RED)	+16" OR AS NOTED	9. 11.
	FOURPLEX RECEPTACLE	+16" OR AS NOTED	9. 11.
	FOURPLEX RECEPTACLE EMERGENCY POWER (RED)	+16" OR AS NOTED	9. 11.
	FLOOR OUTLET WITH 20A DEVICE	FLOOR	
	MULTIPLE SERVICE FLOOR BOX	FLOOR	
	SPECIAL PURPOSE OUTLET	+16" OR AS NOTED	10. WITH CAP. 11.
	CORD DROP		SEE DIAGRAM
	PLUGMOLD	+46" OR AS NOTED	
	TELEVISION OUTLET	+16" OR AS NOTED	11.
	DATA OUTLET	+16" OR AS NOTED	9. 11.
	TELEPHONE OUTLET	+16" OR AS NOTED	9. 11.
	TELEPHONE/DATA OUTLET	+16" OR AS NOTED	9. 11.
	TELEPHONE OUTLET	FLOOR	
	CALL SWITCH	+4'-0"	2.
C	CLOCK OUTLET	+7'-6"	8.
	CLOCK/SPEAKER COMBINATION	+7'-6"	

STANDARD MOUNTING HEIGHT UNLESS OTHERWISE NOTED ON PLANS

SYMBOL	DESCRIPTION	MOUNTING HEIGHT	NOTES
J	JUNCTION BOX ('F' IN FLOOR)	AS NOTED	
	MOTOR OUTLET	TO SUIT EQUIP.	
P	PHOTO-ELECTRIC CONTROL	AS NOTED	TORK 2000A
TC	TIME CLOCK	+5'-0"	2.
	PUSHBUTTON	+4'-0"	2.
J	NON-FUSED DISCONNECT SWITCH	+5'-0"	5.
F J	FUSED DISCONNECT SWITCH	+5'-0"	5.
$T	MANUAL STARTER THERMAL OVERLOAD SWITCH WITH PILOT LIGHT	+4'-0"	2.
	MAGNETIC STARTER	+5'-0"	7.
J	MAGNETIC STARTER / DISCONNECT COMBINATION	+5'-0"	
VFD	VARIABLE FREQUENCY DRIVE	+6'-6"	
	PANEL BOARD	TOP AT +6'-0"	
	MAIN DISTRIBUTION PANEL		
	TELEPHONE TERMINAL BOARD		
	BELL	+7'-6"	
	CHIME	+7'-6"	
F	FIRE ALARM MANUAL STATION	+4'-0"	2.
H	FIRE ALARM SIGNAL HORN/STROBE PROJECTORS	+6'-8"	6.
H	FIRE ALARM SIGNAL HORN/STROBE	+6'-8"	6.
E	FIRE ALARM SIGNAL SPEAKER/STROBE	+6'-8"	6.
S	SMOKE DETECTOR	CEILING	
D	DUCT SMOKE DETECTOR		MTD. IN DUCT
H	HEAT DETECTOR	CEILING	
D	FIRE/SMOKE DAMPER		
	DOOR HOLDER	AS NOTED	
FS	FLOW SWITCH		
TS	TAMPER SWITCH		
WF	WATER FLOOD INDICATOR		
	O.S. & Y. VALVE		SEE DIAGRAM
R	FIRE ALARM RELAY		
CM	FIRE ALARM CONTROL MODULE		
MM	FIRE ALARM MONITOR MODULE		
S	FIRE ALARM STROBE	+6'-8"	6.
D	DURESS PUSHBUTTON	+4'-0"	
D	SECURITY SYSTEM DOOR SWITCH (JUNCTION BOX ONLY)	DOOR JAMB	
ML	MAGNETIC SHEAR LOCK		
A	SECURITY SYSTEM KEYED ACCESS SWITCH	+4'-0"	2.
I	INFRARED SENSOR	AS NOTED	
M	SECURITY MOTION DETECTOR (JUNCTION BOX ONLY)		MOUNT AS PER. MAN
G	GLASS BREAK DETECTOR	CEILING	
ES	ELECTRIC DOOR STRIKE		
CR	ACCESS CONTROL CARD READER	+4'-0"	2.
	CLOSED CIRCUIT TELEVISION CAMERA	AS NOTED	
	DOOR POSITION INDICATING SWITCH		
#	SOUND SYSTEM SPEAKER	+8'-0" OR AS NOTED	
IC	INTERCOM SPEAKER	AS NOTED	
V	VOLUME CONTROL	+4'-0"	2.
M	MICROPHONE OUTLET	+16"	11.
M	MICROPHONE FLOOR OUTLET	FLOOR	
M	MICROPHONE CEILING OUTLET	CEILING	
	SOUND EQUIPMENT CABINET		CIRCUIT TO 120V
842	ARCHITECTURAL ROOM NUMBER		
A	LIGHT FIXTURE (LETTER DESIGNATES TYPE)		
EQ 34	EQUIPMENT NUMBER		
	POWER POLE		

INDEX OF ELECTRICAL DRAWINGS

E001 SYMBOLS, SCHEDULES, AND NOTES
E101 ELECTRICAL DEMOLITION PLAN
E201 LIGHTING PLAN
E301 POWER PLAN
E401 PANELBOARD SCHEDULES AND ONE-LINE DIAGRAM
E501 ELECTRICAL DIAGRAMS
E502 ELECTRICAL DIAGRAMS
E503 ELECTRICAL DIAGRAMS

BNA CONSULTING
635 South State Street
Salt Lake City, UT 84111
P 801.322.2111
F 801.322.2196
www.bnaconsulting.com
SALT LAKE ST.GEORGE

© 2007 BNA CONSULTING

Axis Architects
352 S. DENVER ST. SUITE 205 - SALT LAKE CITY - UTAH 84111 - P. 355-3003 - F. 355-0113

DFCM

DRIVERS LICENSE OFFICE State Fairpark
Conference Center - 155 N.1000 West, SLC. Utah 84116

Revision #	Date
.	
.	
.	
.	
.	
.	

Axis Job # 0518
BNA Job # 07242A
Owner # DFCM # 07009370
Date 06-19-07
Drawn BNA
Checked E.F.

SYMBOLS, SCHEDULES AND NOTES

E001

By: paul; Jul 11, 2007 - 3:46pm
F:\2007\242A\DRAW\242A-E001.dwg

GENERAL SHEET NOTES

1. REMOVE EQUIPMENT SHOWN, UNLESS OTHERWISE NOTED. REMOVE ALL WIRE AND ABANDONED CONDUIT BACK TO ELECTRICAL PANEL. TURN OFF UNUSED BREAKERS AND UPDATE DOOR PANEL SCHEDULES.
2. COORDINATE ALL DEMOLITION WITH THE DEPARTMENT OF TELECOMMUNICATION SERVICES. (LOREN CASTERLINE P538-3319. LCASTERLINE@UTAH.GOV)

SHEET KEYNOTES

1. REMOVE ALL GRID MOUNTED LIGHT FIXTURES IN ROOM. REMOVE WIRE AND ABANDONED CONDUIT BACK TO ELECTRICAL PANEL. REMOVE ALL SMOKE DETECTORS INCLUDING ALL WIRE AND CONDUIT BACK TO FIRE PANEL.
2. SWITCH CONTROLS LIGHTING IN BOTH LARGE OPEN AREAS. REMOVE SWITCH WIRING TO UNSHADED AREA. NEW LIGHTING CONTROL FOR UNSHADED REGION WILL BE ADDED.
3. RELOCATE JUNCTION BOX AND CONDUIT TO ALLOW FOR NEW ENTRANCE TO STORAGE ROOM.
4. RELOCATE (4) FIXTURES (SEE SHEET E201).
5. RELOCATE AT 42". COORDINATE WITH NEW LOCATION OF BATHROOM PLUMBING FIXTURES. (SEE SHEET E301).

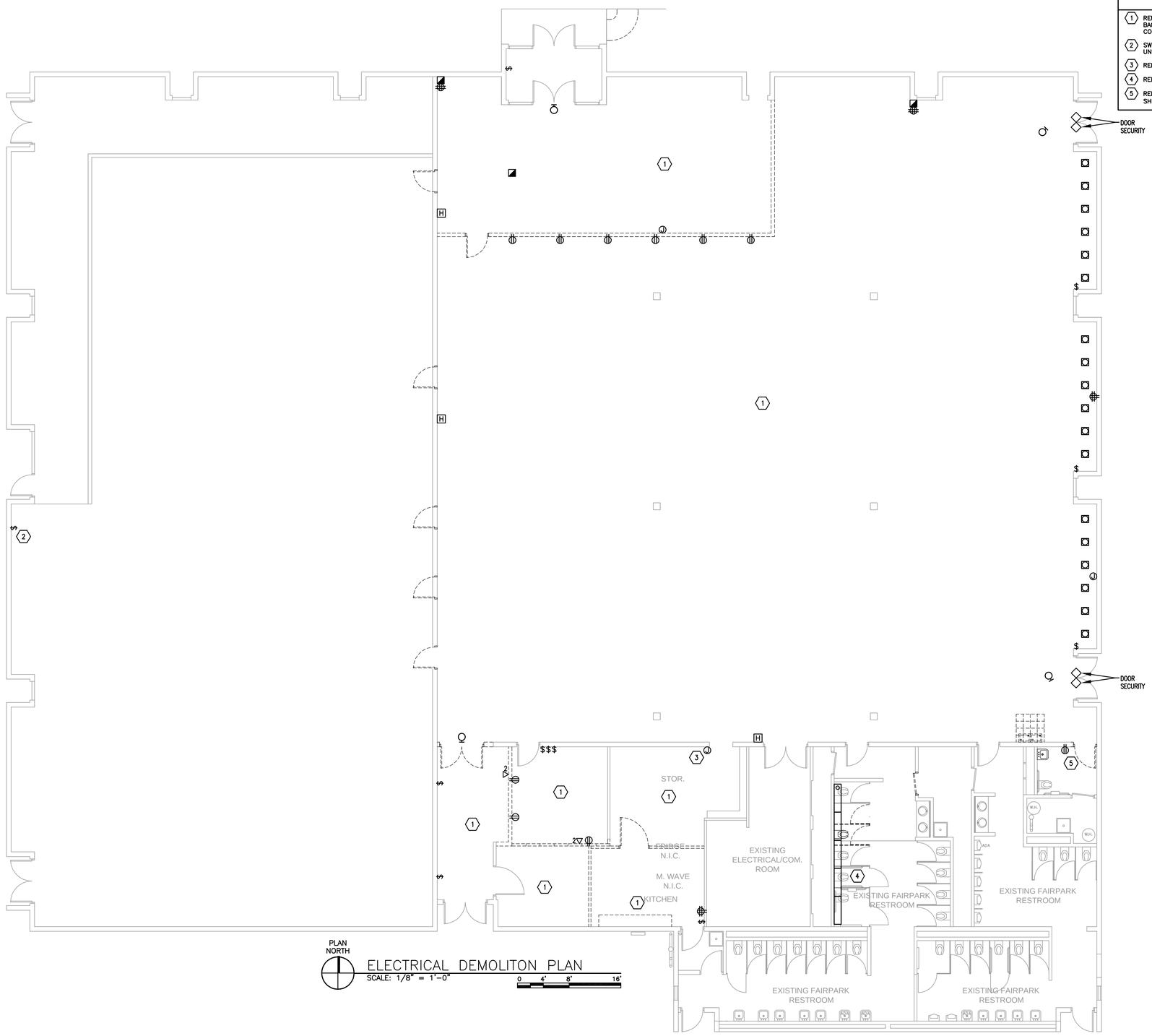

ELECTRICAL DEMOLITON PLAN
SCALE: 1/8" = 1'-0"
0 4' 8' 16'

BNA CONSULTING
SALT LAKE ST.GEORGE
635 South State Street
Salt Lake City, UT 84111
P 801.322.2196
F 801.322.2305
www.bnaconsulting.com

© 2007 BNA CONSULTING

Axis Architects
352 S. DENVER ST. SUITE 205 – SALT LAKE CITY – UTAH 84111 – P. 355-3003 – F. 355-0113

DRIVERS LICENSE OFFICE State Fairpark

Conference Center - 155 N.1000 West, SLC. Utah 84116

Revision #	Date
.	
.	
.	
.	
.	

Axis Job #	0518
BNA Job #	07242A
Owner #	DFCM # 07009370
Date	06-19-07
Drawn	BNA
Checked	E.F.

ELECTRICAL DEMOLITION PLAN

E101

By: paul; Jul 11, 2007 – 3:47pm
F:\2007\242A\DRAW\242A-E101.dwg

GENERAL SHEET NOTES

1. ALL CIRCUIT BREAKERS FOR LIGHTING ARE EXISTING AND WILL BE REUSED.
2. ALL LIGHT FIXTURES SHOWN IN LIGHT LINE TYPE ARE EXISTING AND SHOWN ONLY FOR REFERENCE.

SHEET KEYNOTES

1. CONNECT EXIT SIGN TO UNSWITCHED LEG OF CIRCUIT FROM LINE SIDE OF RELAY.
2. PROVIDE ADDITIONAL POWER PACK AND RECONFIGURE WIRING TO ALLOW FOR SEPARATE CONTROL IN NEWLY DIVIDED RESTROOM. OCCUPANCY SENSORS AND 1 POWER PACK ARE EXISTING.
3. EXISTING FIXTURES TO BE RELOCATED AS SHOWN. SEE E101.
4. BATTERY PACK TO BE CONNECTED TO UNSWITCHED CIRCUIT.
5. (2) #10 CU WITH GND TO PANEL 'E' IN 3/4" CONDUIT. CIRCUIT BREAKER IN PANEL TO BE REUSED.
6. VERIFY COVERAGE OF OCCUPANCY SENSOR FOR NEW ENTRYWAY. ADD ADDITIONAL SENSOR IF NEEDED.
7. ADD SWITCH FOR LOCAL CONTROL OF EXISTING ELECTRICAL ROOM.
8. LOCATE FIXTURES 2' FROM WALL.
9. NOT USED.
10. CONNECT BATTERY PACKS TO UNSWITCHED LEG OF CIRCUIT.

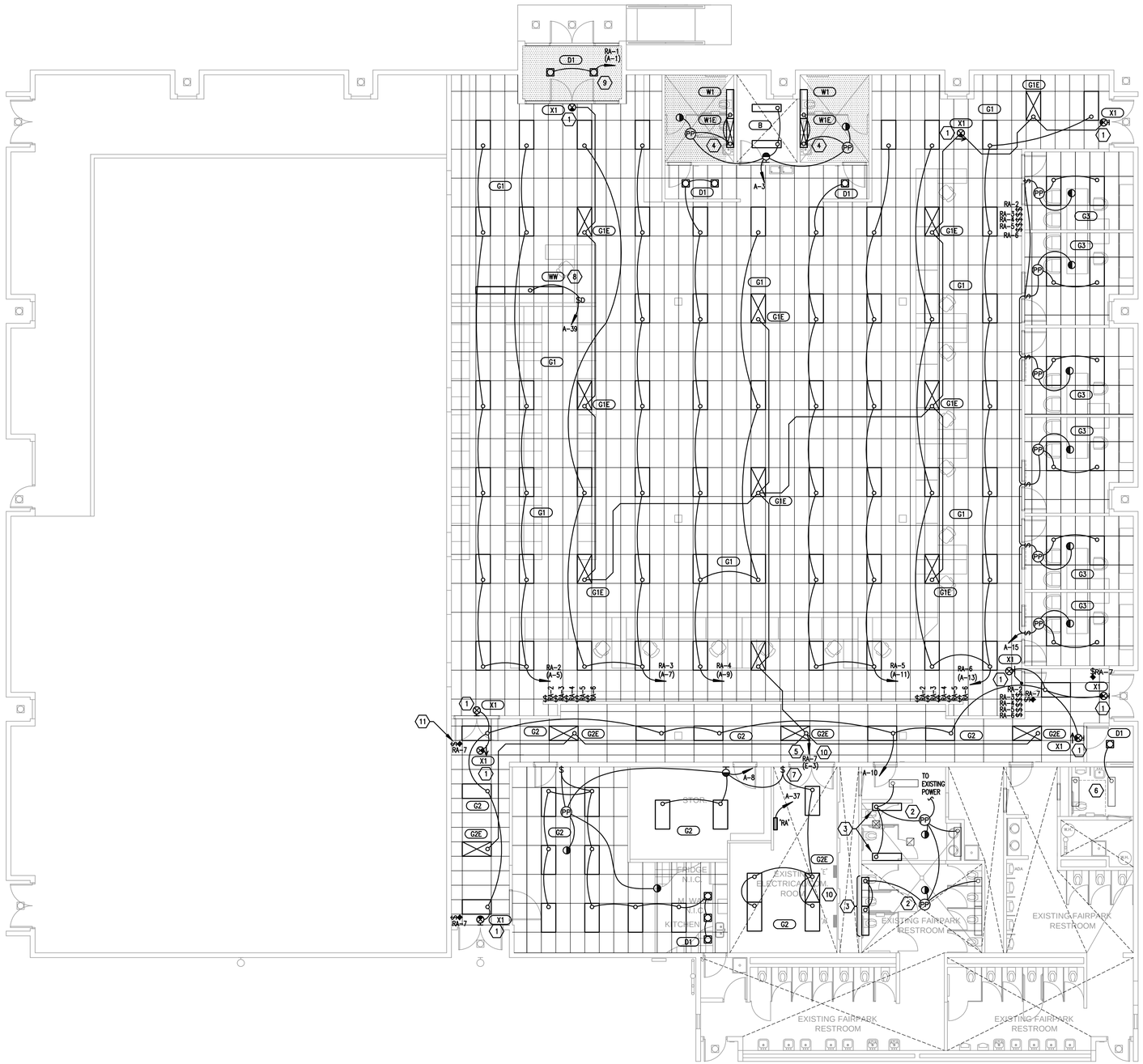

PLAN NORTH

LIGHTING PLAN
SCALE: 1/8" = 1'-0"

0 4' 8' 16'

By: paul; Jul 11, 2007 – 3:47pm
F:\2007\242A\DRAW\242A-E201.dwg

BNA CONSULTING
SALT LAKE ST.GEORGE
635 South State Street
Salt Lake City, UT 84111
P 801.322.2196
F 801.322.2305
www.bnaconsulting.com

© 2007 BNA CONSULTING

Axis Architects
352 S. DENVER ST. SUITE 205 – SALT LAKE CITY – UTAH 84111 – P 355-3003 – F 355-0113

DRIVERS LICENSE OFFICE State Fairpark

Conference Center - 155 N.1000 West, SLC, Utah 84116

Revision #	Date
.	
.	
.	
.	
.	

Axis Job #	0518
BNA Job #	07242A
Owner #	DFCM # 07009370
Date	06-19-07
Drawn	BNA
Checked	E.F.

LIGHTING PLAN

E201

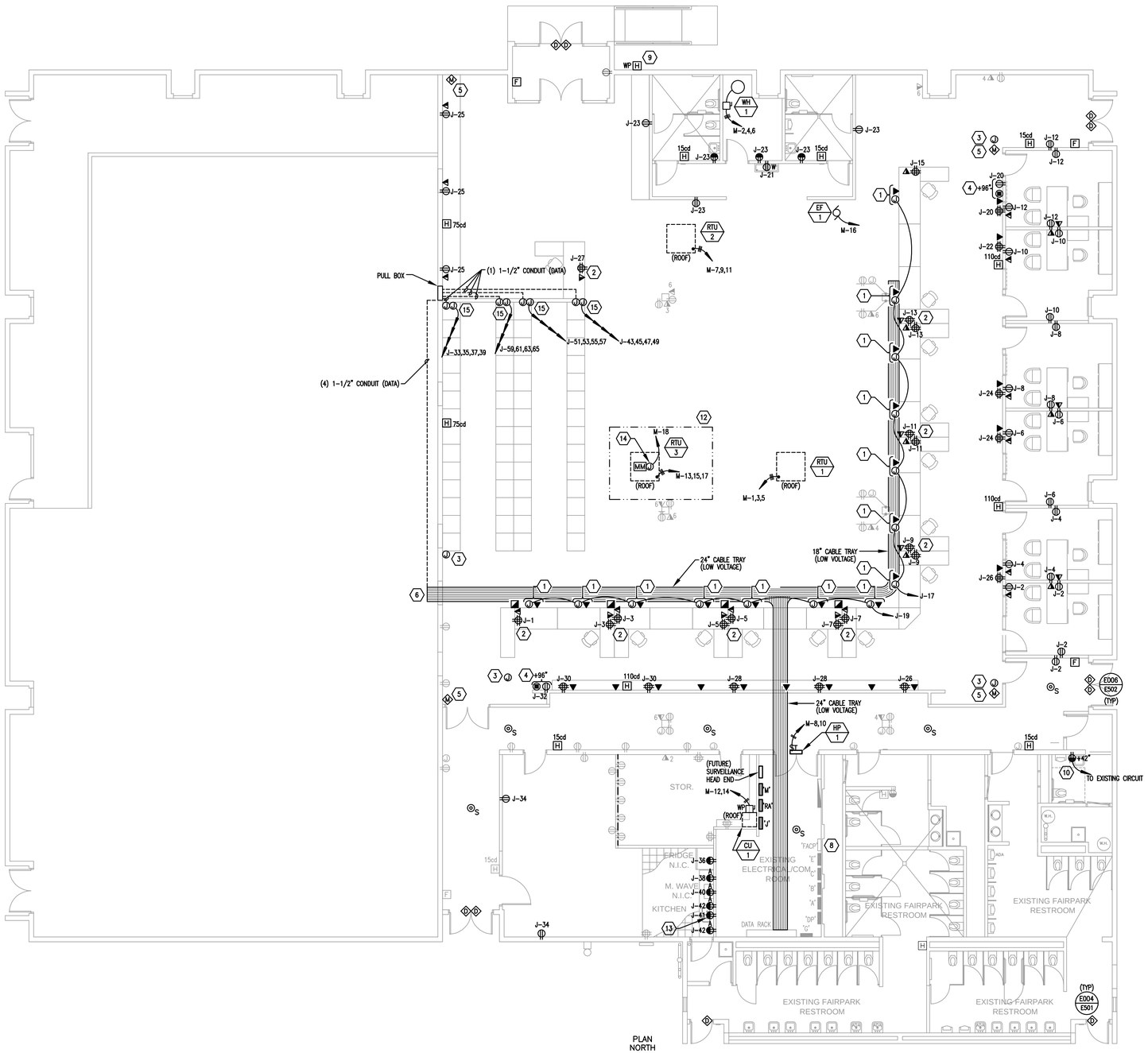

POWER PLAN
SCALE: 1/8" = 1'-0"

0 4' 8' 16'

GENERAL SHEET NOTES

1. ALL EQUIPMENT SHOWN IN LIGHT TYPE FACE IS EXISTING AND SHOWN FOR REFERENCE ONLY.
2. ALL POWER AND DATA FOR OFFICE FURNITURE ON EAST SIDE OF OPEN PUBLIC AREA TO BE ROUTED DOWN EXISTING COLUMNS AND THROUGH FURNITURE RACEWAY.
3. ALL SECURITY/CAMERA INSTALLATION TO INCLUDE RACEWAY ONLY.
4. ALL VOICE/DATA INSTALLATION TO INCLUDE RACEWAY ONLY. PROVIDE 1" EMT CONDUIT FROM EACH OUTLET TO CABLETRAY.

SHEET KEYNOTES

1. PROVIDE POWER AND DATA CONNECTION TO NUMBER DISPLAY DEVICE IN CEILING.
2. POWER/DATA DEVICES INSTALLED IN OFFICE FURNITURE.
3. FUTURE CCTV CAMERA LOCATION. PROVIDE 3/4" CONDUIT BACK TO SURVEILLANCE HEAD END IN EXISTING ELECTRICAL/COM ROOM. VERIFY EXACT CAMERA LOCATION WITH OWNER/ARCHITECT PRIOR TO ROUGH-IN.
4. FUTURE TV MONITOR LOCATION. VERIFY EXACT LOCATION WITH OWNER/ARCHITECT PRIOR TO ROUGH-IN. PROVIDE 3/4" CONDUIT BACK TO SURVEILLANCE HEAD END IN EXISTING ELECTRICAL/COM ROOM.
5. FUTURE MOTION SENSOR LOCATION. PROVIDE JUNCTION BOX WITH 3/4" CONDUIT ROUTED BACK TO SECURITY PANEL. VERIFY EXACT LOCATION WITH OWNER/ARCHITECT PRIOR TO ROUGH-IN.
6. STUB CABLE TRAY THROUGH WALL.
7. SURVEILLANCE HEAD END (BY OWNER).
8. ALL NEW FIRE DEVICES TO BE COMPATIBLE WITH EXISTING FIRE SYSTEM.
9. COORDINATE EXACT LOCATION OF EXTERIOR HORN/STROBE WITH FIRE MARSHALL AND OWNER/ARCHITECT PRIOR TO INSTALLATION.
10. RECEPTACLE TO BE RELOCATED. SEE SHEET E101.
11. NOT USED.
12. BID WORK AS ALTERNATE.
13. DISPOSAL RECEPTACLE BELOW SINK. PROVIDE SWITCH ON WALL ABOVE BACKSPLASH.
14. MONITOR MODULE FOR DUCT SMOKE DETECTOR. PROVIDE 120V TO DUCT SMOKE DETECTOR AS SHOWN DUCT DETECTOR PROVIDED WITH MECHANICAL EQUIPMENT.
15. PROVIDE POWER WHIP INTO OFFICE FURNITURE.

BNA CONSULTING
SALT LAKE ST.GEORGE
635 South State Street
Salt Lake City, UT 84111
P.801.322.2196
F.801.322.2305
www.bnaconsulting.com

© 2007 BNA CONSULTING

Axis Architects
352 S. DENVER ST. SUITE 205 – SALT LAKE CITY – UTAH 84111 – P. 355-3003 – F. 355-0113

DRIVERS LICENSE OFFICE State Fairpark

Conference Center - 155 N.1000 West, SLC. Utah 84116

Revision #	Date
.	
.	
.	
.	
.	

Axis Job #	0518
BNA Job #	07242A
Owner #	DFCM # 07009370
Date	06-19-07
Drawn	BNA
Checked	E.F.

POWER PLAN

E301

By: paul; Jul 11, 2007 – 3:47pm
F:\2007\242A\DRAW\242A-E301.dwg

PANELBOARD SCHEDULE

PANEL A (EXISTING PANEL) — TYPE NQOD — 120/208 VOLTS — 3 PH — 4 W

MOUNTING: ___ FLUSH, X SURFACE — DIMENSIONS: 20 W, 5.75 D (in.), ___ H — LOCATION EXISTING ELEC/COMM ROOM — AMP 125 — MAINS: X LUGS, ___ BREAKER, ___ SUBFEED LUGS, ___ ISO GROUND, ___ 200% NEUTRAL

BRANCH BREAKERS

ITEM	AMPS	POLE	WIRE SIZE	CIR. NO.	LEFT PHASE LOAD A	B	C	RIGHT PHASE LOAD A	B	C	CIR. NO.	AMPS	POLE	WIRE SIZE	ITEM
PUBLIC AREA LIGHTING	20	1	12	1	100			XX			2	20	1		EXISTING EQUIPMENT
PUBLIC AREA LIGHTING	20	1	10	3		384			XX		4	20	1		EXISTING EQUIPMENT
PUBLIC AREA LIGHTING	20	1	10	5			1344			XX	6	20	1		EXISTING EQUIPMENT
PUBLIC AREA LIGHTING	20	1	10	7	1344			640			8	20	1	10	BREAK RM/STORAGE LTG
PUBLIC AREA LIGHTING	20	1	10	9		960			768		10	20	1	10	HALLWAY LIGHTING
PUBLIC AREA LIGHTING	20	1	10	11			1344			XX	12	20	1		EXISTING EQUIPMENT
PUBLIC AREA LIGHTING	20	1	10	13	1152			XX			14	20	1		EXISTING EQUIPMENT
EAST OFFICE LIGHTING	20	1	10	15		1152			XX		16	20	1		EXISTING EQUIPMENT
EXISTING EQUIPMENT	20	1		17			XX			XX	18	20	1		EXISTING EQUIPMENT
EXISTING EQUIPMENT	20	1		19	XX			XX			20	20	1		EXISTING EQUIPMENT
EXISTING EQUIPMENT	20	1		21		XX			XX		22	20	1		EXISTING EQUIPMENT
EXISTING EQUIPMENT	20	1		23			XX			XX	24	20	1		EXISTING EQUIPMENT
EXISTING EQUIPMENT	20	1		25	XX			XX			26	20	1		EXISTING EQUIPMENT
EXISTING EQUIPMENT	30	1		27		XX			XX		28	20	1		EXISTING EQUIPMENT
EXISTING EQUIPMENT	30	1		29			XX				30				SPACE ONLY
EXISTING EQUIPMENT	20	1		31	XX						32				SPACE ONLY
EXISTING EQUIPMENT	20	1		33		XX					34				SPACE ONLY
EXISTING EQUIPMENT	20	1		35			XX				36				SPACE ONLY
RELAY PANEL 'RA' CTRL	20	1	12	37	500						38				SPACE ONLY
ACCENT LTG	20	1	12	39		200			XX		40	50	2		EXISTING EQUIPMENT
SPACE ONLY				41						XX	42	–	–	–	–
					3096	2696	2688	640	768	0					
					3736	3464	2688	TOTAL							CONNECTED LOAD TOTAL 9888 VA
					31.13	28.87	22.40	AMPS/PHASE							

EQUIP RATING 10,000 AMPS RMS SYM.

PANELBOARD SCHEDULE

PANEL J (SECTION 1) — TYPE NQOD — 120/208 VOLTS — 3 PH — 4 W

MOUNTING: ___ FLUSH, X SURFACE — DIMENSIONS: 20 W, 5.75 D (in.), ___ H — LOCATION EXISTING ELEC/COMM ROOM — AMP 225 — MAINS: X LUGS, ___ BREAKER, X SUBFEED LUGS, ___ ISO GROUND, ___ 200% NEUTRAL

BRANCH BREAKERS

ITEM	AMPS	POLE	WIRE SIZE	CIR. NO.	LEFT PHASE LOAD A	B	C	RIGHT PHASE LOAD A	B	C	CIR. NO.	AMPS	POLE	WIRE SIZE	ITEM
WORK STATION RECEPT	20	1	12	1	360			720			2	20	1	12	OFFICE RECEPTACLES
WORK STATION RECEPT	20	1	12	3		720			540		4	20	1	12	OFFICE RECEPTACLES
WORK STATION RECEPT	20	1	12	5			720			540	6	20	1	12	OFFICE RECEPTACLES
WORK STATION RECEPT	20	1	12	7	720			540			8	20	1	12	OFFICE RECEPTACLES
WORK STATION RECEPT	20	1	12	9		720			540		10	20	1	12	OFFICE RECEPTACLES
WORK STATION RECEPT	20	1	12	11			720			720	12	20	1	12	OFFICE RECEPTACLES
WORK STATION RECEPT	20	1	12	13	720						14	20	1		SPARE
WORK STATION RECEPT	20	1	12	15		360					16	20	1		SPARE
NUMBER SYSTEM – EAST	20	1	12	17			700				18	20	1		SPARE
NUMBER SYSTEM – SO.	20	1	12	19	700			540			20	20	1	12	WALL RECEPT – EAST
WATER COOLER	20	1	12	21		1000			360		22	20	1	12	WALL RECEPT – EAST
RESTROOM RECEPTS	20	1	12	23			1080			720	24	20	1	12	WALL RECEPT – EAST
WALL RECEPT – WEST	20	1	12	25	540			720			26	20	1	12	WALL RECEPT – EAST
INFO DESK RECEPT	20	1	12	27		360			720		28	20	1	12	WALL RECEPT – SOUTH
SPARE	20	1		29						720	30	20	1	12	WALL RECEPT – SOUTH
SPARE	20	1		31				180			32	20	1	12	WALL RECEPT – SOUTH
TEST STATION RECEPTS	20	1	12	33		720			180		34	20	1	12	WALL RECEPT – SOUTH
TEST STATION RECEPTS	20	1	12	35			720			1200	36	20	1	12	REFRIGERATOR
TEST STATION RECEPTS	20	1	12	37	720			1200			38	20	1	12	SMALL APPLIANCE
TEST STATION RECEPTS	20	1	12	39		360			1200		40	20	1	12	MICROWAVE
DISPOSAL	20	1	12	41			1000			1200	42	20	1	12	SMALL APPLIANCE
					3760	4240	4940	3900	3540	5100					
					7660	7780	10040	SEC 1 SUBTOTAL							CONNECTED LOAD SUBTOTAL 25480 VA
					63.83	64.83	83.67	SEC 1 AMPS/PHASE							
					10540	10660	12920	TOTAL							
					87.83	88.83	107.67	AMPS/PHASE							

TOTAL CONNECTED LOAD FOR SECTIONS 1 & 2 OF PANEL J 34120 VA

EQUIP RATING 10,000 AMPS RMS SYM.

PANELBOARD SCHEDULE

PANEL M — TYPE NQOD — 120/208 VOLTS — 3 PH — 4 W

MOUNTING: ___ FLUSH, X SURFACE — DIMENSIONS: 20 W, 5.75 D (in.), ___ H — LOCATION EXISTING ELEC/COMM ROOM — AMP 225 — MAINS: X LUGS, ___ BREAKER, ___ SUBFEED LUGS, ___ ISO GROUND, ___ 200% NEUTRAL

BRANCH BREAKERS

ITEM	AMPS	POLE	WIRE SIZE	CIR. NO.	LEFT PHASE LOAD A	B	C	RIGHT PHASE LOAD A	B	C	CIR. NO.	AMPS	POLE	WIRE SIZE	ITEM
RTU–1, ROOFTOP UNIT	40	3	10	1	2400			1567			2	20	3	10	WH–1, WATER HEATER
–	–	–	–	3		2400			1567		4	–	–	–	–
–	–	–	–	5			2400			1567	6	–	–	–	–
RTU–2, ROOFTOP UNIT	45	3	10	7	2784			120			8	15	2	12	HP–1, SPLIT SYSTEM A/C
–	–	–	–	9		2784			120		10	–	–	–	–
–	–	–	–	11			2784			1632	12	25	2	10	CU–1, CONDENSING UNIT
RTU–3, ROOFTOP UNIT	90	3	4	13	6624			1632			14	–	–	–	–
(BID AS ALTERNATE)	–	–	–	15		6624			500		16	20	1	12	EF–1, EXHAUST FAN
–	–	–	–	17			6624			100	18	20	1	12	DUCT DETECTOR
SPARE	20	3		19							20	20	1		SPARE
–	–	–	–	21							22	20	2		SPARE
–	–	–	–	23							24	–	–	–	SPARE
SPACE ONLY				25							26				SPACE ONLY
SPACE ONLY				27							28				SPACE ONLY
SPACE ONLY				29							30				SPACE ONLY
SPACE ONLY				31							32				SPACE ONLY
SPACE ONLY				33							34				SPACE ONLY
SPACE ONLY				35							36				SPACE ONLY
SPACE ONLY				37							38				SPACE ONLY
SPACE ONLY				39							40				SPACE ONLY
SPACE ONLY				41							42				SPACE ONLY
					11808	11808	11808	3319	2187	3299					
					15127	13995	15107	TOTAL							CONNECTED LOAD TOTAL 44229 VA
					126.06	116.63	125.89	AMPS/PHASE							

EQUIP RATING 10,000 AMPS RMS SYM.

PANELBOARD SCHEDULE

PANEL J (SECTION 2) — TYPE NQOD — 120/208 VOLTS — 3 PH — 4 W

MOUNTING: ___ FLUSH, X SURFACE — DIMENSIONS: 20 W, 5.75 D (in.), ___ H — LOCATION EXISTING ELEC/COMM ROOM — AMP 225 — MAINS: ___ LUGS, ___ BREAKER, ___ SUBFEED LUGS, ___ ISO GROUND, ___ 200% NEUTRAL

BRANCH BREAKERS

ITEM	AMPS	POLE	WIRE SIZE	CIR. NO.	LEFT PHASE LOAD A	B	C	RIGHT PHASE LOAD A	B	C	CIR. NO.	AMPS	POLE	WIRE SIZE	ITEM
TEST STATION RECEPTS	20	1	12	43	720						44	20	1	12	SPACE ONLY
TEST STATION RECEPTS	20	1	12	45		720					46				SPACE ONLY
TEST STATION RECEPTS	20	1	12	47			720				48				SPACE ONLY
TEST STATION RECEPTS	20	1	12	49	720						50				SPACE ONLY
TEST STATION RECEPTS	20	1	12	51		720					52				SPACE ONLY
TEST STATION RECEPTS	20	1	12	53			720				54				SPACE ONLY
TEST STATION RECEPTS	20	1	12	55	720						56				SPACE ONLY
TEST STATION RECEPTS	20	1	12	57		720					58				SPACE ONLY
TEST STATION RECEPTS	20	1	12	59			720				60				SPACE ONLY
TEST STATION RECEPTS	20	1	12	61	720						62				SPACE ONLY
TEST STATION RECEPTS	20	1	12	63		720					64				SPACE ONLY
TEST STATION RECEPTS	20	1	12	65			720				66				SPACE ONLY
SPACE ONLY				67							68				SPACE ONLY
SPACE ONLY				69							70				SPACE ONLY
SPACE ONLY				71							72				SPACE ONLY
SPACE ONLY				73							74				SPACE ONLY
SPACE ONLY				75							76				SPACE ONLY
SPACE ONLY				77							78				SPACE ONLY
SPACE ONLY				79							80				SPACE ONLY
SPACE ONLY				81							82				SPACE ONLY
SPACE ONLY				83							84				SPACE ONLY
					2880	2880	2880	0	0	0					
					2880	2880	2880	SEC 2 SUBTOTAL							CONNECTED LOAD SUBTOTAL 8640 VA
					24.00	24.00	24.00	SEC 2 AMPS/PHASE							

EQUIP RATING ___ AMPS RMS SYM.

CONTROL RELAY SCHEDULE

Panel Name: RA
Location: ELECTRICAL / COM ROOM
Transformer Voltage: 120V–24V
Control Circuit: A–37

Relay #	Description	Panel & Circuit	Load
1	ENTRANCE LIGHTING	A–1	100
2	OPEN PUBLIC AREA LIGHTING 1	A–5	1344
3	OPEN PUBLIC AREA LIGHTING 2	A–7	1344
4	OPEN PUBLIC AREA LIGHTING 3	A–9	960
5	OPEN PUBLIC AREA LIGHTING 4	A–11	1344
6	OPEN PUBLIC AREA LIGHTING 5	A–13	1152
7	EGRESS/NIGHT LIGHT	E–3	1500
8	SPARE		
9	SPARE		
10	SPARE		
11	SPARE		
12	SPARE		
13	SPACE ONLY		
14	SPACE ONLY		
15	SPACE ONLY		
16	SPACE ONLY		
17	SPACE ONLY		
18	SPACE ONLY		
19	SPACE ONLY		
20	SPACE ONLY		
21	SPACE ONLY		
22	SPACE ONLY		
23	SPACE ONLY		
24	SPACE ONLY		

GENERAL SHEET NOTES

1. ALL LIGHT LINE TYPES DENOTE EXISTING EQUIPMENT. (SHOWN FOR REFERENCE ONLY)

COPPER CONDUCTOR & CONDUIT SCHEDULE

TYPE	AMP.	COND. SIZE	CONDUCTOR QUAN.	CONDUCTOR SIZE	INSUL–ATION	EQ. GND. COND.
20	30	3/4"	2	10	THHN THWN	10
30	30	3/4"	3	10	THHN THWN	10
40	30	3/4"	4	10	THHN THWN	10
28	40	3/4"	2	8	THHN THWN	10
38	40	3/4"	3	8	THHN THWN	10
48	40	3/4"	4	8	THHN THWN	10
26	55	3/4"	2	6	THHN THWN	8
36	55	3/4"	3	6	THHN THWN	8
46	55	1"	4	6	THHN THWN	8
24	70	3/4"	2	4	THHN THWN	8
34	70	1"	3	4	THHN THWN	8
44	70	1–1/4"	4	4	THHN THWN	8
23	85	1"	2	3	THHN THWN	8
33	85	1"	3	3	THHN THWN	8
43	85	1–1/4"	4	3	THHN THWN	8
32	95	1–1/4"	3	2	THHN THWN	6
42	95	1–1/4"	4	2	THHN THWN	6
31	110	1–1/4"	3	1	THHN THWN	6
41	110	1–1/2"	4	1	THHN THWN	6
51	110	2"	5	1	THHN THWN	6
31X	150	1–1/2"	3	1/0	THHN THWN	6
41X	150	1–1/2"	4	1/0	THHN THWN	6
51X	150	2"	5	1/0	THHN THWN	6
32X	175	1–1/2"	3	2/0	THHN THWN	6
42X	175	2"	4	2/0	THHN THWN	6
52X	175	2"	5 *	2/0	THHN THWN	6
33X	200	2"	3	3/0	THHN THWN	6
43X	200	2"	4	3/0	THHN THWN	6
53X	200	2–1/2"	5	3/0	THHN THWN	6
34X	230	2"	3	4/0	THHN THWN	4
44X	230	2–1/2"	4	4/0	THHN THWN	4
54X	230	2–1/2"	5	4/0	THHN THWN	4
325	255	2"	3	250	THHN THWN	4
425	255	2–1/2"	4	250	THHN THWN	4
525	255	2–1/2"	5	250	THHN THWN	4
335	310	2–1/2"	3	350	THHN THWN	3
435	310	3"	4	350	THHN THWN	3
535	310	3"	5	350	THHN THWN	3
340	335	3"	3	400	THHN THWN	3
440	335	3"	4	400	THHN THWN	3
540	335	3"	5	400	THHN THWN	3
350	380	3–1/2"	3	500	XHHW	3
450	380	3–1/2"	4	500	XHHW	3
550	380	3–1/2"	5	500	XHHW	3

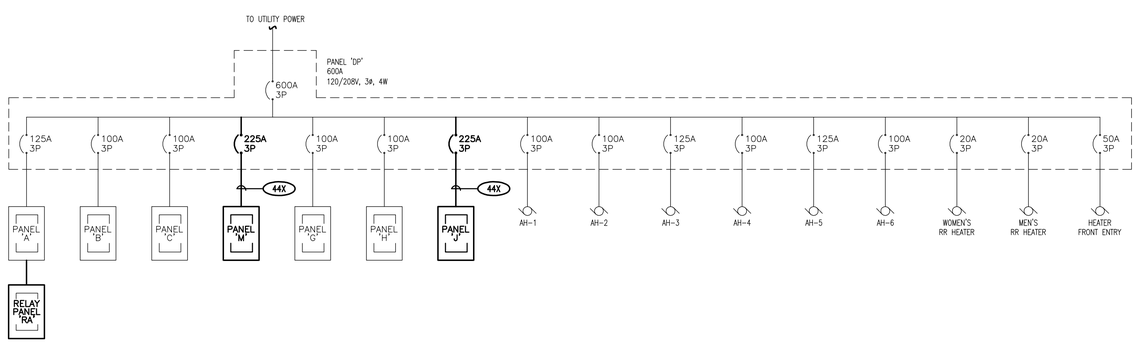

1 ONE–LINE DIAGRAM
NO SCALE

BNA CONSULTING
SALT LAKE ST.GEORGE
635 South State Street
Salt Lake City, UT 84111
P 801.322.2196
F 801.322.2305
www.bnaconsulting.com
© 2007 BNA CONSULTING

Axis Architects
352 S. DENVER ST. SUITE 205 – SALT LAKE CITY – UTAH 84111 – P. 355–3003 – F. 355–0113

DRIVERS LICENSE OFFICE State Fairpark
Conference Center - 155 N.1000 West, SLC, Utah 84116

Revision #	Date
.	
.	
.	
.	
.	

Axis Job # 0518
BNA Job # 07242A
Owner # DFCM # 07009370
Date 06-19-07
Drawn BNA
Checked E.F.

PANELBOARD SCHEDULES AND ONE-LINE DIAGRAM

E401

By: paul; Jul 11, 2007 – 3:47pm
F:\2007\242A\DRAW\242A–E401.dwg

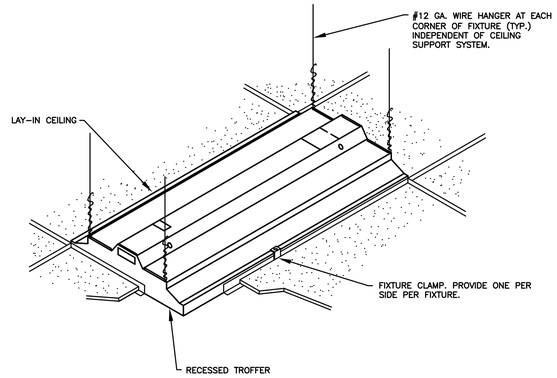

DIAGRAM A001 TYP. RECESSED FIXTURE MOUNTING
NTS

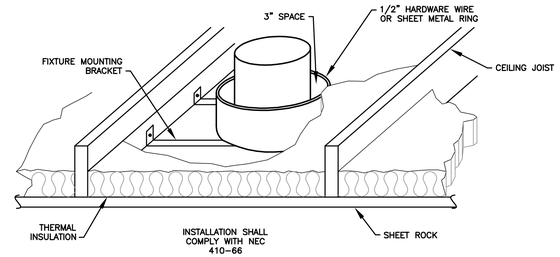

NOTE:
THIS REQUIREMENT IS FOR ALL DOWN LIGHT FIXTURES THAT ARE NOT 'IC' RATED

DIAGRAM A013 RECESSED DOWN LIGHT
NTS

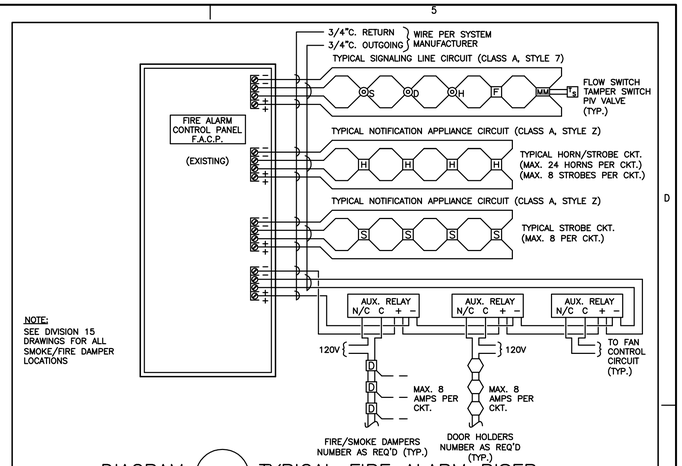

NOTE:
SEE DIVISION 15 DRAWINGS FOR ALL SMOKE/FIRE DAMPER LOCATIONS

DIAGRAM D002 TYPICAL FIRE ALARM RISER
NTS

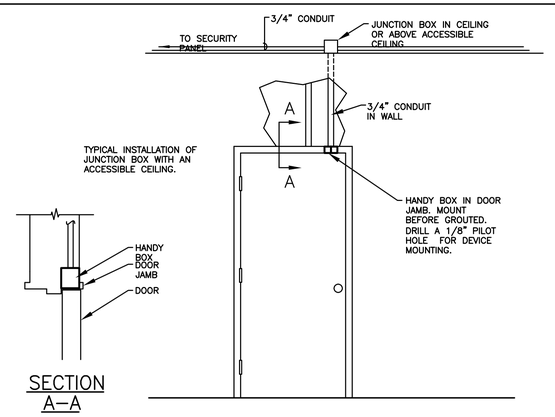

DIAGRAM E004 SECURITY SYSTEM DOOR SWITCH
NTS

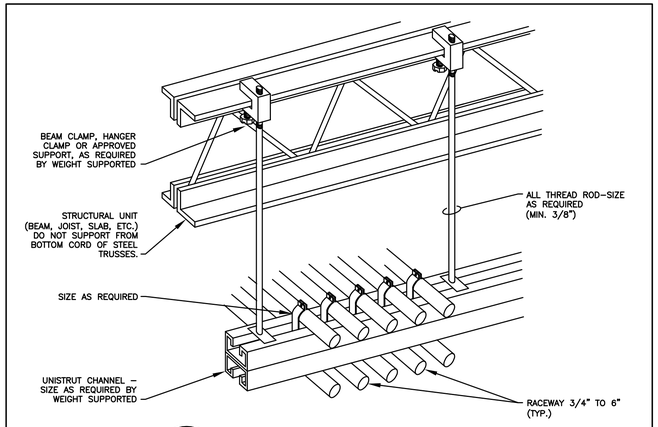

DIAGRAM H001 TYPICAL TRAPEZE CONDUIT RACK
NTS

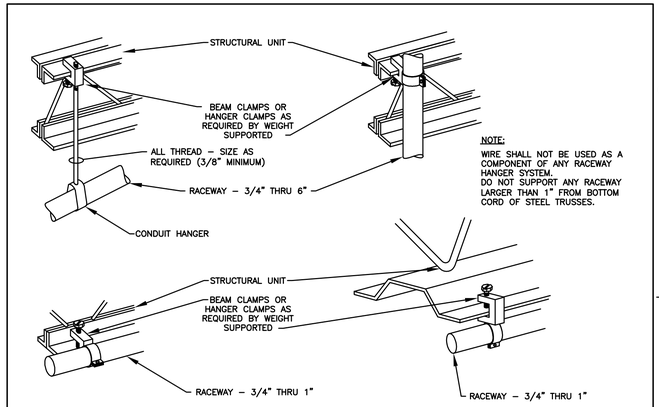

NOTE:
WIRE SHALL NOT BE USED AS A COMPONENT OF ANY RACEWAY HANGER SYSTEM.
DO NOT SUPPORT ANY RACEWAY LARGER THAN 1" FROM BOTTOM CORD OF STEEL TRUSSES.

DIAGRAM H003 TYPICAL RACEWAY SUPPORT METHODS
NTS

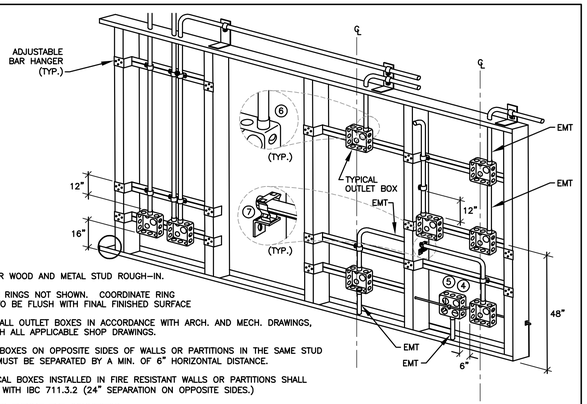

NOTES:
1. TYP. FOR WOOD AND METAL STUD ROUGH-IN.
2. PLASTER RINGS NOT SHOWN. COORDINATE RING DEPTH TO BE FLUSH WITH FINAL FINISHED SURFACE
3. LOCATE ALL OUTLET BOXES IN ACCORDANCE WITH ARCH. AND MECH. DRAWINGS, AND WITH ALL APPLICABLE SHOP DRAWINGS.
4. OUTLET BOXES ON OPPOSITE SIDES OF WALLS OR PARTITIONS IN THE SAME STUD SPACE MUST BE SEPARATED BY A MIN. OF 6" HORIZONTAL DISTANCE.
5. ELECTRICAL BOXES INSTALLED IN FIRE RESISTANT WALLS OR PARTITIONS SHALL COMPLY WITH IBC 711.3.2 (24" SEPARATION ON OPPOSITE SIDES.)
6. INSULATED THROAT EMT CONNECTOR.
7. CADDY FASTENER, THROUGH STUD CABLE/CONDUIT SUPPORT 'FB12P'.

DIAGRAM H004 TYPICAL ROUGH IN REQUIREMENTS
NTS

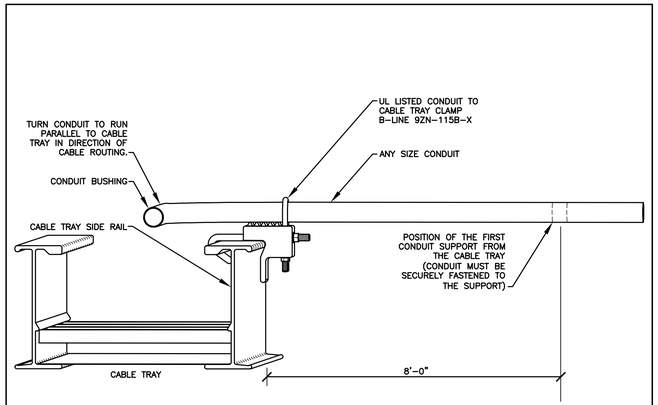

DIAGRAM I006 CONDUIT TO CABLE TRAY
NTS

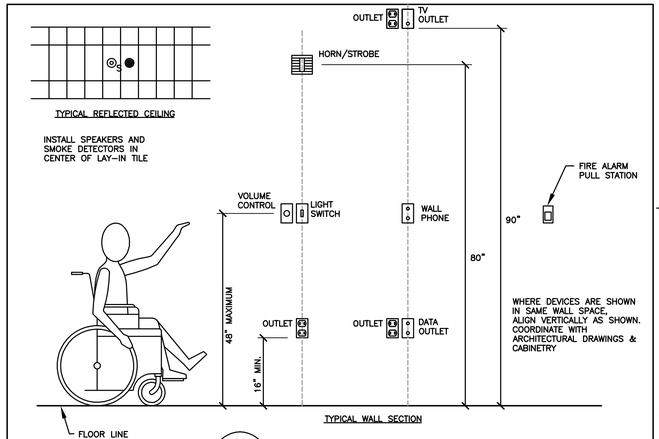

DIAGRAM R001 DEVICE MOUNTING HEIGHTS
NTS

BNA CONSULTING
SALT LAKE ST.GEORGE
635 South State Street
Salt Lake City, UT 84111
P 801.322.2196
F 801.322.2305
www.bnaconsulting.com

© 2007 BNA CONSULTING

Axis Architects
352 S. DENVER ST. SUITE 205 – SALT LAKE CITY – UTAH 84111 – P. 355-3003 – F. 355-0113

DRIVERS LICENSE OFFICE State Fairpark

Conference Center - 155 N.1000 West, SLC. Utah 84116

Revision #	Date
.	
.	
.	
.	

Axis Job # 0518
BNA Job # 07242A
Owner # DFCM # 07009370
Date 06-19-07
Drawn BNA
Checked E.F.

ELECTRICAL DIAGRAMS

E501

By: pauz Jul 11, 2007 – 3:47pm
F:\2007\242A\DRAW\242A-E501.dwg

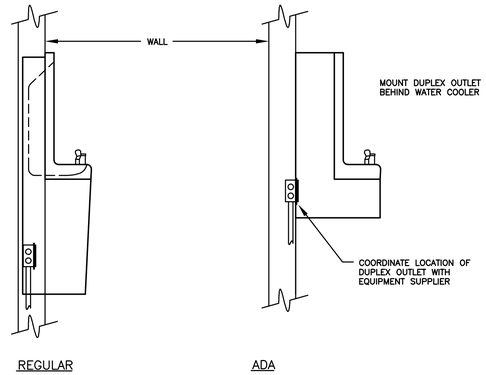

DIAGRAM (R002) ELECTRIC WATER COOLER (EWC)
NTS

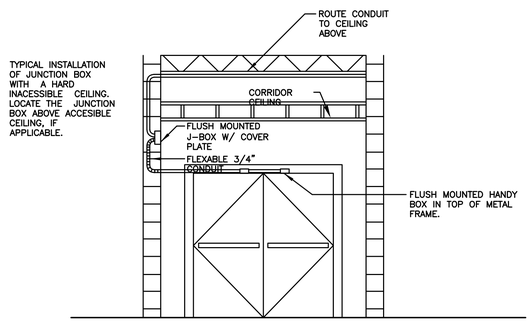

DIAGRAM (E006) SECURITY SYSTEM DOUBLE DOOR SWITCH

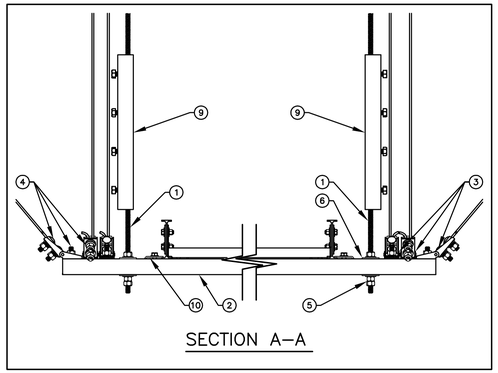

SECTION A–A

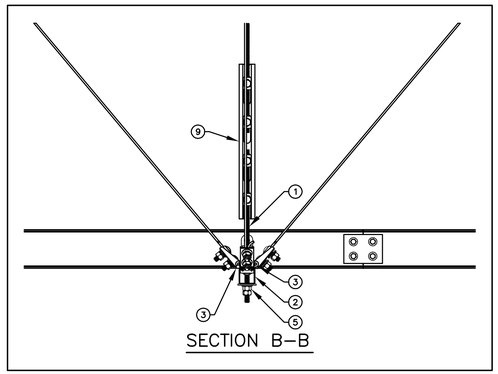

SECTION B–B

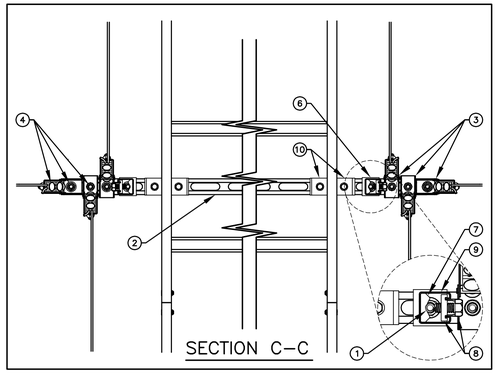

SECTION C–C

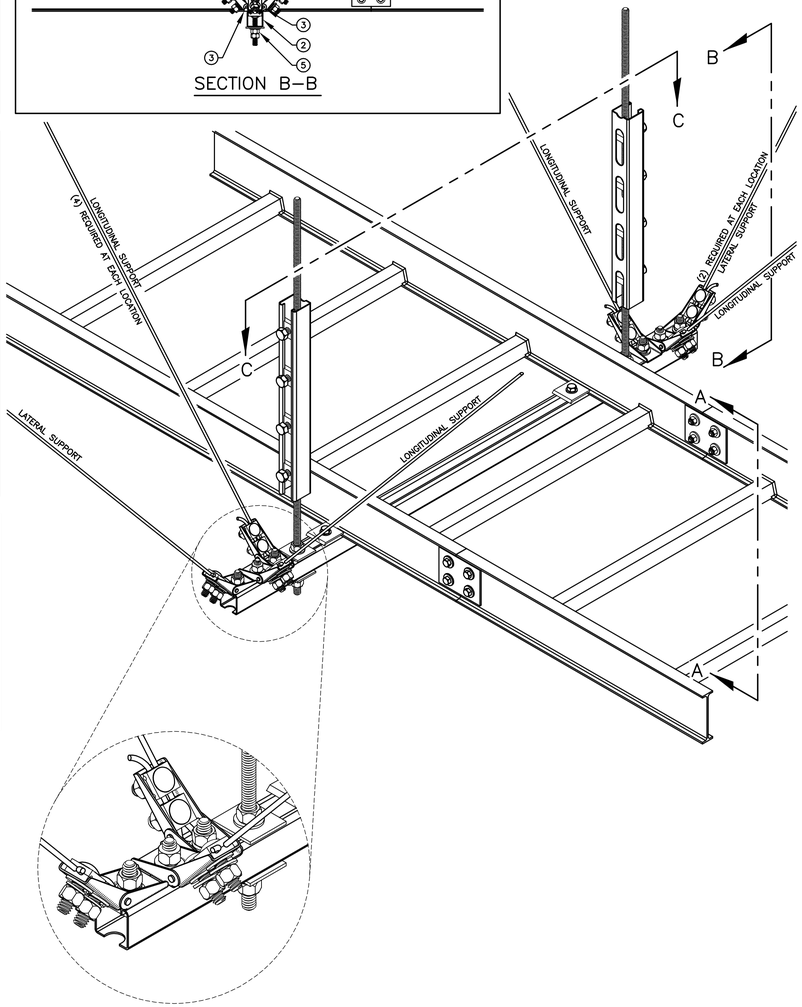

PARTS LIST

ITEM No.	DESCRIPTION	SIZE	CATALOG No. UNISTRUT
1	THREADED ROD (MIN. MODULUS OF OF ELASTICITY = 29×10^6 LBS/IN)	SEE SCHEDULE FOR DIAMETER	–
2	METAL FRAMING CHANNEL	1–5/8"x1–5/8"	P1000
3	CABLE BRACE SWIVEL ANCHOR	SEE TABLE	MASON IND. SCB–X
4	HEX HEAD CAP SCREW WITH SPRING NUT	1/2"–13"	HHCS/P1010
5	FLAT WASHER WITH HEX NUT	3/8"	–
6	FLAT PLATE FITTING WITH HEX NUT	3/8" OR 1/2" AS REQ'D	P1063 OR P1064
7	CRADLE	–	P2485
8	HEX HEAD CAP SCREW WITH NUT	3/8"x1"	HHCS/P2008
9	SLOTTED METAL FRAMING CHANNEL	1–5/8"x1–5/8"	P1000T
10	CABLE TRAY ATTACHMENT CLIP W/CAP SCREW & NUT	–	–

NOTES:

1. PROVIDE LONGITUDINAL AND LATERAL SUPPORT SPACING IN ACCORDANCE WITH THE FOLLOWING:

MAX CABLE TRAY PLUS CABLE WT.	VERTICAL SUPPORT SPACING	LATERAL SUPPORT SPACING	LONGITUDINAL SUPPORT SPACING	ROD DIAMETER	CABLE BRACE SWIVEL ANCHOR & CABLE
POUNDS/FOOT	FEET	FEET	FEET	INCHES	
25	10	10	20	.375	SCB2
50	10	10	20	.500	SCB3

2. PROVIDE METAL FRAMING CHANNEL ON ALL VERTICAL SUPPORTS WHEN ROD LENGTH EXCEEDS 14". STIFFENER CLIP SPACING SHALL BE 12".
3. SEE SPECIFICATIONS FOR APPROVED FITTINGS FOR ATTACHMENT TO STRUCTURE.

GENERAL NOTES

1. COORDINATE ROUTING OF CABLE TRAYS AND SUPPORT SYSTEMS WITH DIVISION 15.
2. DO NOT SUPPORT FROM BOTTOM CORD OF STEEL TRUSSES.

DIAGRAM (H006) SEISMIC BRACING FOR CABLE TRAY/CABLES
(EXPOSED STRUCTURE OR ABOVE CEILING ONLY)

BNA CONSULTING
SALT LAKE ST.GEORGE
635 South State Street
Salt Lake City, UT 84111
P 801.322.2196
F 801.322.2305
www.bnaconsulting.com

© 2007 BNA CONSULTING

Axis Architects
352 S. DENVER ST. SUITE 205 – SALT LAKE CITY – UTAH 84111 – P. 355–3003 – F. 355–0113

DRIVERS LICENSE OFFICE State Fairpark

Conference Center - 155 N.1000 West, SLC, Utah 84116

Revision #	Date
.	
.	
.	
.	
.	

Axis Job #	0518
BNA Job #	07242A
Owner #	DFCM # 07009370
Date	06-19-07
Drawn	BNA
Checked	E.F.

ELECTRICAL DIAGRAMS

E502

By: paul; Jul 11, 2007 – 3:47pm
F:\2007\242A\DRAW\242A–E502.dwg

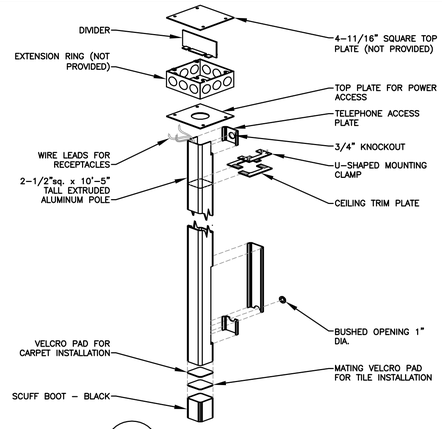

DIAGRAM R003 TWO CHANNEL/POWER POLE

NTS

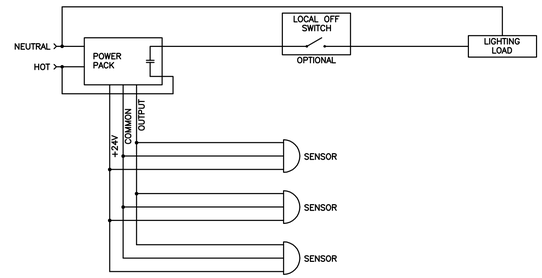

DIAGRAM S009 MULTIPLE SENSOR CONTROLLING ONE POWER PACK

NTS

BNA CONSULTING
SALT LAKE ST.GEORGE
635 South State Street
Salt Lake City, Utah 84111
P 801.322.2196
F 801.322.2305
www.bnaconsulting.com

© 2007 BNA CONSULTING

Axis Architects
352 S. DENVER ST. SUITE 205 - SALT LAKE CITY - UTAH 84111 - P. 355-3003 - F 355-0113

DFCM

DRIVERS LICENSE OFFICE State Fairpark

Conference Center - 155 N.1000 West, SLC. Utah 84116

Revision #	Date
.	
.	
.	
.	
.	

Axis Job #	0518
BNA Job #	07242A
Owner #	DFCM # 07009370
Date	06-19-07
Drawn	BNA
Checked	E.F.

ELECTRICAL DIAGRAMS

E503

By: paul; Jul 11, 2007 - 3:47pm
F:\2007\242A\DRAW\242A-E503.dwg