SALT LAKE COMMUNITY COLLEGE

SOUTH CITY CAMPUS
GRAND THEATER CATWALK REMODEL

DFCM PROJECT NO. 06175670
ARCHITECT PROJECT NO.: B06-057

LICENSED PROFESSIONAL ARCHITECT
WALLACE N. COOPER II
No. 117451
STATE OF UTAH

ARCHITECT

COOPER ROBERTS SIMONSEN
& ASSOCIATES
700 NORTH 200 WEST
SALT LAKE CITY, UT 84103
(801) 355-5915
FAX (801) 355-9885
www.crsa-us.com
davet@crsa-us.com

STRUCTURAL ENGINEER

CALDER RICHARDS CONSULTING ENGINEERS
2015 S. 1100 E.
SALT LAKE CITY, UT 84106
(801) 328-2726
FAX (801) 328-2737
www.crceng.com
stephen@crceng.com

CODE ANALYSIS

APPLICABLE CODES

	Year		Year
International Building Code	2006	National Electrical Code	2006
International Mechanical Code	N/A	Uniform Code for Building Conservation	N/A
International Plumbing Code	N/A	ADA Accessibility Guidelines	N/A
International Fire Code	2006		
International Energy Conservation Code	N/A		

A. Occupancy and Group: EXISTING ACCESSORY TO GROUP A-1 (THEATER STAGE FLY LOFT)

Change in Use: Yes ___ No X Mixed Occupancy: Yes X No ___
Special Use and Occupancy (e.g. High Rise, Covered Mall): N/A

B. Seismic Design Category: D Design Wind Speed: 90 mph

C. Type of Construction (circle one):

I/A I/B II/A (II/B) III/A III/B IV/HT V/A V/B

D. Fire Resistance Rating Requirements for the Exterior Walls based on the fire separation distance (in hours): Table 602

North: EX. South: EX. East: EX. West: EX.

E. Mixed Occupancies: Yes Non-separated Uses: Yes

F. Sprinklers:

Required: EX. Provided: EX. Type of Sprinkler System: NFPA 13

G. Number of Stories: 3 Building Height: EX.

H. Actual Area per Floor (square feet): EXISTING - NO CHANGE IN USE

I. Tabular Area (At): N/A - EXISTING NON-CONFORMING

J: Area Modifications: NOT USED

a) $Aa = At + \left[\frac{At \cdot If}{100}\right] + \left[\frac{At \cdot If}{100}\right]$ $\quad If = 100\left[\frac{F}{P} - 0.25\right]\frac{W}{30}$

b) Sum of the Ratio Calculations for Mixed Occupancies:
$\frac{\text{Actual Area}}{\text{Allowable Area}} \leq 1$

c) Total Allowable Area for:
1) One Story: N/A
2) Two Story: Aa (2) N/A
3) Three Story: Aa (3) N/A - EXISTING NON-CONFORMING BUILDING

d) Unlimited Area Building: Yes ___ No X Code Section: Table 503

K: Fire Resistance Rating Requirements for Building Elements (hours). N/A - ALL EXISTING,

L: Design Occupant Load: <10 - SERVICE AND MAINTENANCE ACCESS ONLY
Minimum Exit Width: EXISTING SINGLE STRIPS LADDER. ROOF HATCH AVAILABLE.

M. Minimum Number of Required Plumbing Facilities: N/A THIS PROJECT

FOOTNOTES:

1. BUILDING IS EXISTING, NON-CONFORMING, CONSTRUCTED IN PHASES FROM 1930 THROUGH PRESENT, WITH MANY ADDITIONS AND ALTERATIONS. PRIMARY UPGRADES PERFORMED UNDER UBC BETWEEN 1980 AND PRESENT. CODE-COMPLIANCE UPGRADES INCLUDE PROVISION OF FIRE SPRINKLERS THROUGHOUT, AND DIVISION OF BUILDING INTO MULTIPLE FIRE AREAS WITH AREA SEPARATION WALLS (PER UBC)

2. WORK OF THIS CONTRACT IS RESTRICTED TO REPLACEMENT OF EXISTING, WOOD CATWALK FLOOR WITH NEW, METAL-PLANK FLOOR, AND ADDITION OF UPGRADED SAFETY GUARDRAILS.

SHEET INDEX

SHEET	DESCRIPTION
	GENERAL
GI001	COVER SHEET & SHEET INDEX
	ARCHITECTURAL
AE101	FLOOR PLAN - CATWALK
	STRUCTURAL
S101	FRAMING PLAN & DETAILS

KEY PLAN - SOUTH CITY CAMPUS

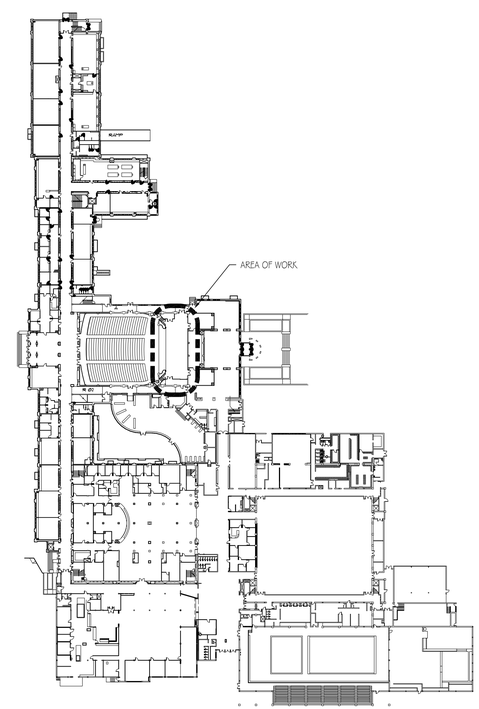

SYMBOLS LEGEND

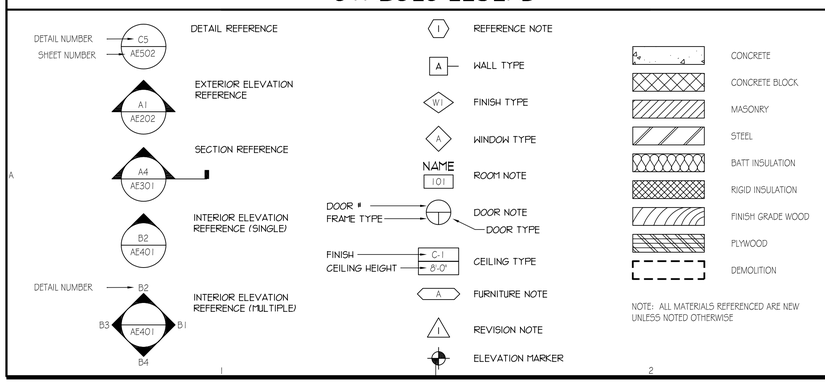

NOTE: ALL MATERIALS REFERENCED ARE NEW UNLESS NOTED OTHERWISE

VICINITY MAP

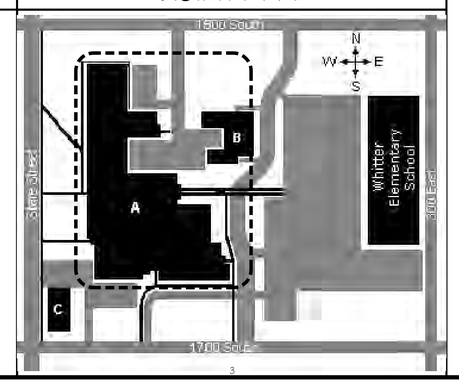

COOPER
ROBERTS
SIMONSEN
ARCHITECTURE

crsa

700 NORTH 200 WEST
SALT LAKE CITY,UTAH 84103
(801) 355-5915
(801) 355-9885 FAX
WWW.CRSARCHITECTS.COM

STRUCTURAL ENGINEER
CALDER RICHARDS CONSULTING ENGINEERS
2015 SOUTH 1100 EAST
SALT LAKE CITY, UT 84106
(801) 328-2726 (801) 328-2737
www.crceng.com stephen@crceng.com

SCC GRAND THEATER
GRID SYSTEM
REPLACEMENT
1575 SOUTH STATE
SALT LAKE CITY, UTAH 84115

SALT LAKE
COMMUNITY COLLEGE

4600 SOUTH REDWOOD ROAD
SALT LAKE CITY, UTAH 84130

CD	02/21/07 CONTRACT DOCUMENTS
DD	
PROJECT NO:	B06-057
CAD DWG FILE:	gi001.dwg
DRAWN BY:	
CHECKED BY:	

GENERAL
INFORMATION

GI001

SHEET # OF #

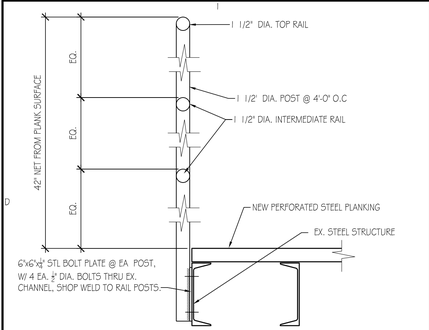

E1 GUARDRAIL DETAIL

1 1/2" = 1'-0"

NOTE: COORDINATE WITH FIELD CONDITIONS TO PASS RAILING THRU EX. TRUSS.

AE101-E1-08

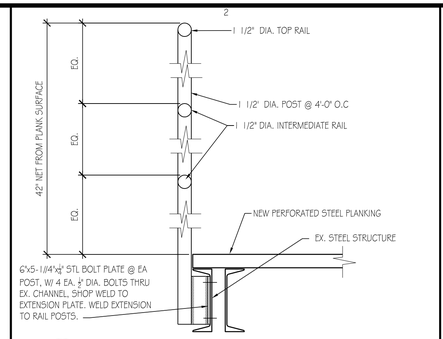

E2 GUARDRAIL DETAIL

1 1/2" = 1'-0"

NOTE: COORDINATE WITH FIELD CONDITIONS TO PASS RAILING THRU EX. TRUSS.

AE101-E1-08

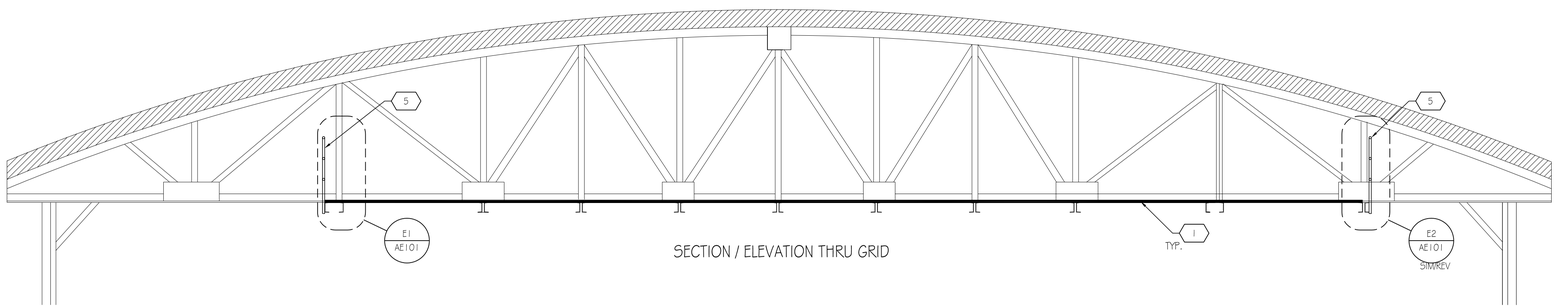

SECTION / ELEVATION THRU GRID

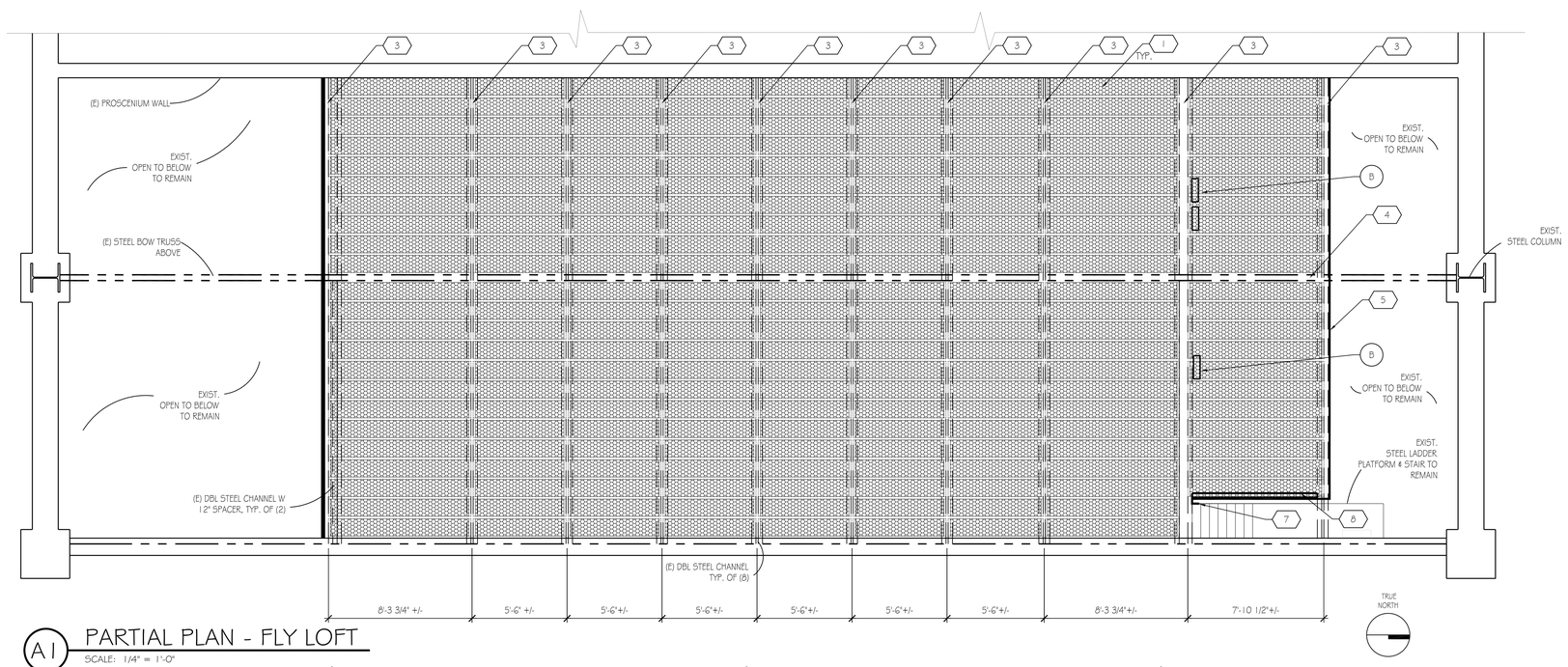

A1 PARTIAL PLAN - FLY LOFT

SCALE: 1/4" = 1'-0"

DEMOLITION NOTES

A. REMOVE ALL EXISTING WOOD PLANKING ,ASSOCIATED WOOD FRAMING,OUT OF SERVICE ATTCHMENTS AND PULLEYS.

B. DISMOUNT, PROVIDE TEMP. SUPPORT & REMOUNT EXISTING ELEC. BOXES AND CONDUITS SERVING EXISTING ELEC. DROPS. (LOCATIONS APPROX. FIELD VERIFY QUANTITY, LOCATIONS AND CONDITIONS PRIOR TO BID.)

GENERAL NOTES

A. FIELD VERIFY ALL MEASUREMENTS.

B. MAKE ALL PLANK SAME DEPTH. GAUGE MAY BE ADJUSTED TO MEET SPAN REQUIREMENTS. SPAN VARIES FROM BAY-TO-BAY. FIELD VERIFY.

C. SPACE BETWEEN PLANKS APPROXIMATELY 1 INCH NET MINIMUM. SPACE MAY BE ADJUSTED FOR EVEN SPACING OF PLANKS, BUT MAY NOT EXCEED 1-3/4 INCHES.

D. PLANK WIDTHS ARE ASSUMED TO BE 12 INCHES, AND PLANK LAYOUT AS SHOWN ON DRAWINGS ASSUME PLANK SPACING OF BETWEEN 1-½ INCHES AND 1-¾ INCHES. SELECTED PERIMETER PLANKS MAY BE NARROWER, OR UP TO 18 INCHES WIDE IN ORDER TO MATCH PLANK MODULE TO FIT WITHIN EXISTING STRUCTURE. PROVIDE LAYOUT PLAN FOR ARCHITECTS APPROVAL PRIOR TO PURCHASE OF PLANKING.

REFERENCE NOTES

1. STEEL PERFORATED PLANKING, DEPTH AND GAUGE PER SPEC. 12 INCHES WIDE, SPACE CLEAR BETWEEN PLANKS AS NOTED, COORD. W/ STRUCT.

2. (NOT USED)

3. REMOVABLE COVER PLATE AND ANGLE ATTACHMENTS. COORD. W/ STRUCT.

4. INTERUPT PLANKS @ EXISTING TRUSS.

5. NEW CONTINUOUS GUARDRAIL.

6. (NOT USED)

7. ATTACH NEW GUARDRAIL TO EXISTING LADDER HANDRAIL

8. STRUCTURAL SUPPORT TO RUN BETWEEN EXISTING STRUCTURAL BEAMS COORDINATE W/ STRUCTURAL.

9. (NOT USED)

COOPER ROBERTS SIMONSEN ARCHITECTURE

crsa

700 NORTH 200 WEST
SALT LAKE CITY,UTAH 84103
(801) 355-5915
(801) 355-9885 FAX
WWW.CRSARCHITECTS.COM

STRUCTURAL ENGINEER
CALDER RICHARDS CONSULTING ENGINEERS
2015 SOUTH 1100 EAST
SALT LAKE CITY, UT 84106
(801) 328-2726 (801) 328-2737
www.crseng.com stephen@crseng.com

SCC GRAND THEATER GRID SYSTEM REPLACEMENT
1575 SOUTH STATE
SALT LAKE CITY, UTAH 84115

SALT LAKE COMMUNITY COLLEGE

4600 SOUTH REDWOOD ROAD
SALT LAKE CITY, UTAH 84130

CD	02/21/07 CONTRACT DOCUMENTS
DD	
PROJECT NO:	B06-057
CAD DWG FILE:	ae101.dwg
DRAWN BY:	
CHECKED BY:	

CATWALK FLOOR PLAN

AE101

SHEET # OF #

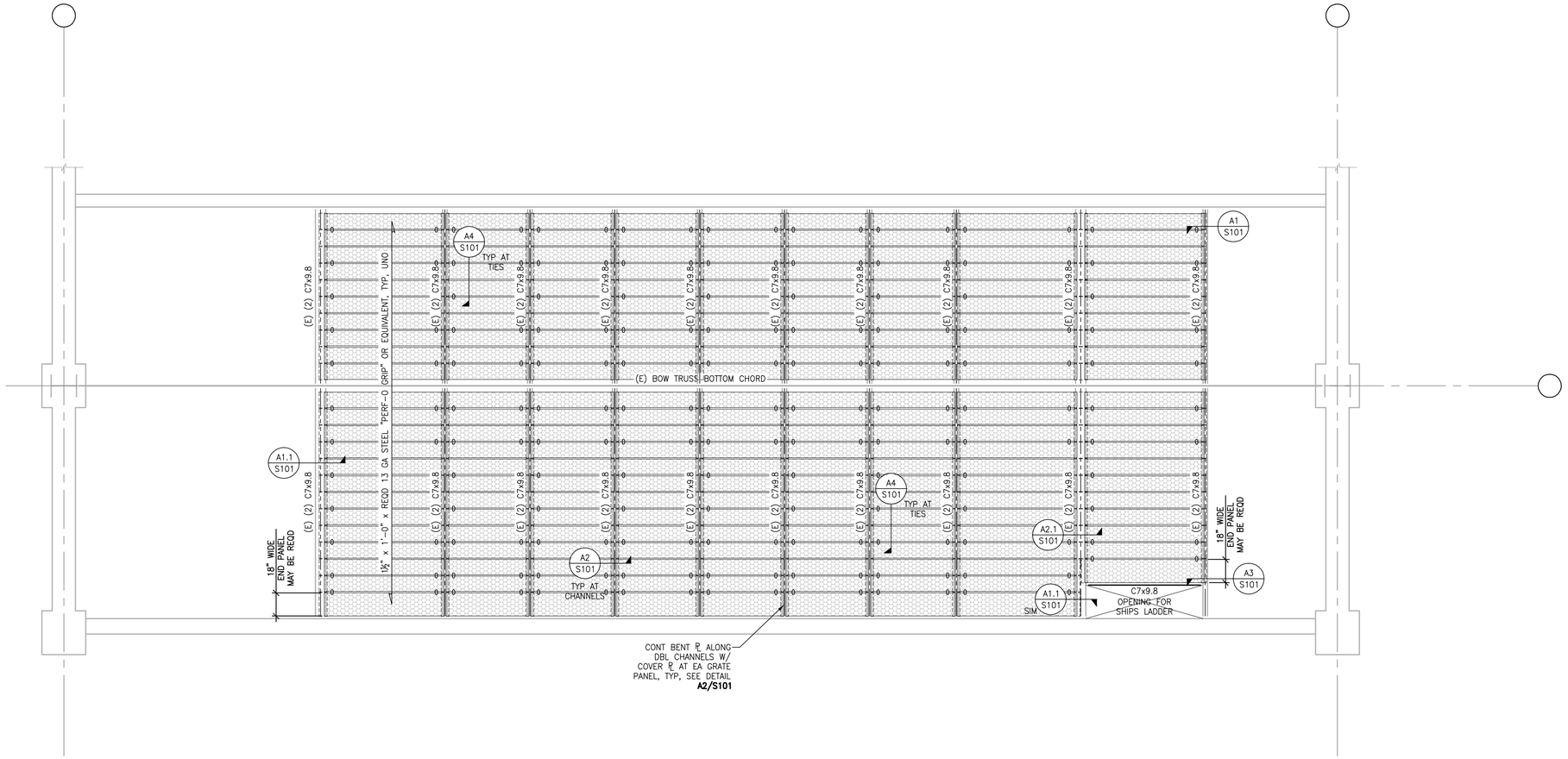

FLY LOFT FRAMING PLAN

SCALE: 1/4" = 1'-0"

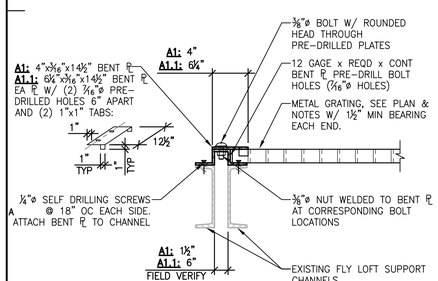

A1 A1.1 SCALE: 1 1/2" = 1'-0"

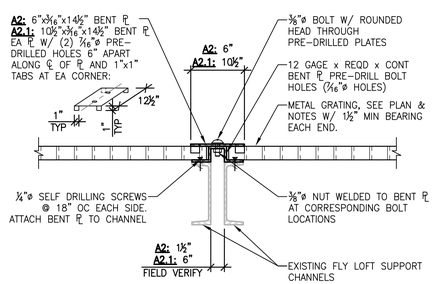

A2 A2.1 SCALE: 1 1/2" = 1'-0"

NOTE: SEE DETAIL **A1/S101** FOR ADDITIONAL INFORMATION

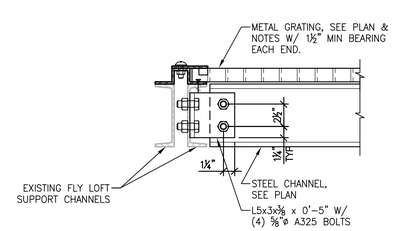

A3 SCALE: 1 1/2" = 1'-0"

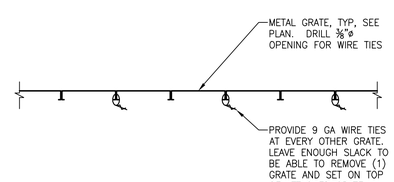

A4 SCALE: 3/4" = 1'-0"

FLY LOFT FRAMING NOTES:

- ◯ CIRCLED NOTES ARE KEYED ON PLAN.
1. SEE STRUCTURAL NOTES ON **THIS SHEET** FOR ADDITIONAL INFORMATION.
2. SHOP PRIME ALL STEEL.
3. FIELD VERIFY ALL DIMENSIONS AND CHANNEL LAYOUT, INCLUDING DIRECTION OF CHANNEL LEGS.

LEGEND:

- CHANGE IN ELEVATION
- BEAM OR GIRDER
- JOIST, PURLIN, RAFTER, OR TRUSS
- STEEL COLS TUBE, WIDE FLANGE, PIPE
- CONC WALL
- STEEL GRATING
- SPECIAL DECK AREA
- OPEN — OPENING IN DECK

COOPER ROBERTS SIMONSEN ARCHITECTURE

crsa

700 NORTH 200 WEST
SALT LAKE CITY,UTAH 84103
(801) 355-5915
(801) 355-9885 FAX
WWW.CRSARCHITECTS.COM

CALDER RICHARDS CONSULTING ENGINEERS
2015 SOUTH 1100 EAST, SALT LAKE CITY, UT 84106
T: 801.466.1899 F: 801.467.2495

SLCC GRAND THEATER CATWALKS REMODEL

1575 SOUTH STATE
SALT LAKE CITY, UTAH 84115

SALT LAKE COMMUNITY COLLEGE

4600 SOUTH REDWOOD ROAD
SALT LAKE CITY, UTAH 84130

CD	02-21-07 CONTRACT DOCUMENTS
DD	
PROJECT NO:	B06-057
CAD DWG FILE:	S101.DWG
DRAWN BY:	DJK
CHECKED BY:	SC

FLY LOFT FRAMING PLAN

S101

#

X:\Project Files\2006\06100.03 SLCC Theater Fly Loft\Drawings\S101.dwg, 24x36, 2/21/2007 4:33:31 PM