CAMP FLOYD STAGECOACH INN STATE PARK & CAMP FLOYD CEMETERY

SPRINKLER SYSTEM IMPROVEMENTS

Mark Trotter - Superintendent

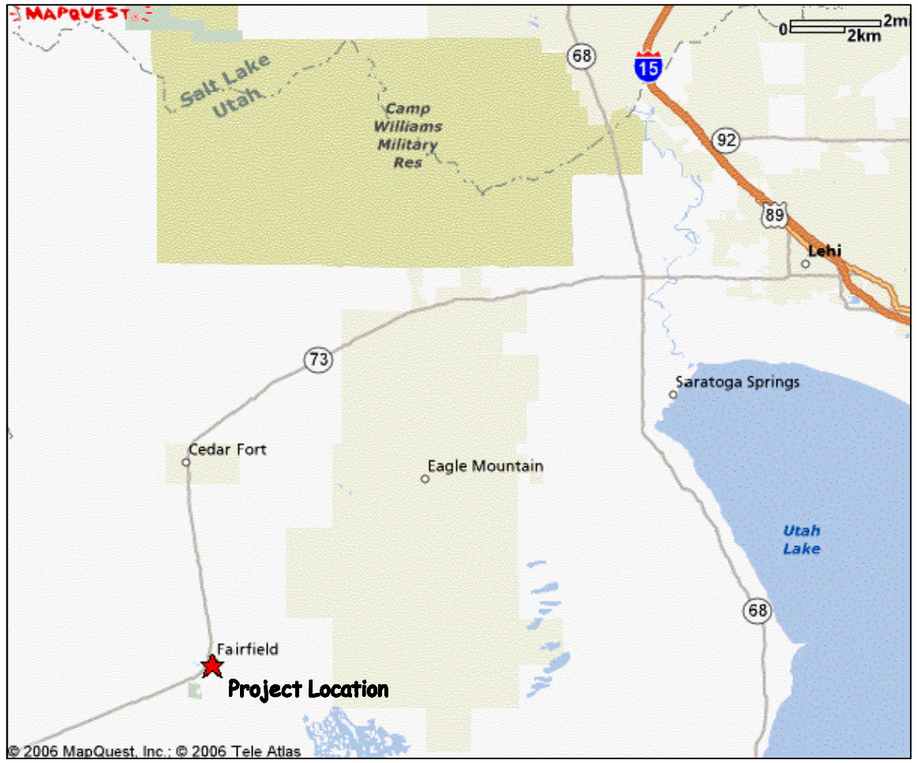

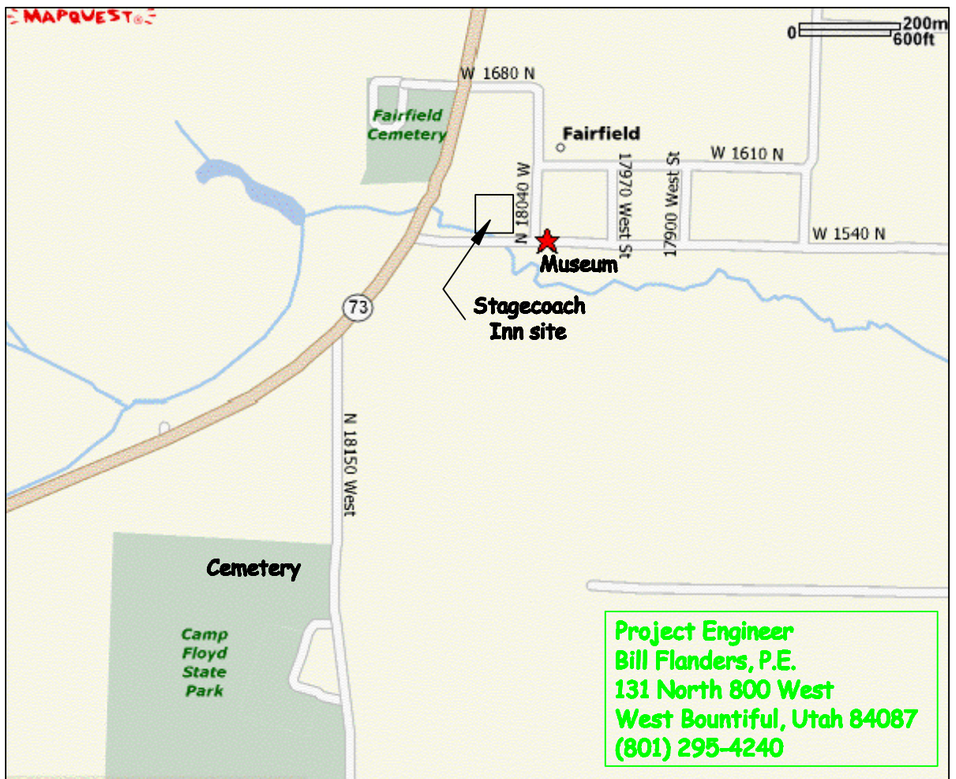

Project Engineer
Bill Flanders, P.E.
131 North 800 West
West Bountiful, Utah 84087
(801) 295-4240

SHEET INDEX

Title Page	Vicinity map, sheet index and Legend
Sheet S-1	Stagecoach Inn system layout
Sheet S-2	Electrical system schematic drawing and notes
Sheet S-3	Mechanical / Plumbing schematic drawing and notes
Sheet S-4	Mechanical room / Manifold design / Controller settings / Storage Tank
Sheet S-5	Pump line configuration
Sheet S-6	Cemetery system layout
Sheet S-7	Site preparation plan - Tree, bush and stump removal
Sheet S-8	Mechanical and Electrical system schemetic
Sheet S-9	Storage tank, booster pump and manifold design
Sheet S-10	Pumpline configuration
Sheet S-11	Project notes and details

LEGEND AND ABBREVIATIONS

- EXISTING FENCE
- SANITARY SEWER LINE
- STORM DRAIN LINE
- EXISTING GAS LINE
- WATER LINE
- ELECTRICAL SERVICE
- EXISTING HIGHWAY RIGHT-OF-WAY LINE
- OVERHEAD POWER LINE
- SPRINKLER LINE AND SIZE
- WATER VALVE
- FIRE HYDRANT
- SPRINKLER (various models)
- EVERGREEN TREE
- DECIDUOUS TREE
- SHRUB OR BUSH

SS	SANITARY SEWER
SSMH	SANITARY SEWER MANHOLE
SD	STORM DRAIN
SDCB	STORM DRAIN CATCH BASIN
SDIB	STORM DRAIN INLET BOX
EXIST.	EXISTING
N/A	NO ACCESS
STA.	STATION
IE	INVERT ELEVATION
N.	NORTHING COORDINATE
E.	EASTING COORDINATE
DIA.	DIAMETER
R/W	RIGHT-OF-WAY
T.O.P.	TOP OF PIPE

Camp Floyd / Stagecoach Inn State Park and Museum
18035 West 1540 North
Fairfield , UT 84013 (801) 768-8932

CAMP FLOYD STATE PARK
SPRINKLER SYSTEM

11 x 17
Job Numbe
2006-XX
Date
OCT. '06
Sheet Number
Title

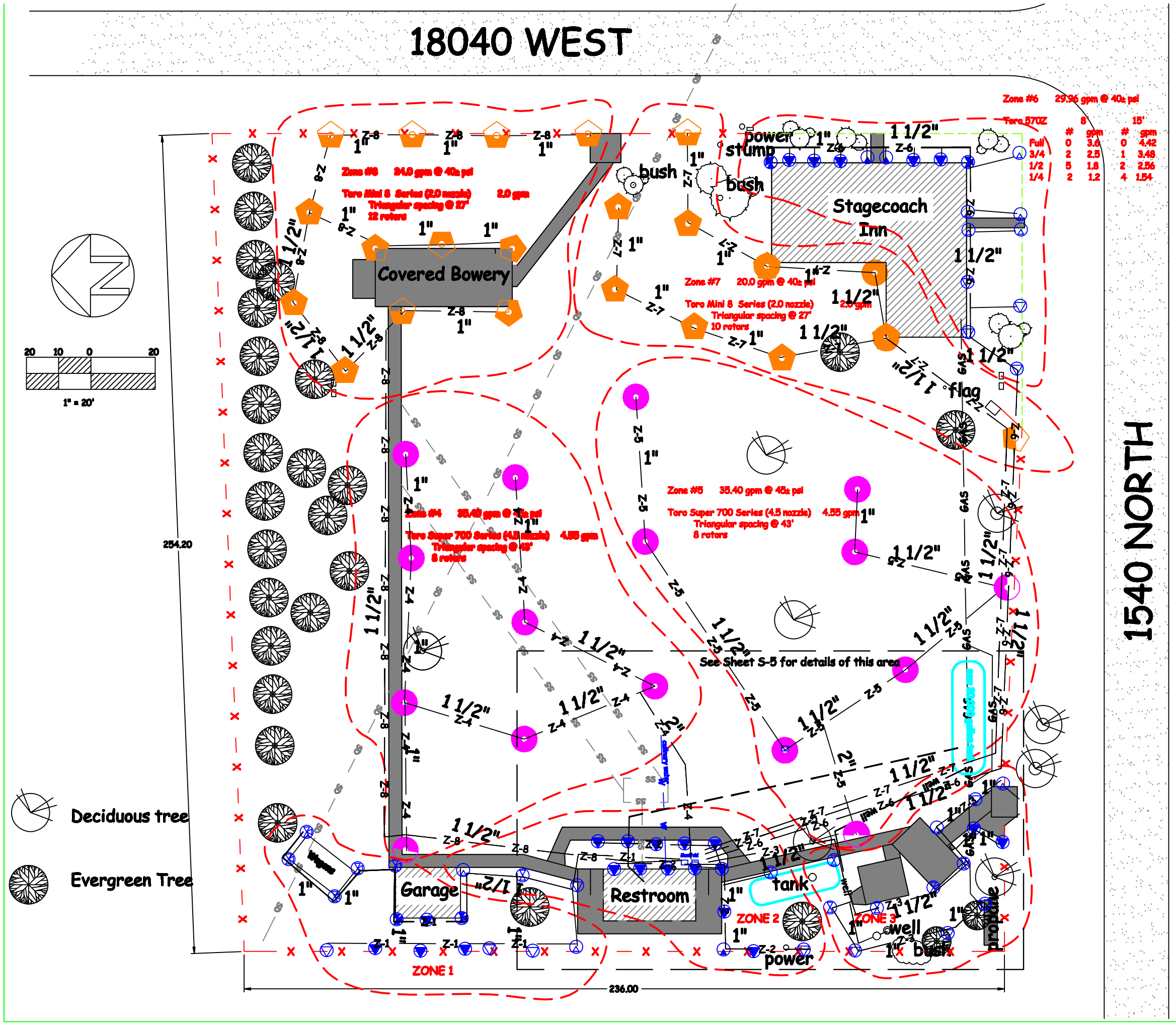

Description	PSI	GPM	Radius	Arc
Toro Super 700 4.5 nozzle	40	4.55	43'	full
Toro Super 700 4.5 nozzle	40	4.55	43'	3/4
Toro Super 700 4.5 nozzle	40	4.55	43'	half
Toro Super 700 4.5 nozzle	40	4.55	43'	1/4

Description	PSI	GPM	Radius	Arc
Toro Mini 8 2.0 nozzle	40	2.0	27'	full
Toro Mini 8 2.0 nozzle	40	2.0	27'	3/4
Toro Mini 8 2.0 nozzle	40	2.0	27'	half
Toro Mini 8 2.0 nozzle	40	2.0	27'	1/4

Description	PSI	GPM	Radius	Arc
Toro 570Z-4P 8' series	40	3.6	8'	full
Toro 570Z-4P 8' series	40	2.5	8'	3/4
Toro 570Z-4P 8' series	40	1.8	8'	half
Toro 570Z-4P 8' series	40	1.2	8'	1/4

Description	PSI	GPM	Radius	Arc
Toro 570Z-4P 15' series	40	4.42	15'	full
Toro 570Z-4P 15' series	40	3.48	15'	3/4
Toro 570Z-4P 15' series	40	2.56	15'	half
Toro 570Z-4P 15' series	40	1.54	15'	1/4

Zone #1 38.82 gpm @ 40± psi

Toro 570Z	8' #	8' gpm	15' #	15' gpm
Full	0	3.6	0	4.42
3/4	2	2.5	5	3.48
1/2	4	1.8	3	2.56
1/4	0	1.2	1	1.54

Zone #2 38.30 gpm @ 40± psi

Toro 570Z	8' #	8' gpm	15' #	15' gpm
Full	0	3.6	2	4.42
3/4	0	2.5	0	3.48
1/2	12	1.8	2	2.56
1/4	1	1.2	1	1.54

Zone #3 39.70 gpm @ 40± psi

Toro 570Z	8' #	8' gpm	15' #	15' gpm
Full	0	3.6	3	4.42
3/4	0	2.5	2	3.48
1/2	0	1.8	4	2.56
1/4	2	1.2	2	1.54

Camp Floyd / Stagecoach Inn State Park and Museum
18035 West 1540 North
Fairfield , UT 84013 (801) 768-8932

CAMP FLOYD STAGECOACH INN
SPRINKLER SYSTEM

11 x 17
Job Numbe
2006-XX
Date
OCT. '06
Sheet Number
S-1

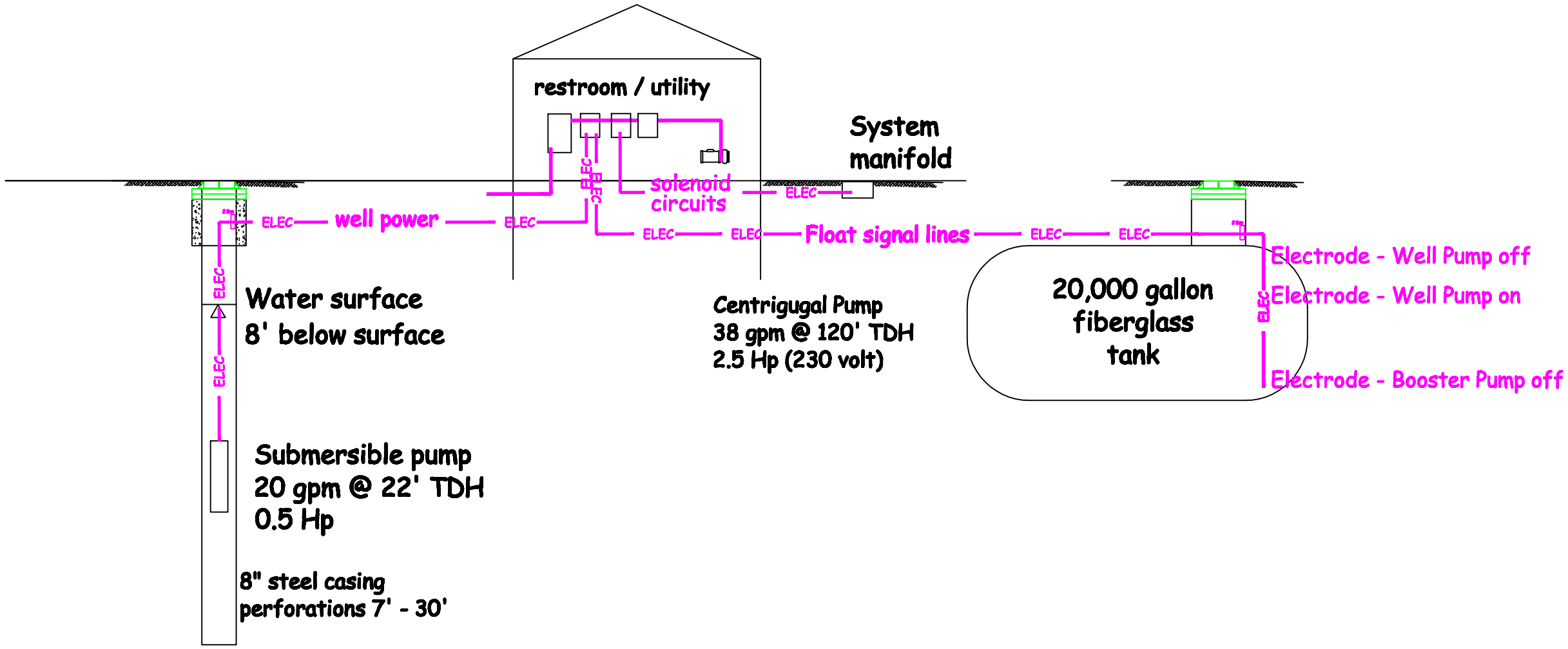

Electrical System Notes

1. Reuse the existing Controller, (RainBird ESP-8TM)
2. Reuse the existing booster pump start panel
3. Install new #10 TW wire (10-2 w/g) in a 1" conduit from the well to the Well Control Panel.
4. Install the new Well Control Panel (B/W level control).
5. Install a 1" conduit from the Well Control Panel and the Booster Start panel to the new 20,000 gallon storage tank and install 3 #12-2 wire for float control.
6. Extend the solenoid control wires from the Controller to the manifold stations.
7. Connect the new booster pump to the Pump Start Panel.
8. Loss of discharge pressure (line break) will shut off the booster pump.

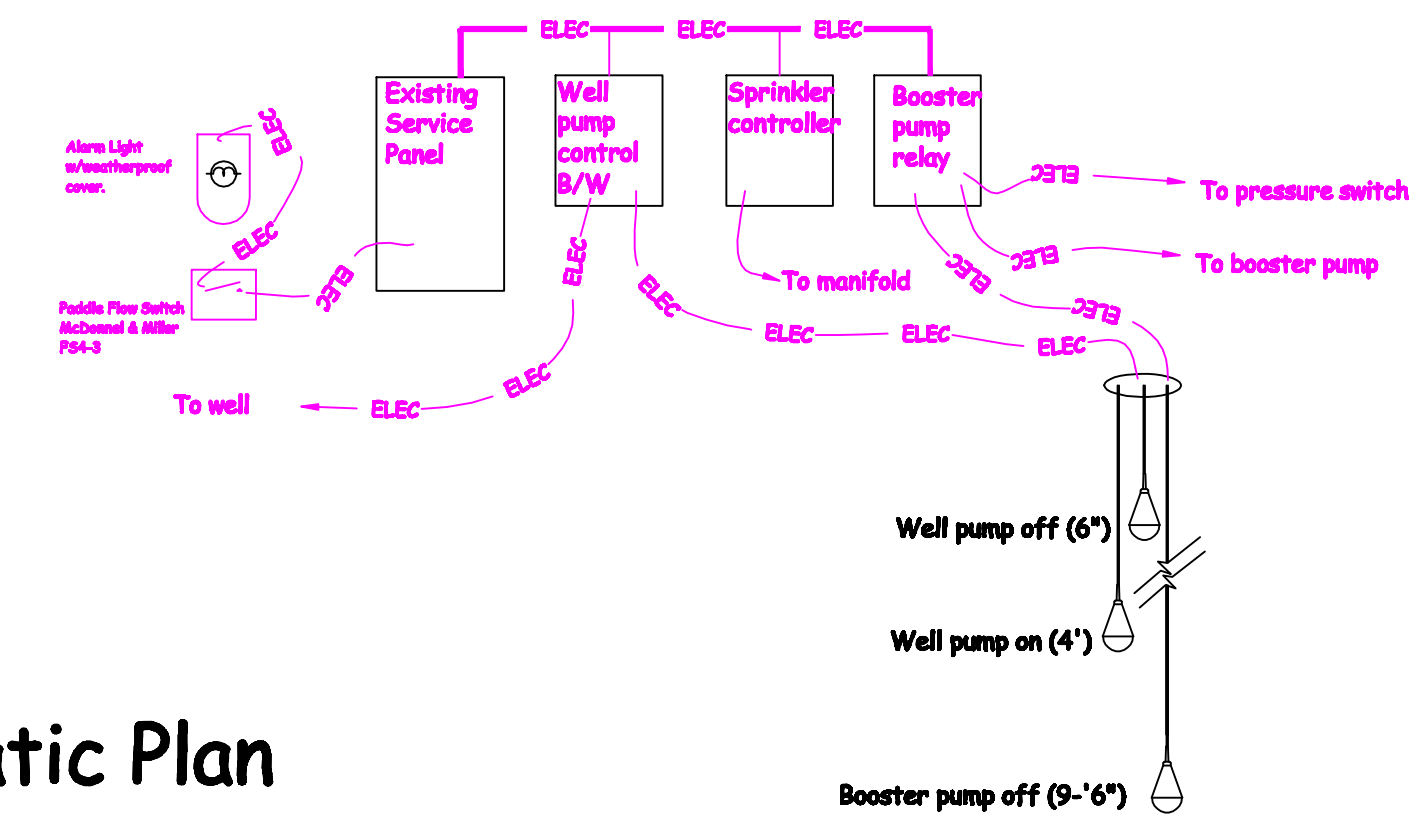

Electrical Schematic Plan

Camp Floyd / Stagecoach Inn State Park and Museum
18035 West 1540 North
Fairfield , UT 84013 (801) 768-8932

CAMP FLOYD STAGECOACH INN
SPRINKLER SYSTEM

11 x 17
Job Numbe
2006-XX
Date
OCT. '06
Sheet Number
S-2

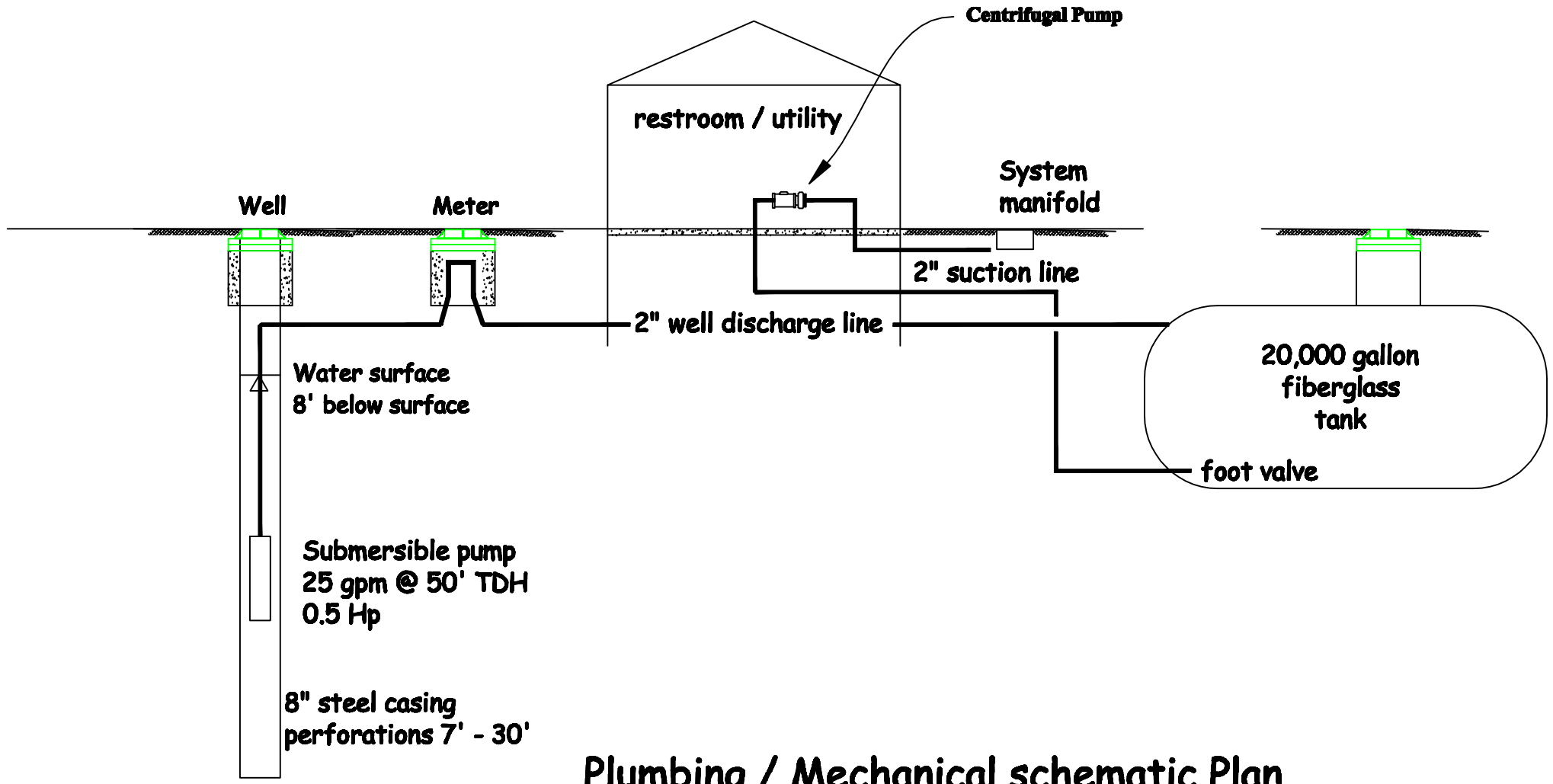

Plumbing / Mechanical schematic Plan

Plumbing and Mechanical notes

1. The submersible pump design is
   - 1.1. 25 gpm @ 50 TDH
   - 1.2. 120 volt single phase
   - 1.3. 1 ¼" outlet
   - 1.4. ½ Hp motor
   - 1.5. 1 ¼" galv. support pipe, 12' long connect to the well seal plate as shown.
2. The pump discharge line will increase from 1 ¼" to 2" PVC Class 200
3. The well head and access cover / riser will be constructed as shown.
4. The pump suction line will be 2" PVC Class 200.
5. The booster pump design is
   - 5.1. 38 gpm @ 120 TDH
   - 5.2. 2.5 Hp
   - 5.3. 230 volt single phase
6.

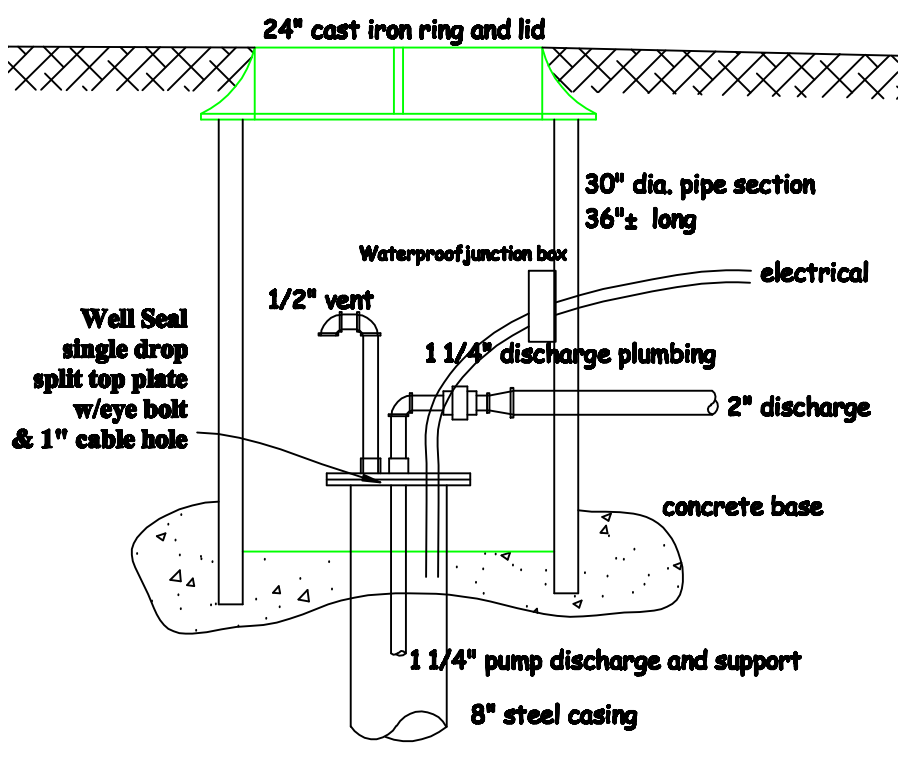

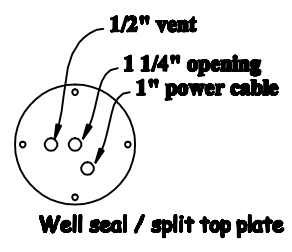

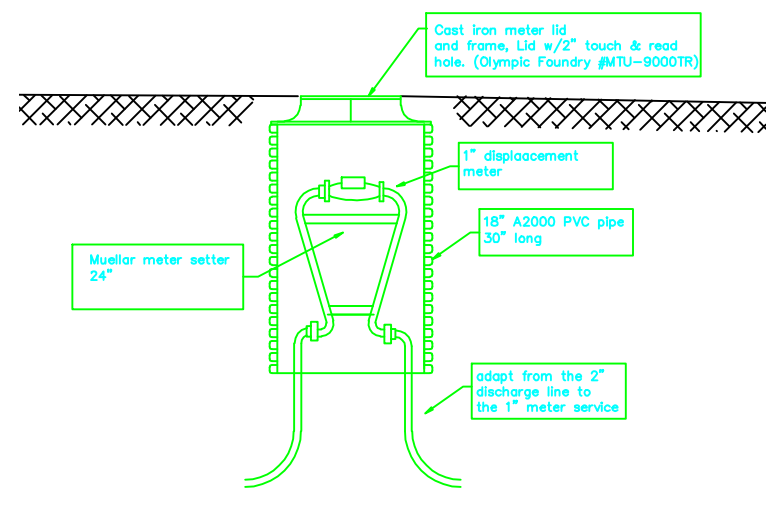

Camp Floyd / Stagecoach Inn State Park and Museum
18035 West 1540 North
Fairfield , UT 84013 (801) 768-8932

CAMP FLOYD STAGECOACH INN
SPRINKLER SYSTEM

11 x 17
Job Numbe
2006-XX
Date
OCT. '06
Sheet Number
S-3

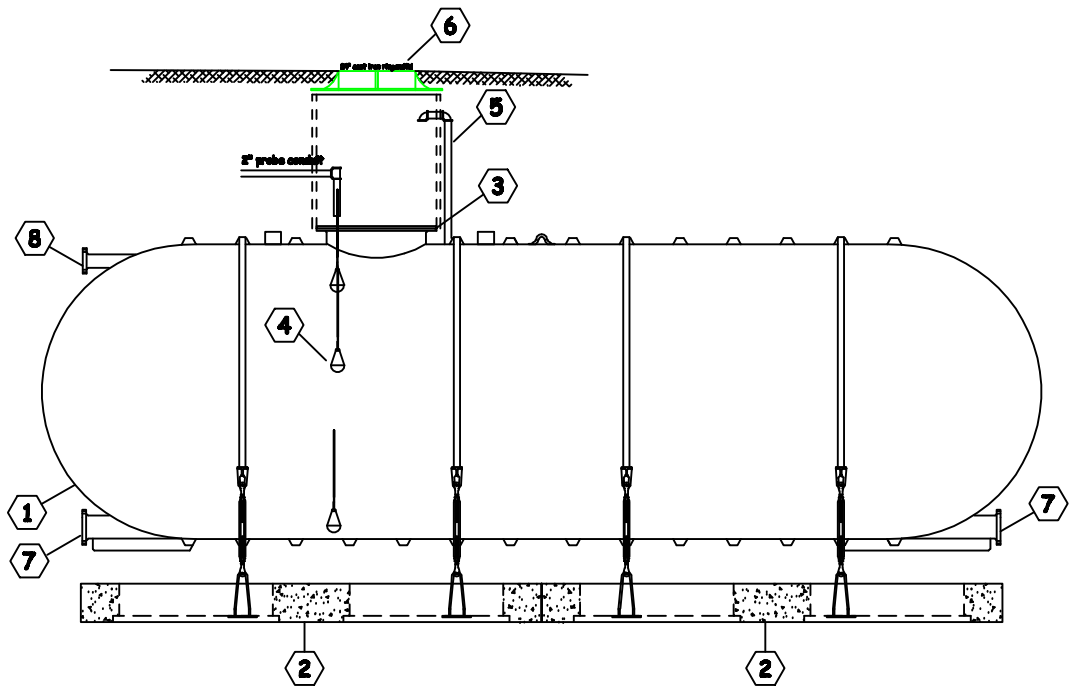

NO.	Item and Description
1.	20,000 gallon XERXES single wall FRP tank - 10' dia. X 37'-8 3/4"
2.	XERXES precast deadman system w/hold down straps and turnbuckle.
3.	30" manway access w/hinged and locking cover
4.	Pump control floats
5.	2" vent assembly, vented to the manway
6.	36" dia. access manhole, 30" high (concrete or PVC)
7.	4" full bottom nozzle with blind flange and 2" threaded adpt. (suction)
8.	4" tangential nozzle with blind flange and 2" threaded adpt. (inlet)

TANK DETAIL

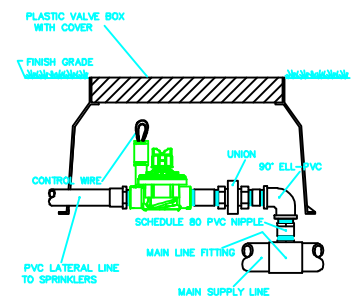

Toro P-220 series valve

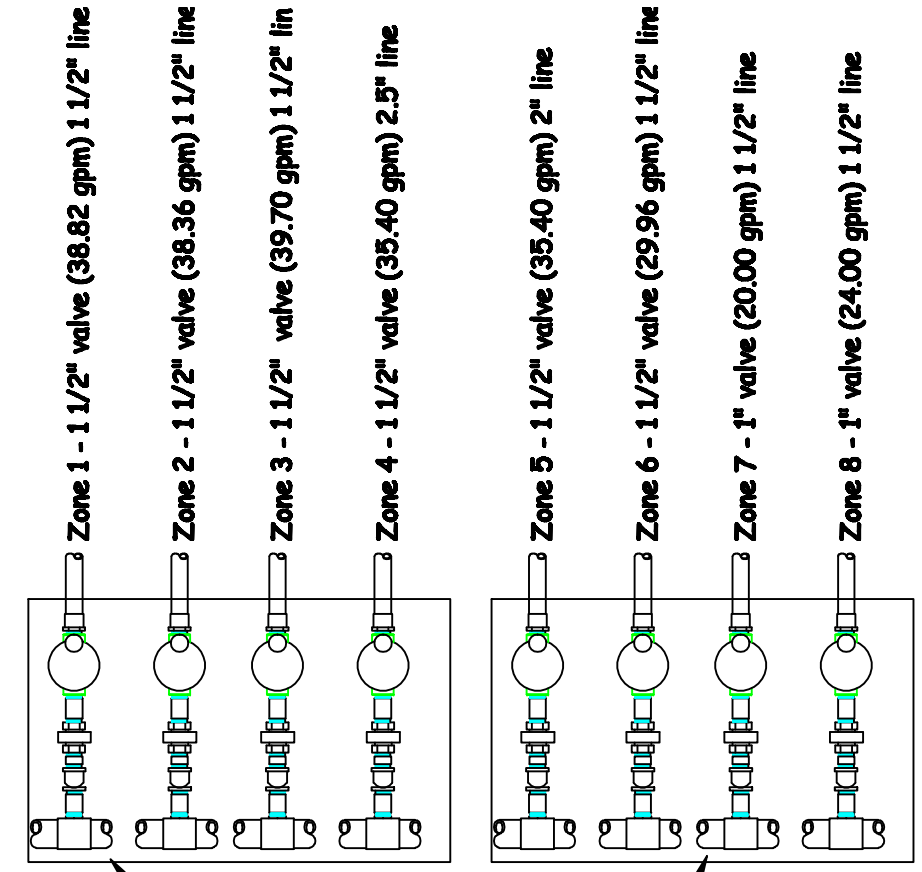

MANIFOLD DETAIL

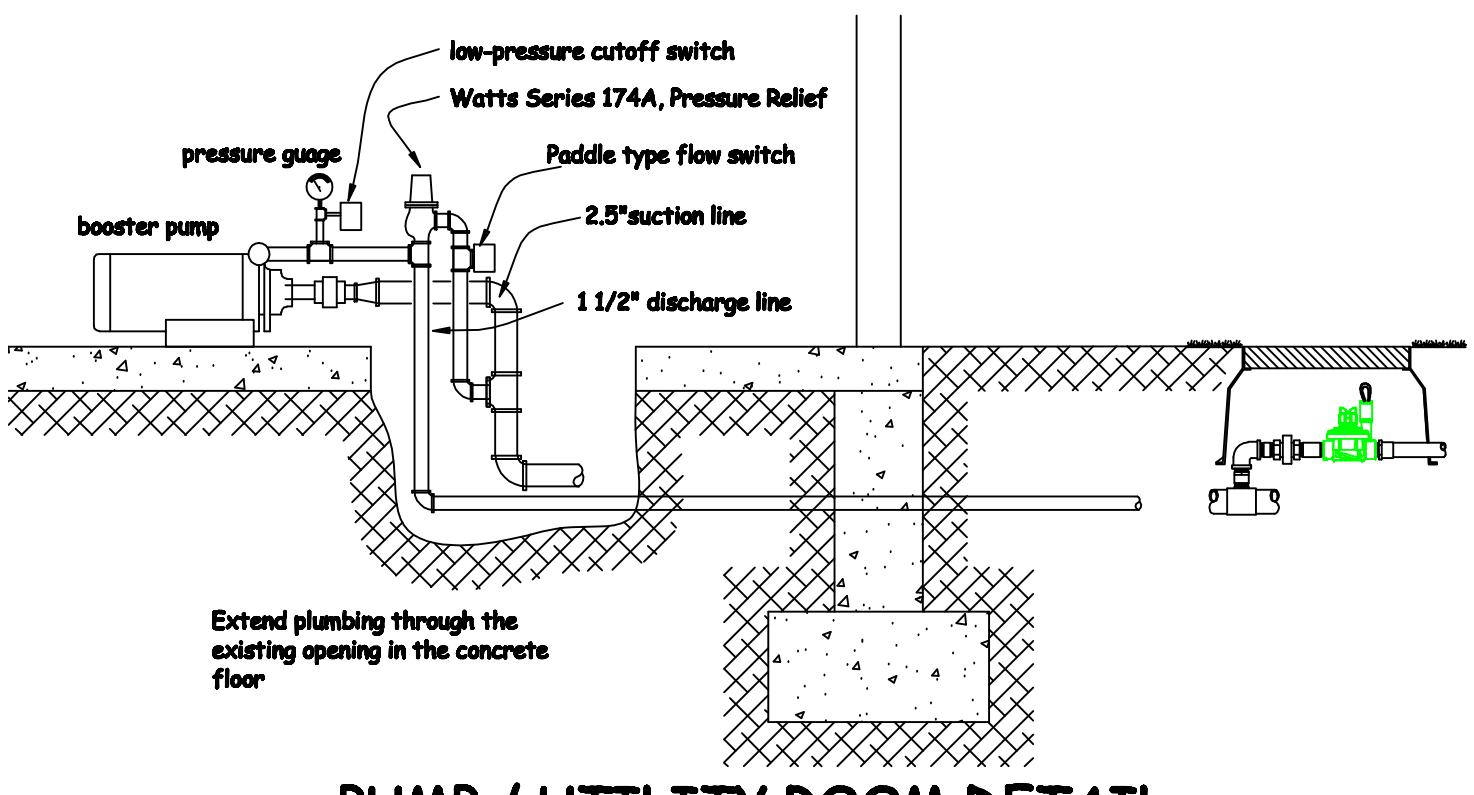

PUMP / UTILITY ROOM DETAIL

Suggested zone timing for a weekly precipitation rate of 1.75"										
Zone	Average precip. application rate per zone	gpm per zone	Day 1	Day 2	Day 3	Day 4	Day 5	Day 6	Day 7	Total precip.
1	1.82	38.82	30				30			1.82
2	1.84	38.36		30				30		1.84
3	1.82	39.70			30				30	1.82
4	0.27	35.40	200				200			1.80
5	0.27	35.40		200				200		1.80
6	1.84	29.96			30				30	1.84
7	0.23	20.00	240				240			1.84
8	0.23	24.00		240				240		1.84
		Total gallons per day	13045	13991	2090		13045	13991	2090	

CONTROLLER SETTINGS

Camp Floyd / Stagecoach Inn State Park and Museum
18035 West 1540 North
Fairfield , UT 84013 (801) 768-8932

CAMP FLOYD STAGECOACH INN
SPRINKLER SYSTEM

11 x 17
Job Numbe
2006-XX
Date
OCT. '06
Sheet Number
S-4

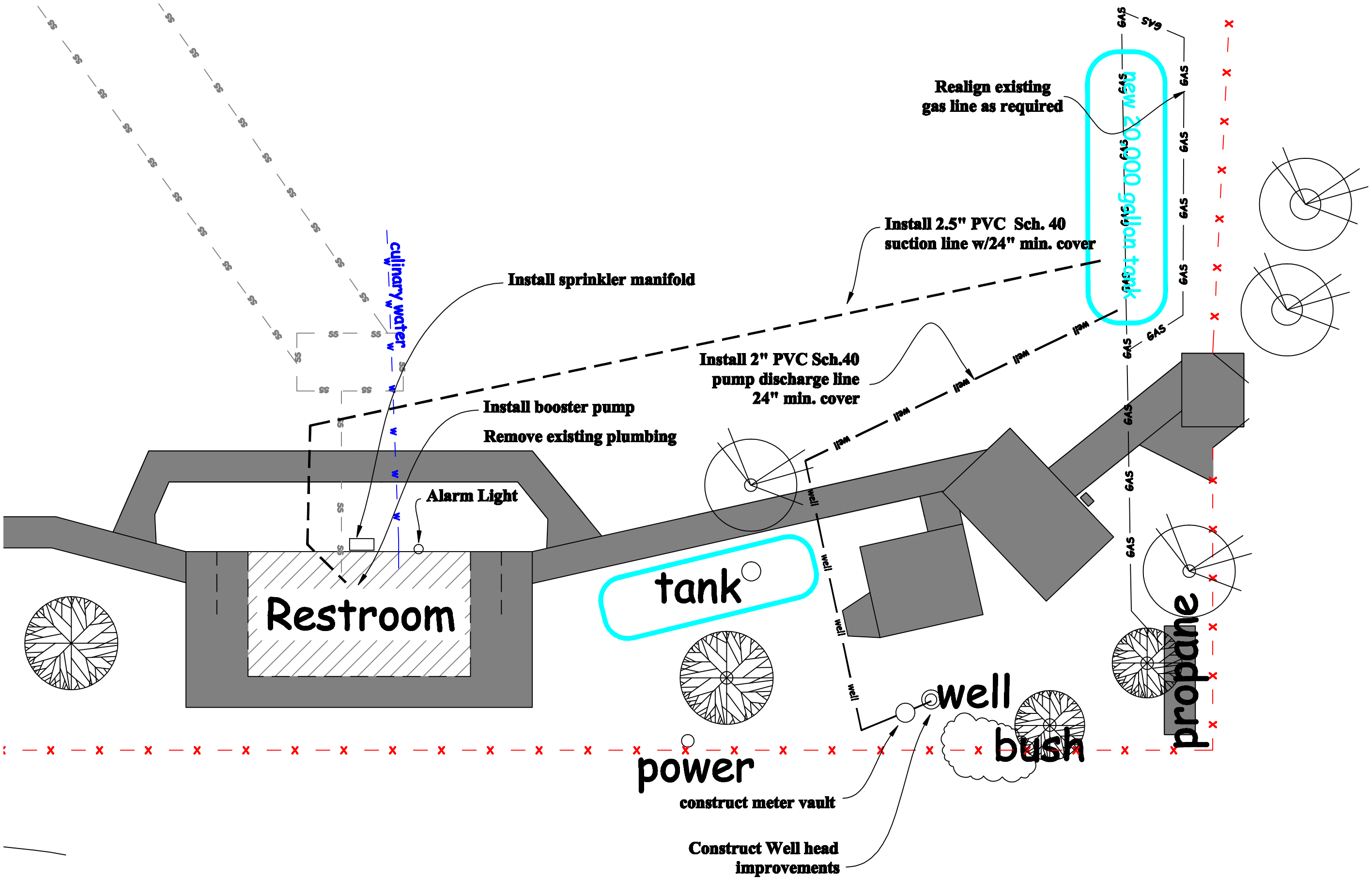

PUMP LINE CONFIGURATION

Camp Floyd / Stagecoach Inn State Park and Museum
18035 West 1540 North
Fairfield , UT 84013 (801) 768-8932

CAMP FLOYD STAGECOACH INN
SPRINKLER SYSTEM

11 x 17
Job Numbe
2006-XX
Date
OCT. '06
Sheet Number
S-5

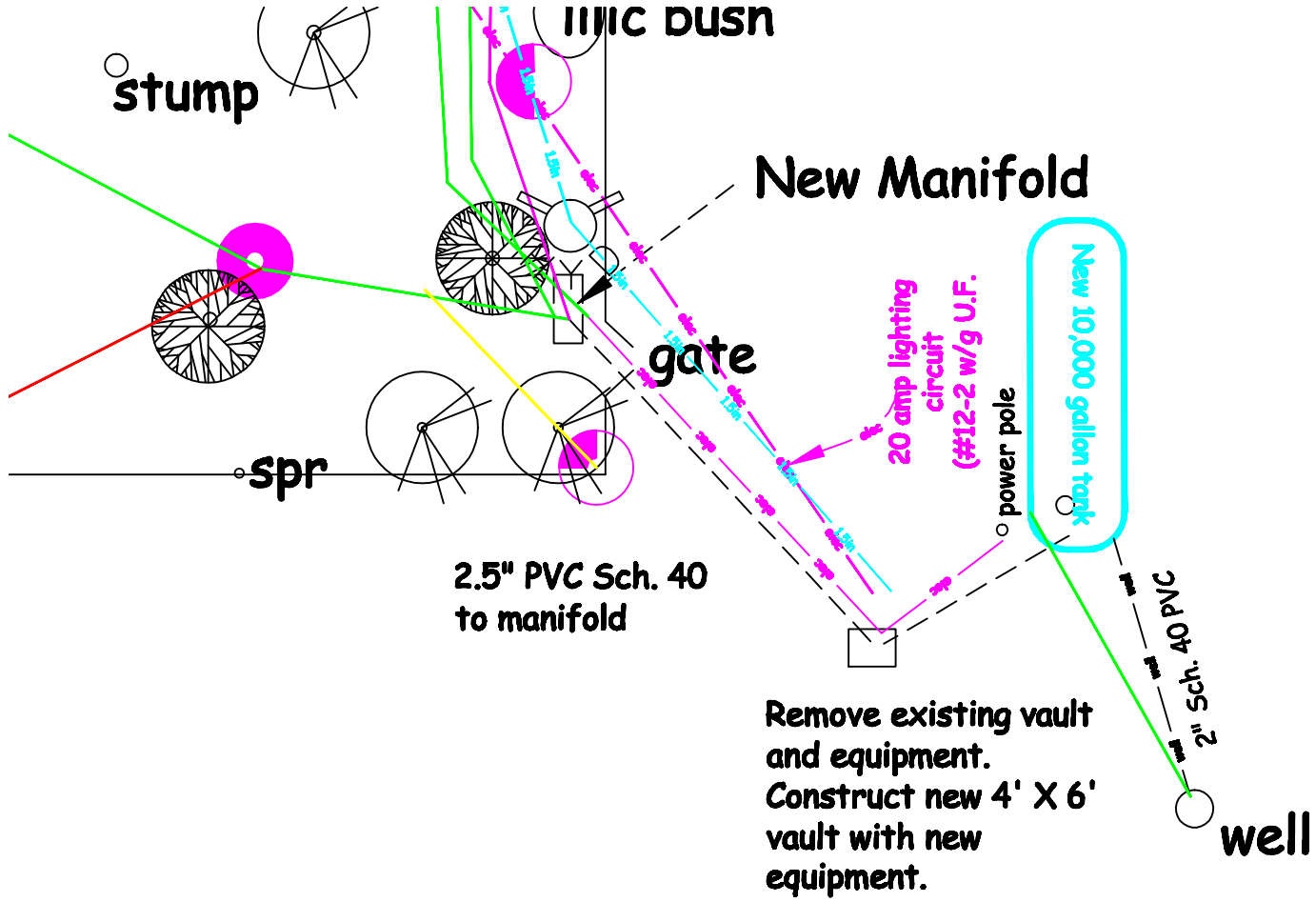

NO. 903 CORN KING YARD HYDRANT

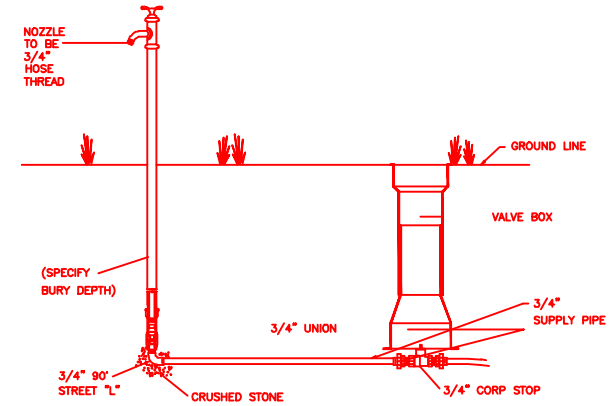

YARD HYDRANTS SHALL BE CORN KING #903 YARD HYDRANTS AS MANUFACTURED BY JOHN C. KUPFERLE FOUNDRY CO., ST. LOUIS, MO.

YARD HYDRANTS SHALL BE SELF-DRAINING, NON-FREEZING, COMPRESSION TYPE. INLET CONNECTION SHALL BE 3/4" IP. OUTLET SHALL BE 3/4" GHT.

PRINCIPAL INTERIOR OPERATING PARTS SHALL BE BRASS AND REMOVABLE FROM YARD HYDRANT FOR SERVICING WITHOUT EXCAVATION.

YARD HYDRANTS SHALL BE SET IN 4 CUBIC FEET OF CRUSHED STONE TO ALLOW FOR PROPER DRAINAGE. RECOMMENDATIONS OF THE AWWA SHOULD BE FOLLOWED WHEN INSTALLING THE YARD HYDRANT.

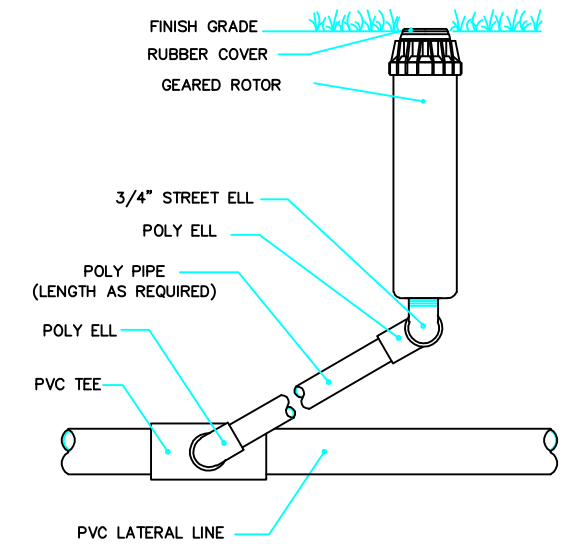

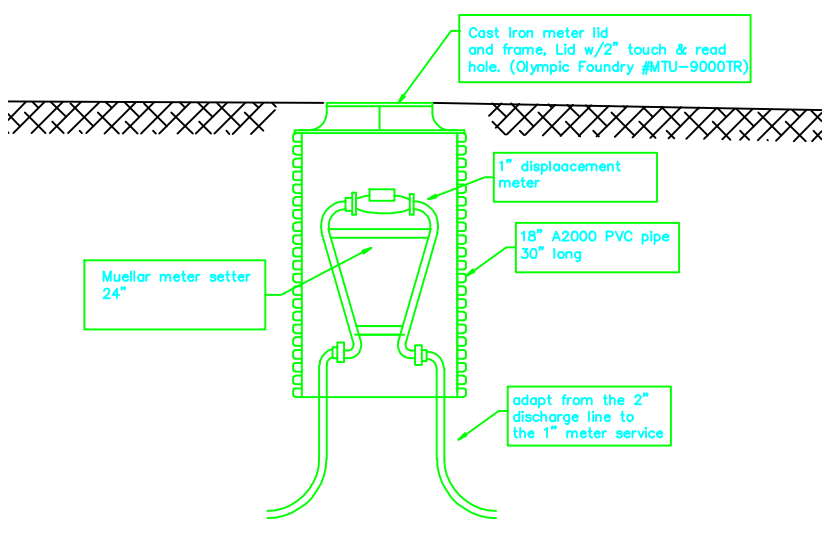

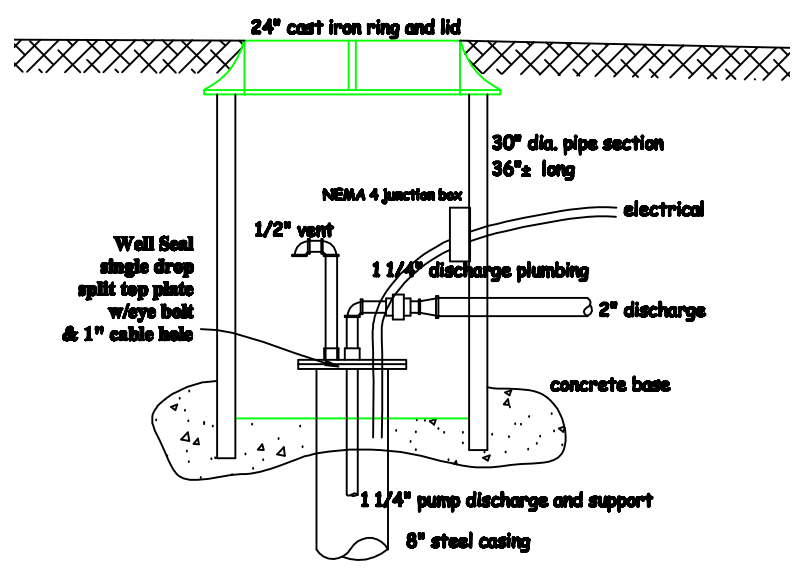

Suggested zone timing for a weekly precipitation rate of 1.75"										
Zone	Average precip. application rate per zone	gpm per zone	Day 1	Day 2	Day 3	Day 4	Day 5	Day 6	Day 7	Total Precip.
1	0.27	45.5	150			150			150	2.03
2	0.27	45.5	150			150			150	2.03
3	0.27	45.5		150			150	150		2.03
4	0.27	54.6		150			150	150		2.03
		Total Gallons per day	13650	15012		13650	15015	15015	13650	

Camp Floyd / Stagecoach Inn State Park and Museum
18035 West 1540 North
Fairfield , UT 84013 (801) 768-8932

CAMP FLOYD CEMETERY
SPRINKLER SYSTEM

11 x 17
Job Numbe
2006-XX
Date
OCT. '06
Sheet Number
S-10

All main line pipe shall be new Schedule 40 PVC pipe with schedule 40 PVC fittings on all tees, elbows and 90° bends. All secondary lateral line pipe shall be Schedule 40 PVC pipe. Fittins on all secondary lateral lines shall be Schedule 40 fittings.

Main lines shall be installed a minimum of 24" below finish grade. Backfill trench around main with a minimum of 8" of sand. Lateral lines shall be placed a minimum of 12" below finish grade.

All main lines shall slope to drain. If field conditions necessitate additional drains, these drains shall be installed as needed fjor complete drainage of the entire system. Provide a 24" diamenter X 24" deep gravel sump below grade at each drain. All manual drain valves shall be installed as detailed on the drawings. Install geotextile fabric around each gravel drain.

The main lines shall be pressure tested at 150 PSI for 2hours with no loss of pressure.

The drawing is diagrammatic only and is intended to convey the idea of full coverage of the irrigation sprinkler system. The irrigation system contractor shall be responsible for the installation layout of the system in accordance with the drawings to proportionally cover the area as shown. The layout mae be modified if necessary to obtain coverage and all necessary adjustments made to provide full and proper coverage prior to acceptance by the Owner.

The system is designed for pressures as indicated on each zone description.

All valves to be wired to controllers using #14 U.F. wire and pen-tite water resistant wire connectors. Run one extra wire from the adjacent controller to each group of valves for future use and stub into the valve box.

All valve boxes shall be jumbo size plastic boxes, Ametec or equal.

All valves will be located on the east side of the Restroom facility in a location that has reasonable access to the electrical power, pump line and circuit lines. The final location shall be approved by the Owner.

A maximum of four valves shall be installed in each valve manifold box. All mainline manifold tees shall have a minimum 1½" outlet.

All heads shall be place perpendicular to the finish grade so as to provide for proper coverage.

All heads adjacent to the buildings shall be installed a minimum of 12" away from the building face.

All gear drive rotor heads shall be enclosed in a one cubic foot gravel sump of ¾" inch or smaller aggregate.

The systems shall be operated from either an existing RainBird controller or the new Toro Controller as indicated on the drawings. The Contractor shall assure proper programming of each controller and advise and demonstrate the operation of each to the Owner.

Approximate Materials List (contractor shall be responsible to verify quantities)

	Stagecoach Inn	Cemetery
Toro Super 700 Series (4.5 nozzle)	16 each	42 each
Toro Mini 8 2.0 nozzle	22 each	
Toro 570Z - 4P 15' popup (full spray)	5 each	
Toro 570Z - 4P 15' popup (270° spray)	6 each	
Toro 570Z - 4P 15' popup (half spray)	13 each	
Toro 570Z - 4P 15' popup (90° spray)	8 each	
Toro 570Z - 4P 8' popup (full spray)	0 each	
Toro 570Z - 4P 8' popup (270° spray)	4 each	
Toro 570Z - 4P 8' popup (half spray)	23 each	
Toro 570Z - 4P 8' popup (90° spray)	3 each	
Toro P-220 series valve, 1½"	6 each	4 each
Toro P-220 series valve, 1"	1 each	
Toro TMC-212 controller		1 each
100 Amp service panel (12 ckt)		1 each
Well Pump Control (B/W)		1 each
Booster Pump relay		1 each
2.5" PVC pipe	90 l.f.	310 l.f.
2" PVC pipe	325 l.f.	580 l.f.
1.5" PVC pipe	1540 l.f.	890 l.f. + 525l.f.
1" PVC pipe	1122 l.f.	410 l.f.
Yard hydrant		3 each

NOTE - Tees, 90° bends, caps, bushings, and other fittings were not determined.

Electrical conduit. 1"	85 l.f.	290 l.f.
Electrical conduit, 1.5"	70 l.f.	
Booster pump - 38 gpm @ 120 tdh	1 each	Stagecoach inn
Booster pump - 55 gpm @ 125 tdh	1 each	Cemetery
Submersible pump - 20 gpm @ 22 tdh	1 each	Stagecoach inn
Submersible pump - 20 gpm @ 48 tdh	1 each	Cemetery
Surface plate / Well seal	2 locations	

20,000 gallon fiberglas reinforced plastic storage tank with anchor concrte, tie down straps, access manways and associated items.

10,000 gallon fiberglas reinforced plastic storage tank with anchor concrte, tie down straps, access manways and associated items.

48" X 72" X 48" concrete precast vault w/48" X 72" doubleaf access hatch

Low pressure switches	2 locations
Flow meter assembly	2 locations

Additional notes as provided by the Owner.

Camp Floyd / Stagecoach Inn State Park and Museum
18035 West 1540 North
Fairfield , UT 84013 (801) 768-8932

CAMP FLOYD CEMETERY
SPRINKLER SYSTEM

11 x 17
Job Numbe
2006-XX
Date
OCT. '06
Sheet Number
S-11

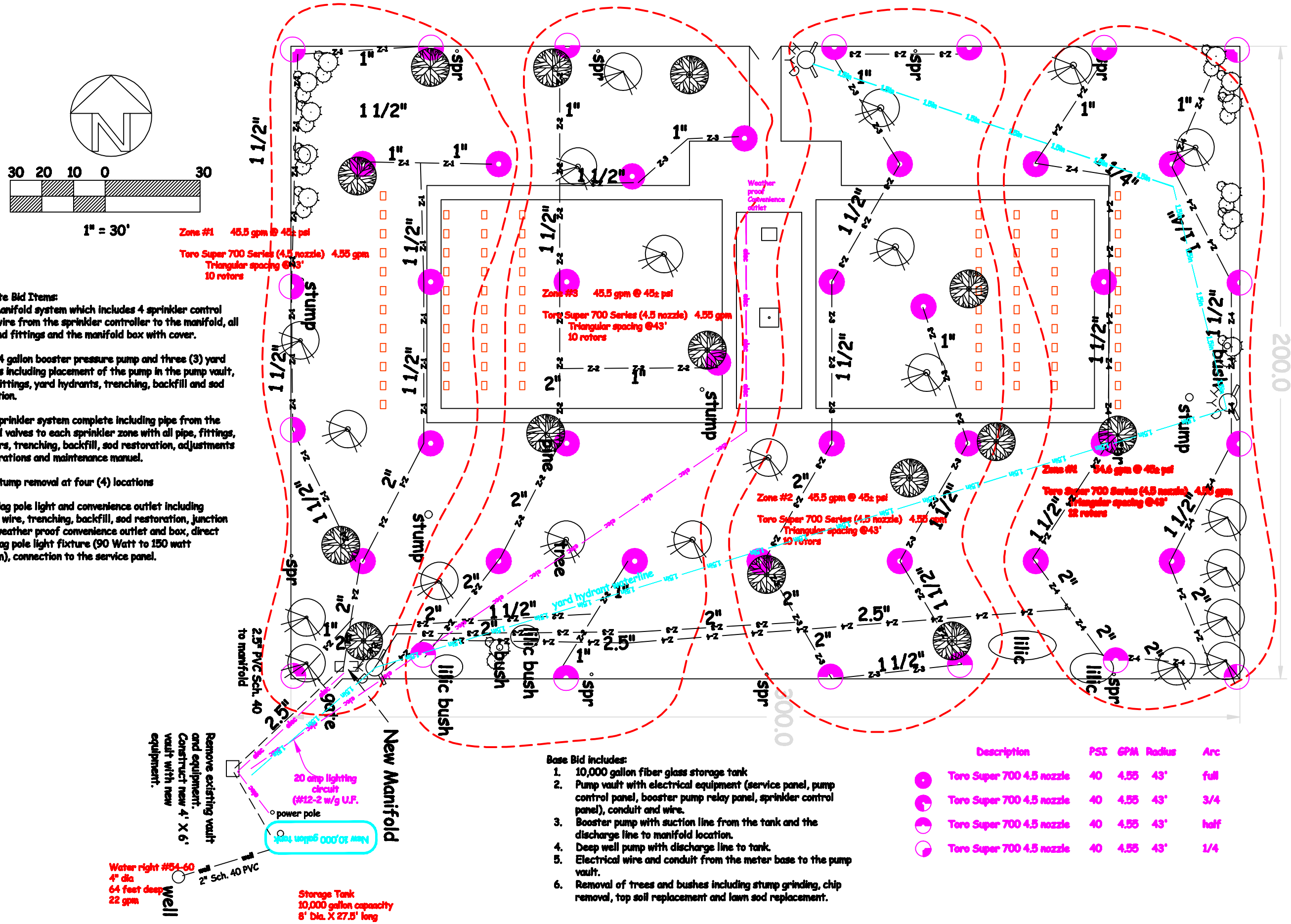

Alternate Bid Items:

#1 Manifold system which includes 4 sprinkler control valves, wire from the sprinkler controller to the manifold, all piping and fittings and the manifold box with cover.

#2 44 gallon booster pressure pump and three (3) yard hydrants including placement of the pump in the pump vault, piping, fittings, yard hydrants, trenching, backfill and sod restoration.

#3 Sprinkler system complete including pipe from the manifold valves to each sprinkler zone with all pipe, fittings, sprinklers, trenching, backfill, sod restoration, adjustments and operations and maintenance manuel.

#4 Stump removal at four (4) locations

#5 Flag pole light and convenience outlet including conduit, wire, trenching, backfill, sod restoration, junction boxes, weather proof convenience outlet and box, direct burial flag pole light fixture (90 Watt to 150 watt maximum), connection to the service panel.

Base Bid includes:

1. 10,000 gallon fiber glass storage tank
2. Pump vault with electrical equipment (service panel, pump control panel, booster pump relay panel, sprinkler control panel), conduit and wire.
3. Booster pump with suction line from the tank and the discharge line to manifold location.
4. Deep well pump with discharge line to tank.
5. Electrical wire and conduit from the meter base to the pump vault.
6. Removal of trees and bushes including stump grinding, chip removal, top soil replacement and lawn sod replacement.

Description	PSI	GPM	Radius	Arc
Toro Super 700 4.5 nozzle	40	4.55	43'	full
Toro Super 700 4.5 nozzle	40	4.55	43'	3/4
Toro Super 700 4.5 nozzle	40	4.55	43'	half
Toro Super 700 4.5 nozzle	40	4.55	43'	1/4

Sprinkler System Layout

Camp Floyd / Stagecoach Inn State Park and Museum
18035 West 1540 North
Fairfield , UT 84013 (801) 768-8932

CAMP FLOYD CEMETERY
SPRINKLER SYSTEM

11 x 17
Job Numbe
2006-XX
Date
OCT. '06
Sheet Number
S-6

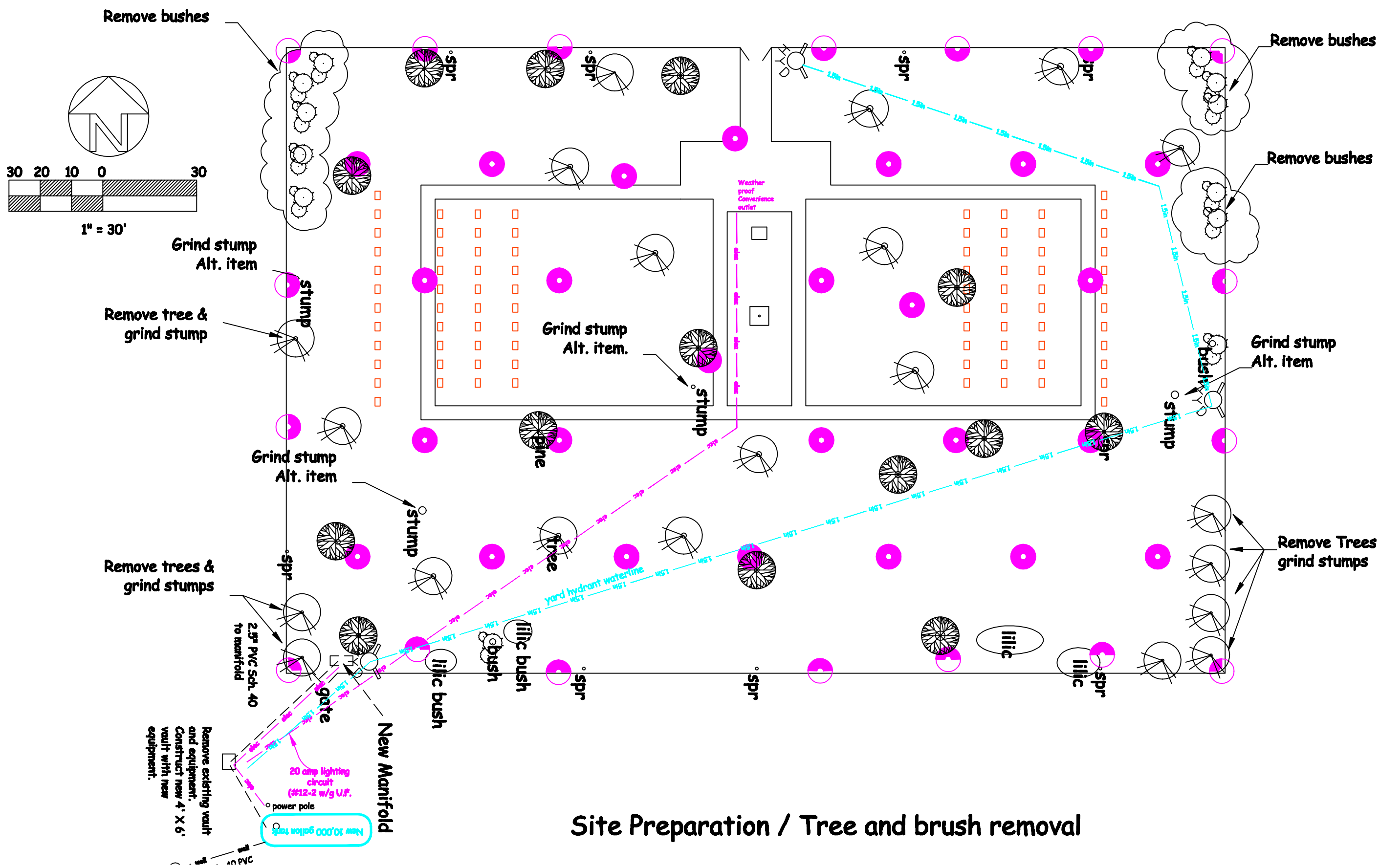

Site Preparation / Tree and brush removal

Camp Floyd / Stagecoach Inn State Park and Museum
18035 West 1540 North
Fairfield , UT 84013 (801) 768-8932

CAMP FLOYD CEMETERY
SPRINKLER SYSTEM

11 x 17	
Job Numbe	2006-XX
Date	OCT. '06
Sheet Number	S-7

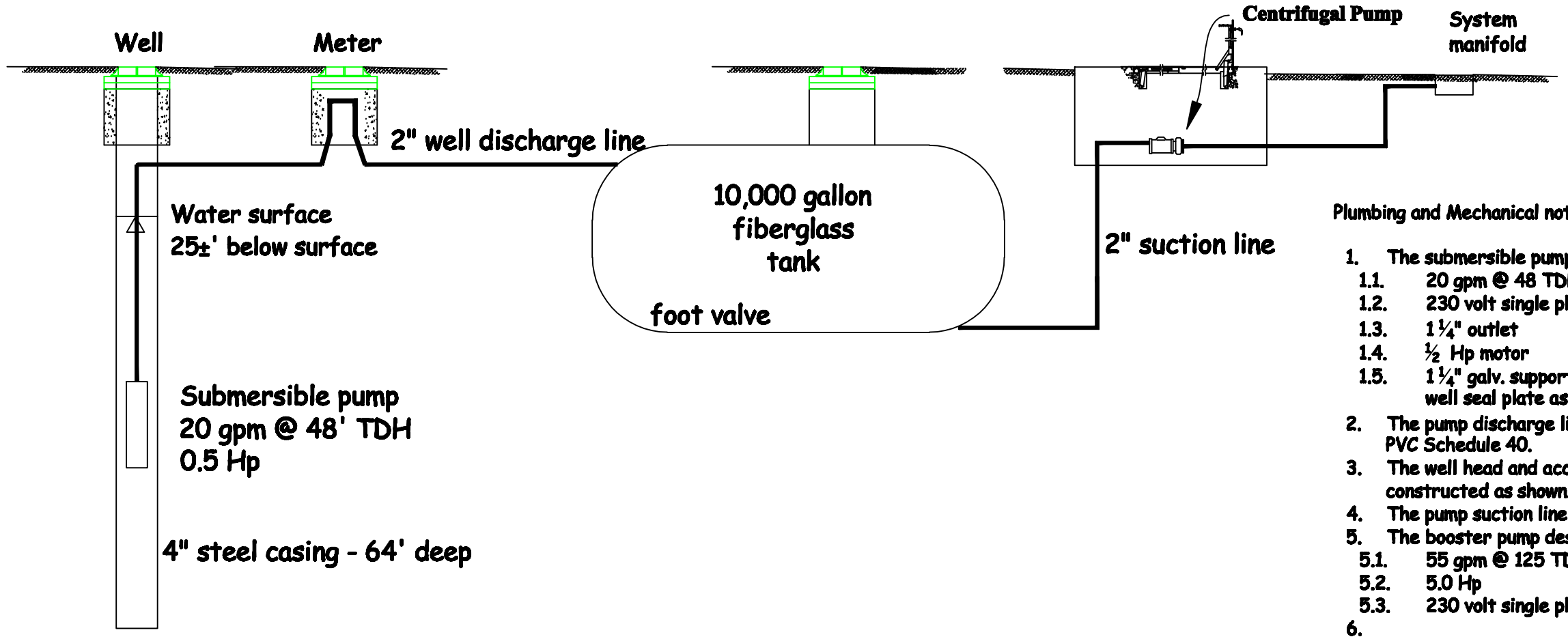

Plumbing and Mechanical notes

1. The submersible pump design is
   - 1.1. 20 gpm @ 48 TDH
   - 1.2. 230 volt single phase
   - 1.3. 1 ¼" outlet
   - 1.4. ½ Hp motor
   - 1.5. 1 ¼" galv. support pipe, 32' long connect to the well seal plate as shown.
2. The pump discharge line will increase from 1 ¼" to 2" PVC Schedule 40.
3. The well head and access cover / riser will be constructed as shown.
4. The pump suction line will be 2.5" PVC Schedule 40.
5. The booster pump design is
   - 5.1. 55 gpm @ 125 TDH
   - 5.2. 5.0 Hp
   - 5.3. 230 volt single phase
6.

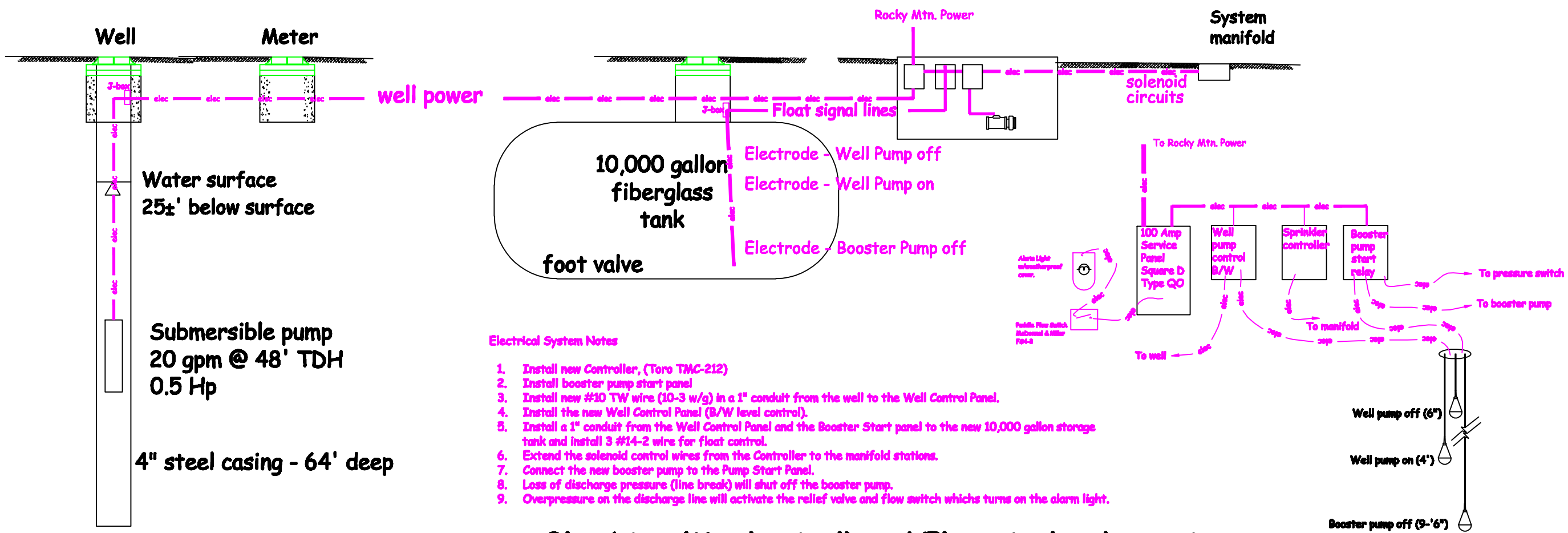

Electrical System Notes

1. Install new Controller, (Toro TMC-212)
2. Install booster pump start panel
3. Install new #10 TW wire (10-3 w/g) in a 1" conduit from the well to the Well Control Panel.
4. Install the new Well Control Panel (B/W level control).
5. Install a 1" conduit from the Well Control Panel and the Booster Start panel to the new 10,000 gallon storage tank and install 3 #14-2 wire for float control.
6. Extend the solenoid control wires from the Controller to the manifold stations.
7. Connect the new booster pump to the Pump Start Panel.
8. Loss of discharge pressure (line break) will shut off the booster pump.
9. Overpressure on the discharge line will activate the relief valve and flow switch whichs turns on the alarm light.

Plumbing (Mechanical) and Electrical Schematic

Camp Floyd / Stagecoach Inn State Park and Museum
18035 West 1540 North
Fairfield , UT 84013 (801) 768-8932

CAMP FLOYD CEMETERY
SPRINKLER SYSTEM

11 x 17
Job Numbe
2006-XX
Date
OCT. '06
Sheet Number
S-8

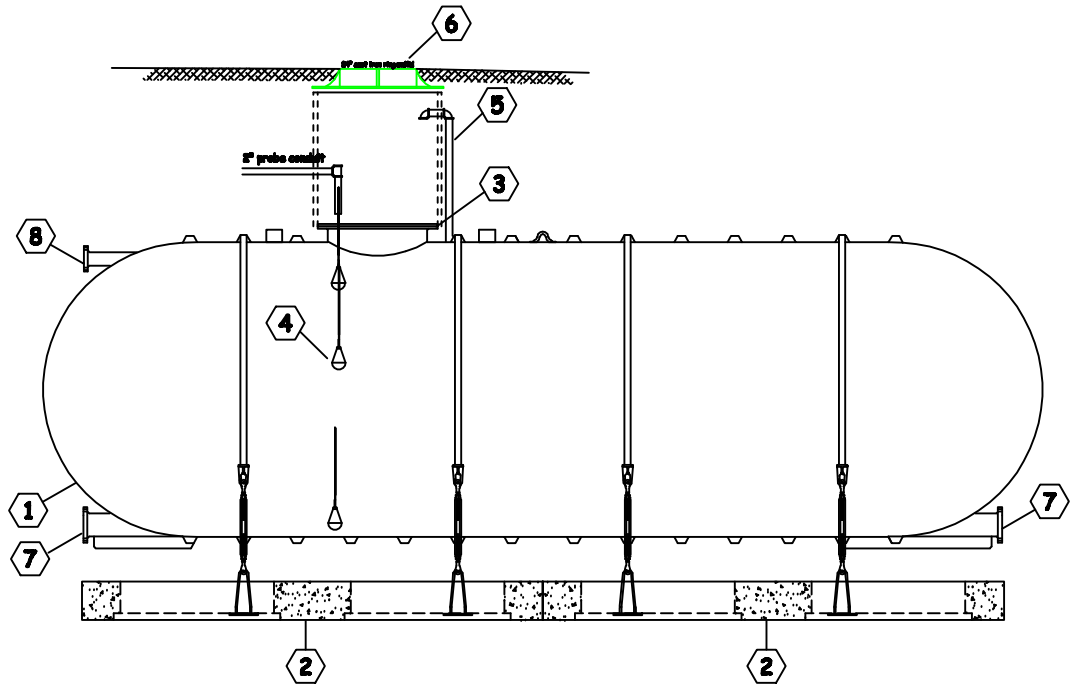

NO.	Item and Description
1.	10,000 gallon XERXES single wall FRP tank - 8' dia. X 32'-6 1/2"
2.	XERXES precast deadman system w/hold down straps and turnbuckle.
3.	30" manway access w/hinged and locking cover
4.	Pump control electrodes
5.	2" vent assembly, vented to the manway
6.	36" dia. access manhole, 30" high (concrete or PVC)
7.	4" full bottom nozzle with blind flange and 2" threaded adpt. (suction)
8.	4" tangential nozzle with blind flange and 2" threaded adpt. (inlet)

Tank detail and notes

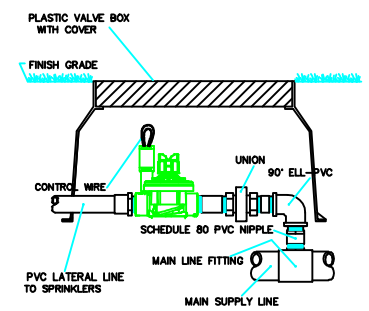

Toro P-220 series valve

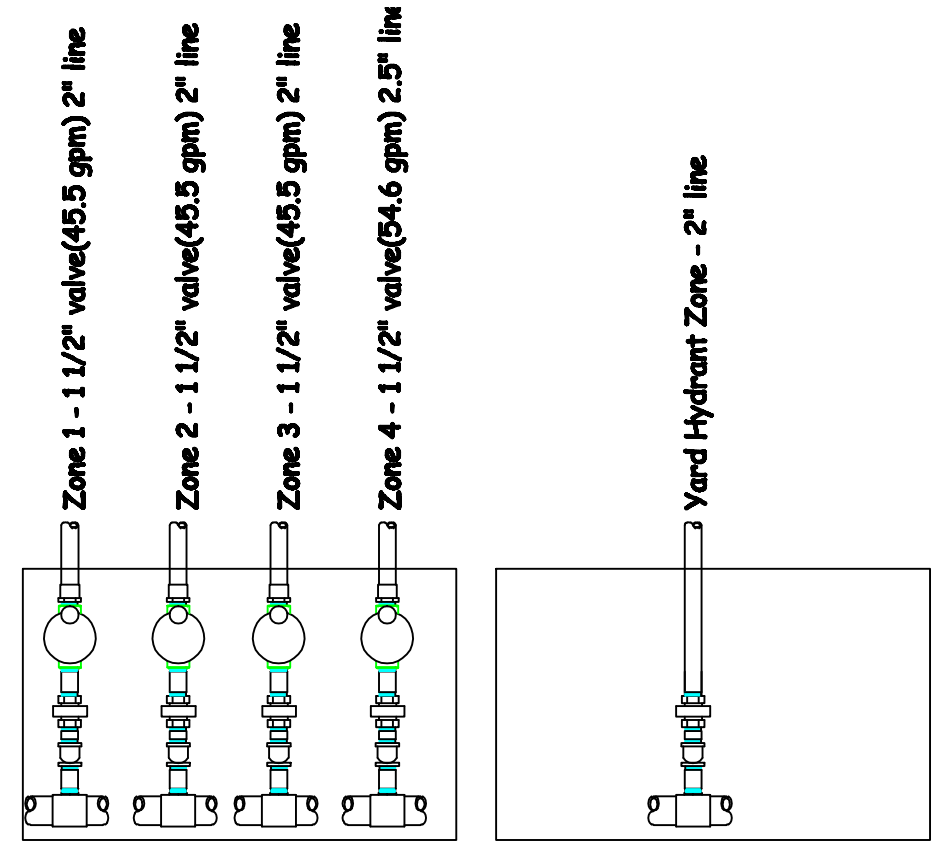

Manifold design

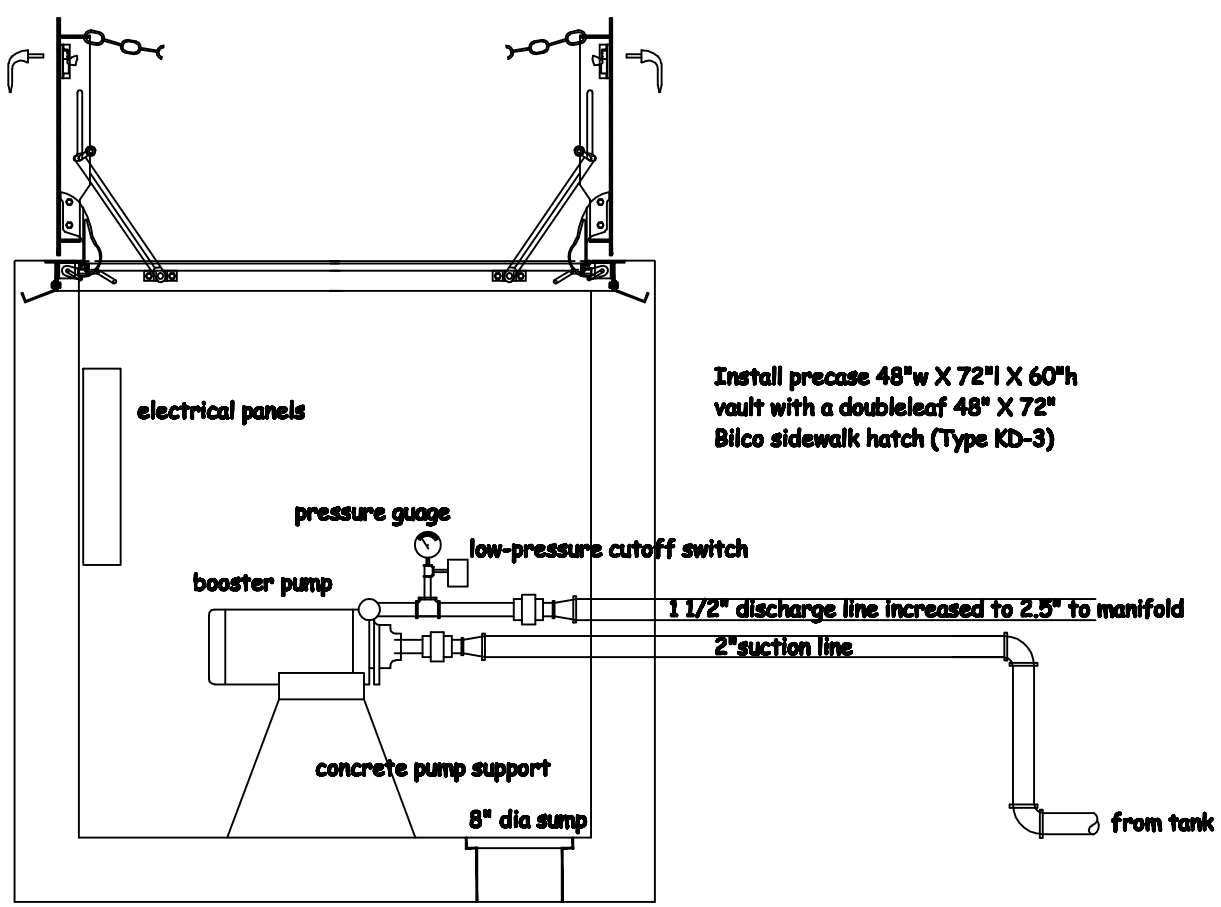

Booster pump vault (double leaf access)

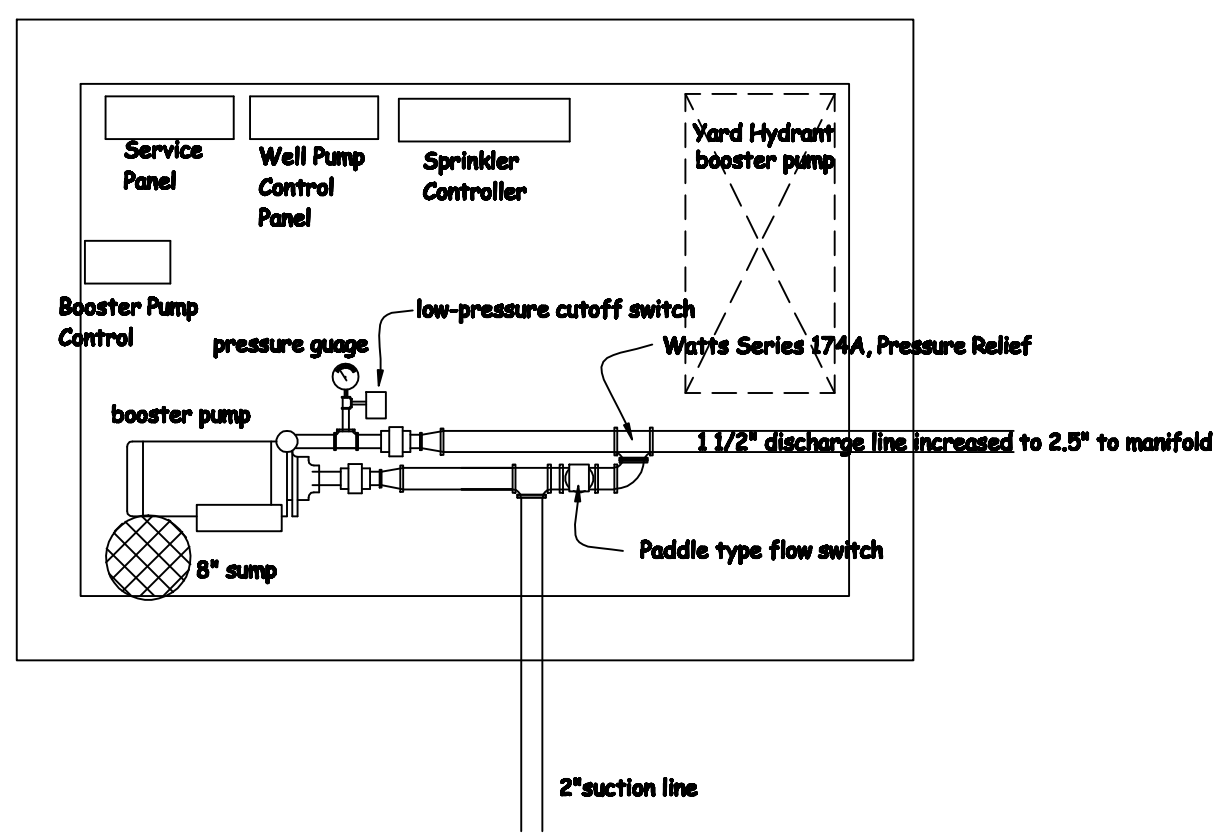

Booster pump vault - plan view

Camp Floyd / Stagecoach Inn State Park and Museum
18035 West 1540 North
Fairfield , UT 84013 (801) 768-8932

CAMP FLOYD CEMETERY
SPRINKLER SYSTEM

11 x 17
Job Numbe
2006-XX
Date
OCT. '06
Sheet Number
S-9