C:\EGPT\Yuba Oasis\Yuba Oasis Title Sheet.dwg, 4/30/2007 8:38:18 AM, LMS

STATE OF UTAH
DIVISION OF FACILITIES CONSTRUCTION AND MANAGEMENT

PROJECT NO.	SHEET NO.
06099510	1

ISSUE DATE 4-27-2007

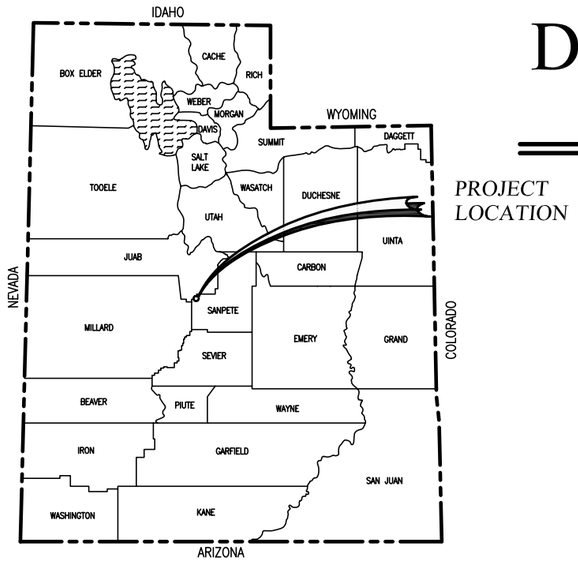

YUBA STATE PARK
PAVING IMPROVEMENTS
DFCM PROJECT NO. 06099510
2007

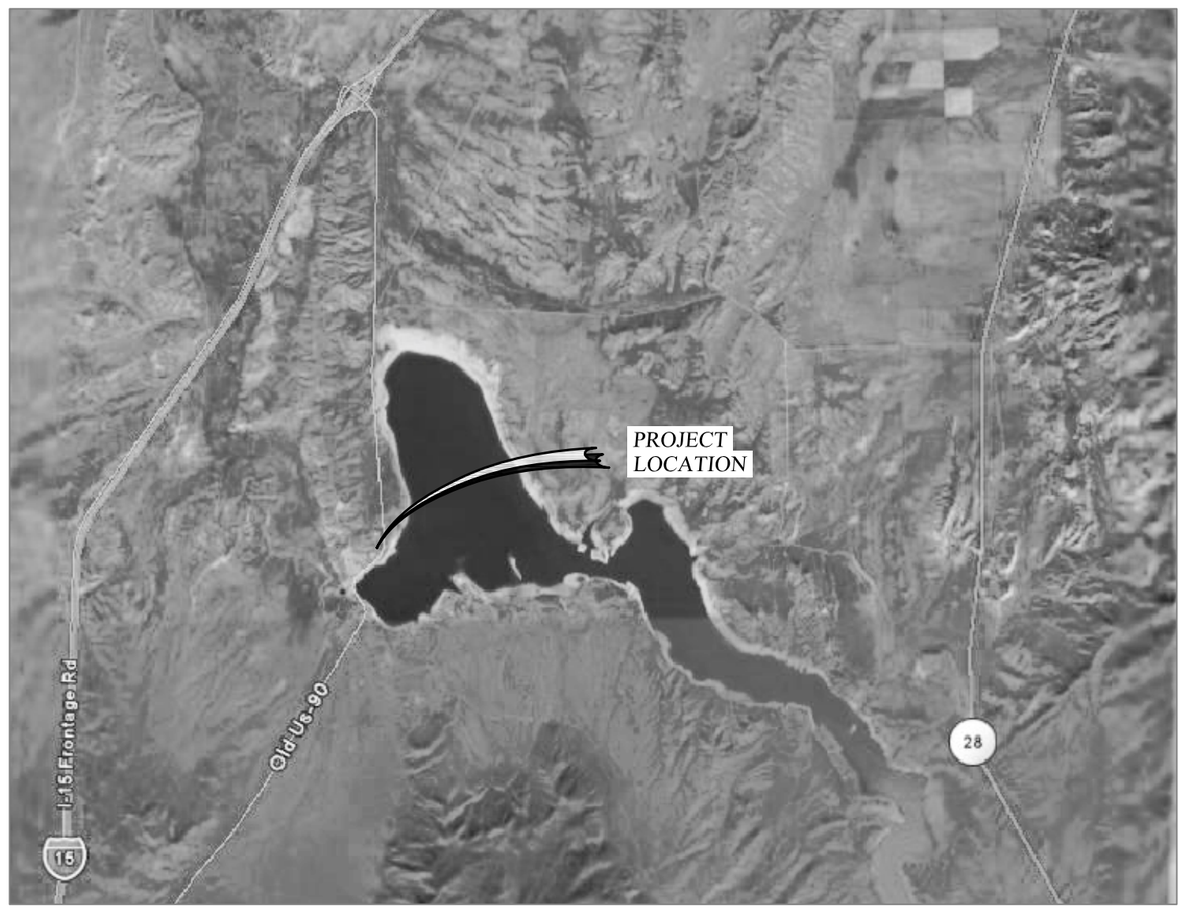

N

RECOMMENDED FOR APPROVAL:

PROFESSIONAL ENGINEER No. 146602 CRAIG E. JOHANSEN STATE OF UTAH

PROJECT ENGINEER — DATE 1-19-07

APPROVALS:

STATE OF UTAH
DIVISION OF FACILITIES CONSTRUCTION
AND MANAGEMENT — DATE

UTAH STATE PARKS
YUBA LAKE STATE PARK MANAGER — DATE

johansen & tuttle ENGINEERING INC.
BOX 487, CASTLE DALE, UTAH 84513 (435) 381-2523
FAX (435) 381-2522 email jt@etv.net

YUBA STATE PARK, UTAH

C:\EGPTY\uba Oasis\Yuba Oasis Summary.dwg, 4/30/2007 8:40:47 AM, LMS

INDEX TO SHEETS

SHEET	DESCRIPTION
1	TITLE SHEET
2	INDEX TO SHEETS AND SUMMARY OF QUANTITIES
3	TYPICAL SECTIONS
4	BOX AND CURB DRAIN DETAILS
5	DRAINAGE DETAILS
6	PLAN AND PROFILE PARKING LOT
7	PLAN AND PROFILE PARKING LOT
8	PLAN AND PROFILE RANGER ROAD
9	PLAN AND PROFILE WALKING PATH

SUMMARY OF QUANTITIES

SECTION	DESCRIPTION	UNIT	QUANTITY
8	MOBILIZATION	EACH	1
10	HOT MIX ASPHALT (HMA) (PG 58-22) 1/2 INCH MAX	SQ. FT.	63700
10	ASPHALT CONCRETE PAVEMENT SAWING	LIN. FT.	355
21	EXCAVATION	CU. YD.	4350
23	UNTREATED BASE COURSE (1" MAX) 6 INCHES THICK	SQ. FT.	69200
32	24 INCH CURB AND GUTTER	LIN. FT.	1365
32	DROP INLET BOX	EACH	1
51	24" CSP CULVERT (POLYMERIC COATING)	LIN. FT.	125
93	PAVEMENT MARKING PAINT	EACH	1

DESIGNED	HRT	12-06	CHECKED CEJ 1-07
DRAWN	LMS	1-07	CHECKED HRT 1-07
SURVEYED	BHT	12-06	CHECKED LMS 1-07
R.O.W.			CHECKED

johansen & tuttle ENGINEERING INC.
BOX 487, CASTLE DALE, UTAH 84513 (435) 381-2523
FAX (435) 381-2522 email jt@etv.net

STATE of UTAH DFCM
YUBA STATE PARK
PAVING IMPROVEMENTS
PROJECT No. 06099510

INDEX TO SHEETS
AND
SUMMARY OF QUANTITIES

PROJECT NO.
06099510

SHEET NO.
2

C:\EGPT\Yuba Oasis\Yuba Oasis Typicals.dwg, 4/30/2007 8:42:21 AM, LMS

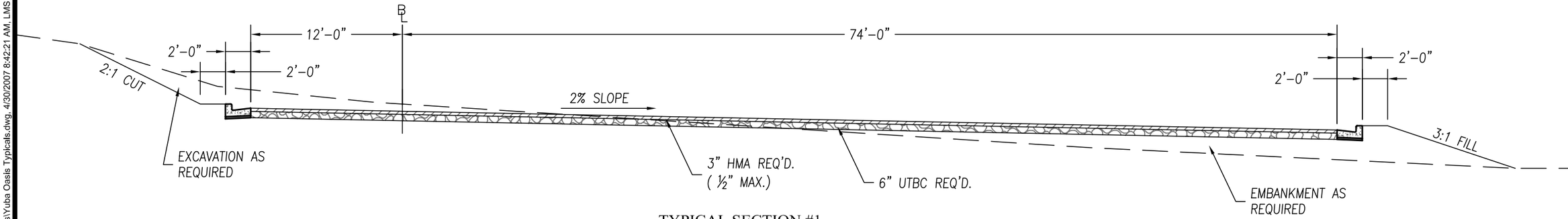

TYPICAL SECTION #1

PARKING AREA

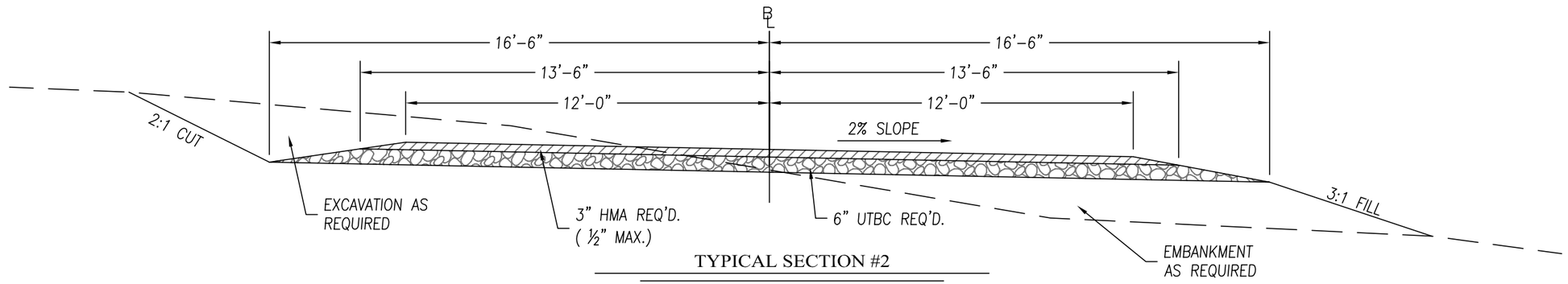

TYPICAL SECTION #2

PARKING AREA ROAD

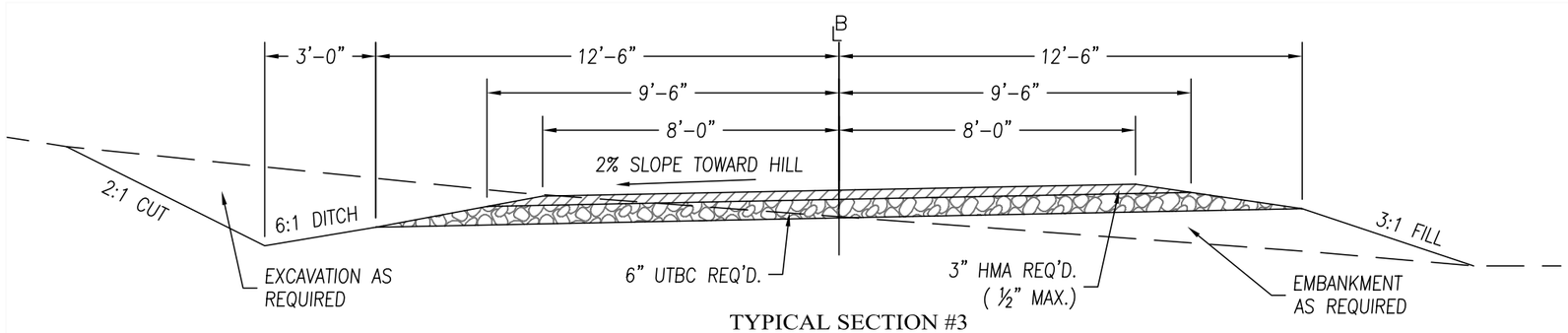

TYPICAL SECTION #3

RANGER ROAD

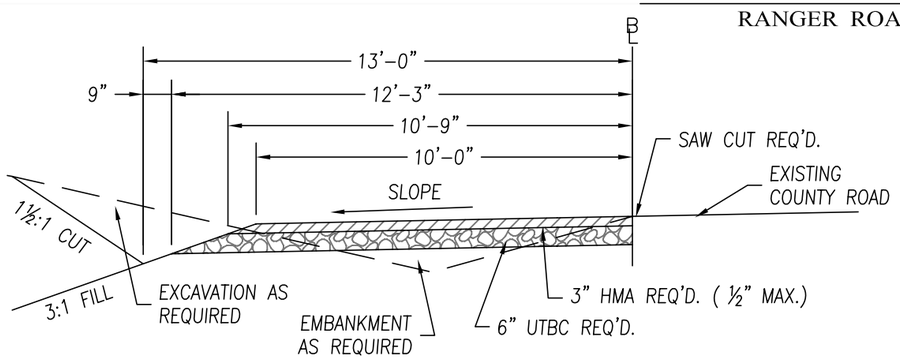

TYPICAL SECTION #4

WALKING PATH

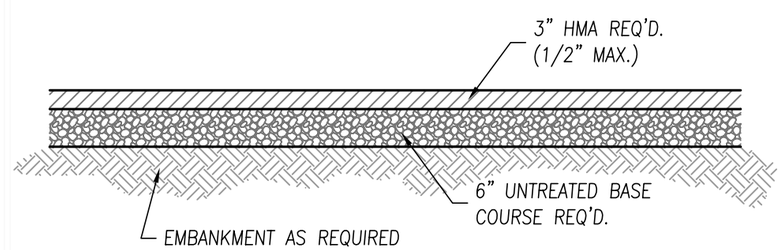

TYPICAL PAVING DETAIL

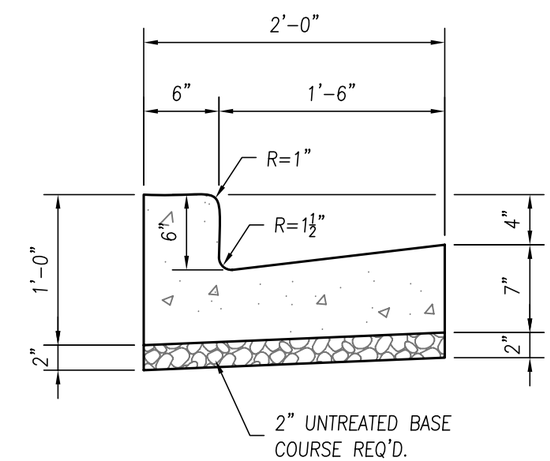

CURB & GUTTER DETAIL

DESIGNED	HRT	12-06	CHECKED
DRAWN	LMS	1-07	CHECKED
SURVEYED	BHT	12-06	CHECKED
R.O.W.			CHECKED

CEJ	1-07		
HRT	1-07		
LMS	1-07		

johansen & tuttle ENGINEERING INC.
BOX 487, CASTLE DALE, UTAH 84513 (435) 381-2523
FAX (435) 381-2522 email jt@etv.net

STATE of UTAH DFCM
YUBA STATE PARK
PAVING IMPROVEMENTS
PROJECT No. 06099510

TYPICAL SECTIONS

PROJECT NO. 06099510

SHEET NO. 3

C:\EGPT\Yuba Oasis\Yuba Oasis Typicals.dwg, 4/30/2007 8:43:01 AM, LMS

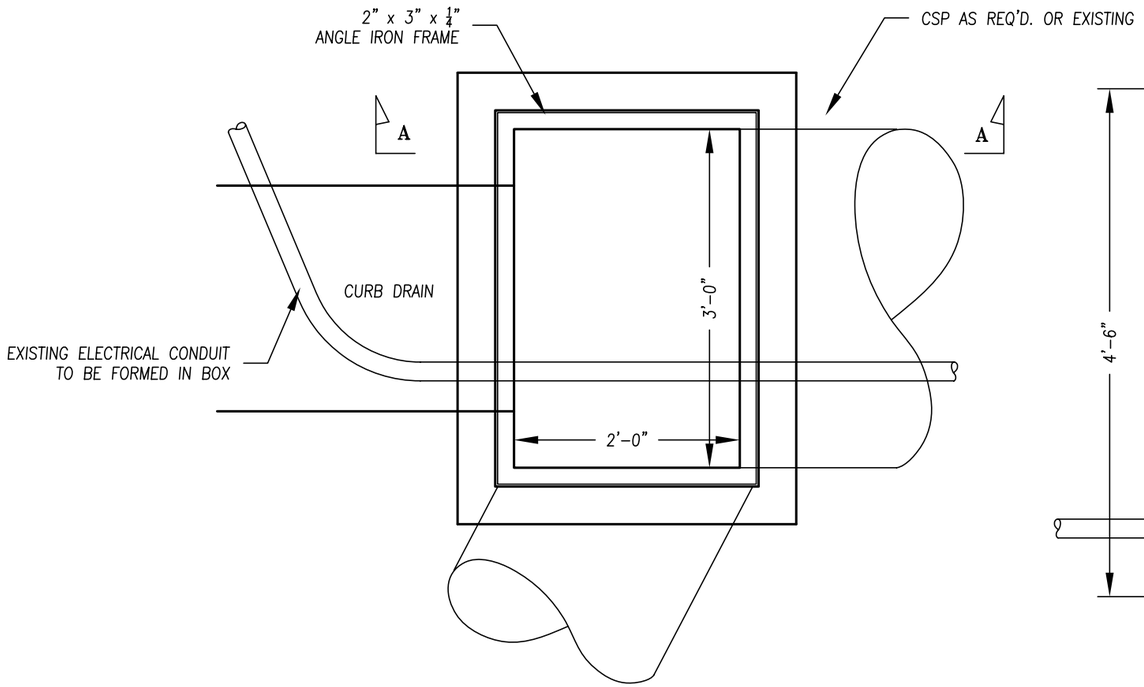

DROP INLET BOX

PLAN VIEW

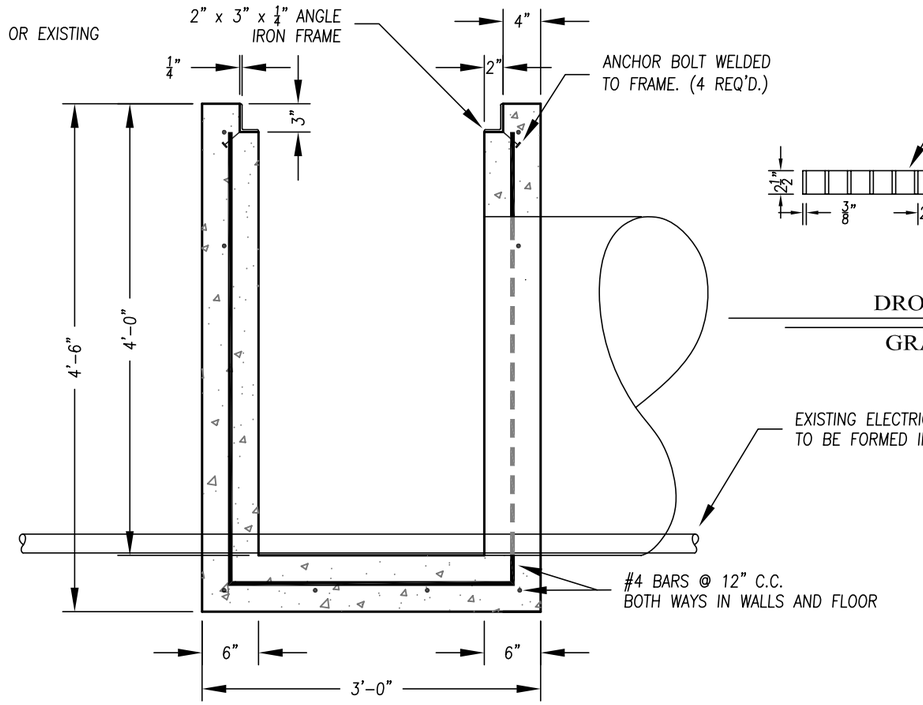

DROP INLET BOX

SECTION A-A

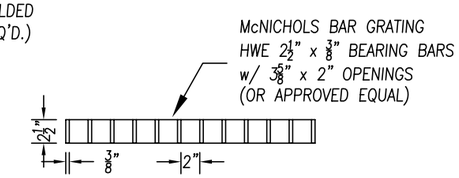

DROP INLET BOX

GRATE DETAIL

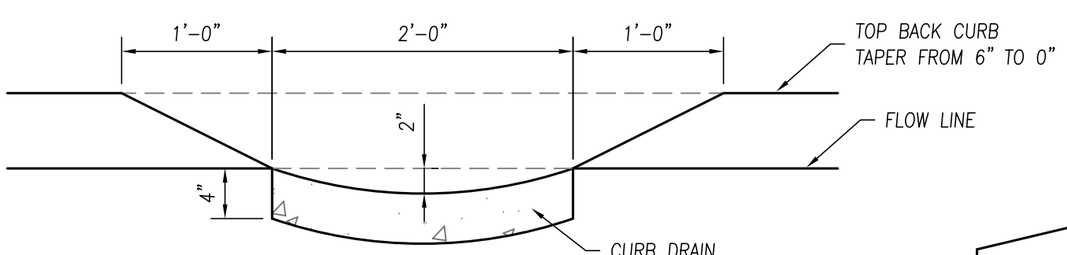

CURB DRAIN

SECTION B-B

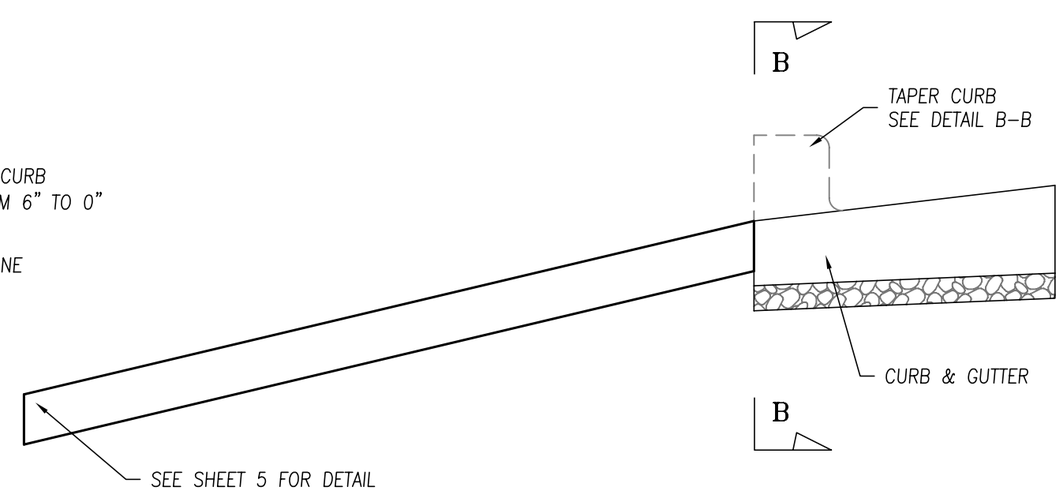

CURB DRAIN

DETAIL

DESIGNED	HRT	12-06	CHECKED	CEJ 1-07
DRAWN	LMS	1-07	CHECKED	HRT 1-07
SURVEYED	BHT	12-06	CHECKED	LMS 1-07
R.O.W.			CHECKED	

johansen & tuttle ENGINEERING INC.
BOX 487, CASTLE DALE, UTAH 84513 (435) 381-2523
FAX (435) 381-2522 email jt@etv.net

STATE of UTAH DFCM
YUBA STATE PARK
PAVING IMPROVEMENTS
PROJECT No. 06099510

BOX AND CURB
DRAIN DETAILS

PROJECT NO.
06099510

SHEET NO.
4

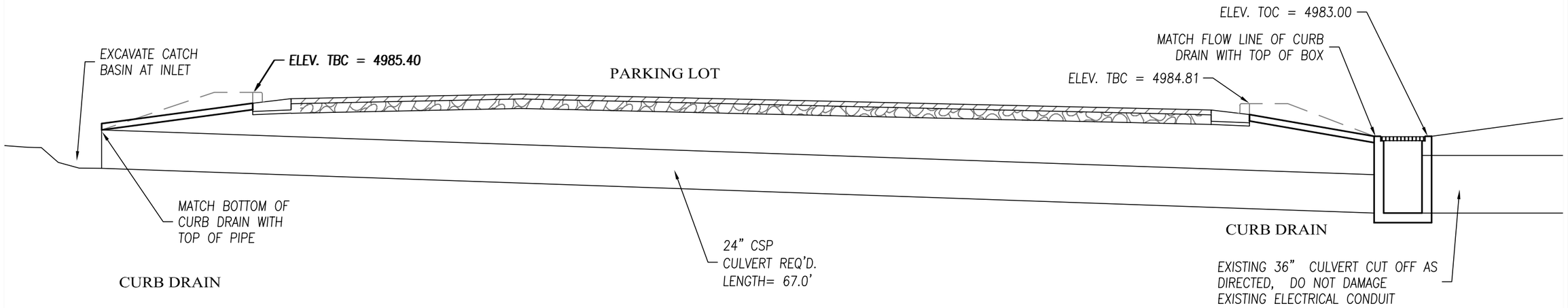

DRAINAGE DETAIL

SCHEMATIC

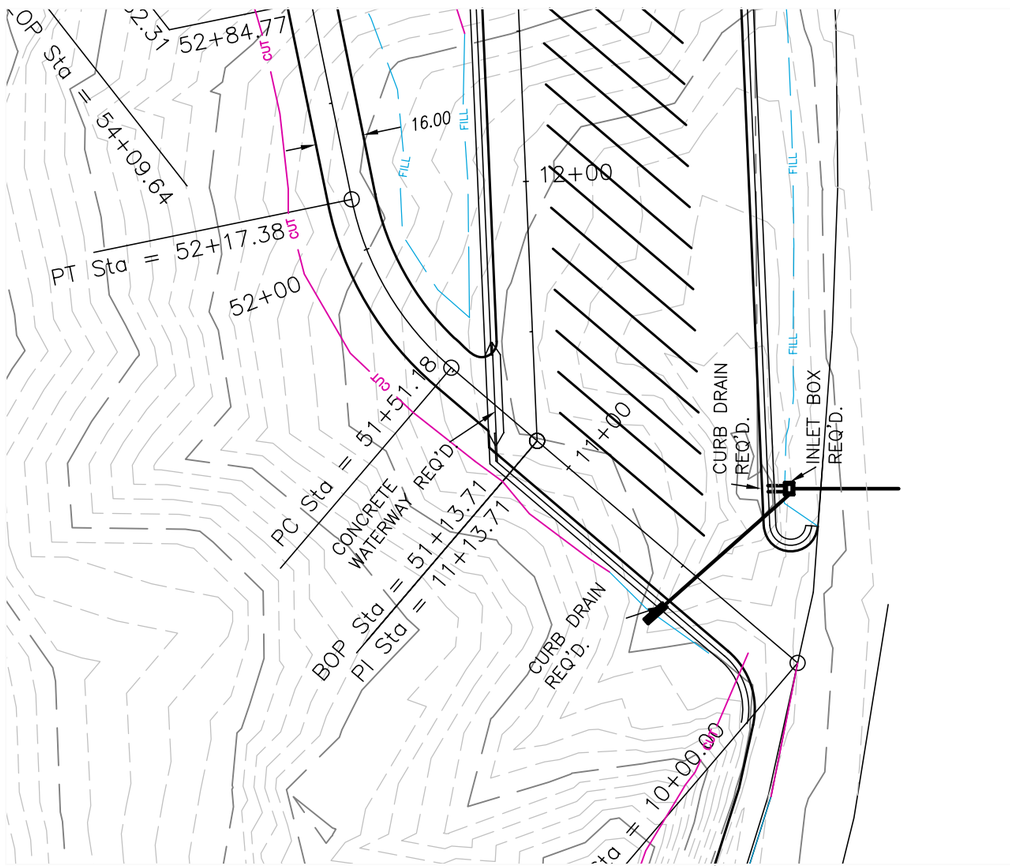

DRAINAGE DETAIL

PLAN VIEW

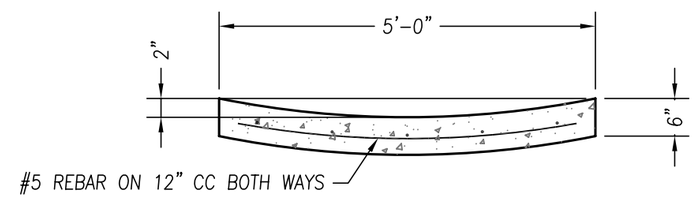

CONCRETE WATERWAY

SECTION

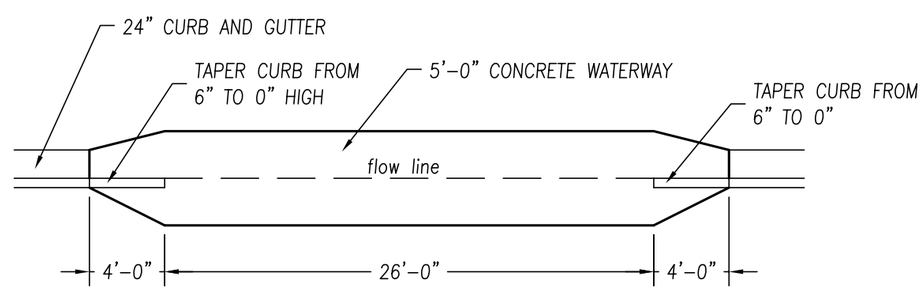

CONCRETE WATERWAY

PLAN VIEW

DESIGNED	HRT	12-06	CHECKED CEJ 1-07
DRAWN	LMS	1-07	CHECKED HRT 1-07
SURVEYED	BHT	12-06	CHECKED LMS 1-07
R.O.W.			CHECKED

johansen & tuttle ENGINEERING INC.
BOX 487, CASTLE DALE, UTAH 84513 (435) 381-2523
FAX (435) 381-2522 email jt@etv.net

STATE of UTAH DFCM
YUBA STATE PARK
PAVING IMPROVEMENTS
PROJECT No. 06099510

DRAINAGE DETAILS

PROJECT NO. 06099510

SHEET NO. 5

C:\EGPT\Yuba Oasis\Yuba Oasis Typicals.dwg, 4/30/2007 8:43:45 AM, LMS

C:\EGPT\Yuba Oasis\RCp01005.dwg, 4/30/2007 8:45:35 AM, LMS

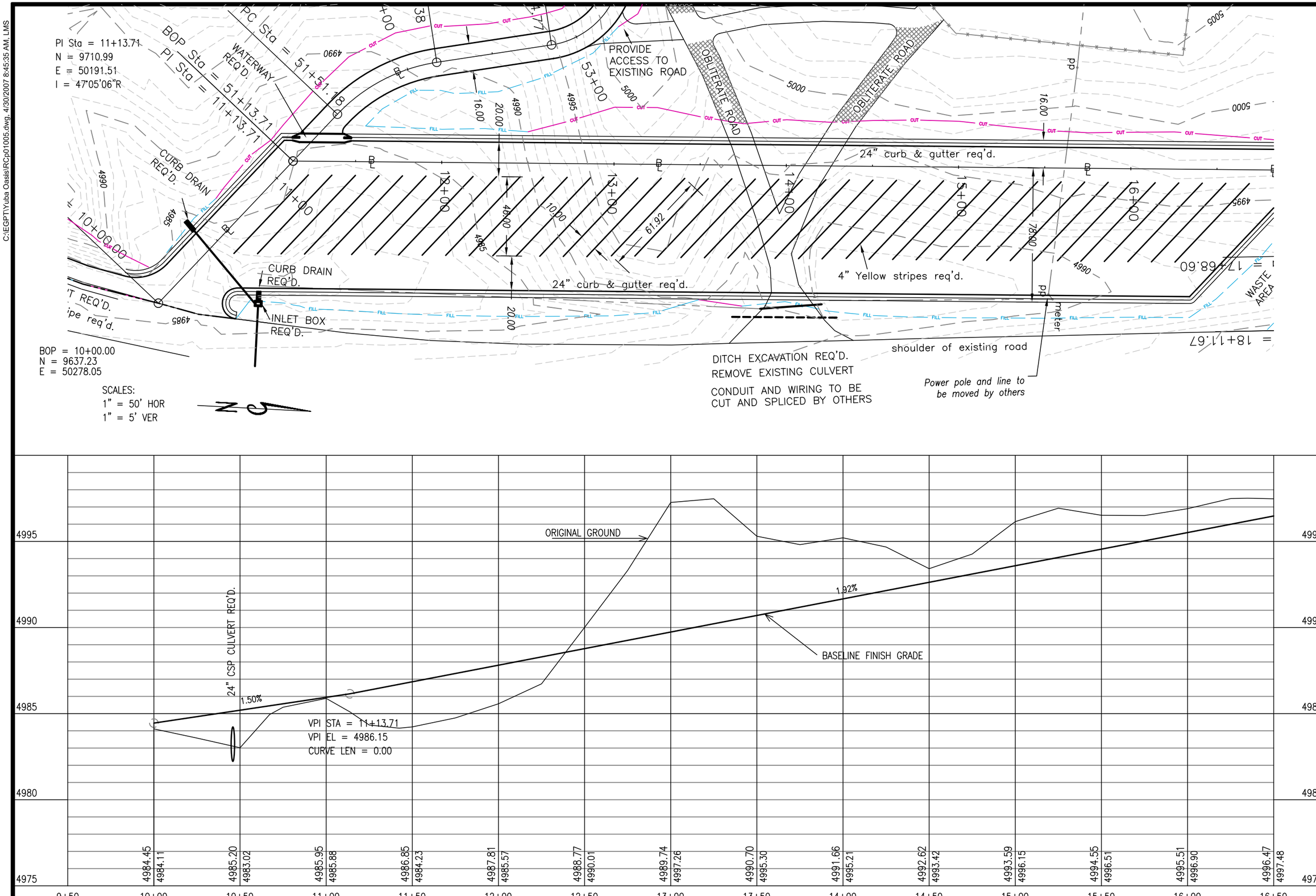

DESIGNED HRT	12-06	CHECKED CEJ	1-07
DRAWN LMS	1-07	CHECKED HRT	1-07
SURVEYED BHT	12-06	CHECKED LMS	1-07
R.O.W.		CHECKED	

johansen & tuttle ENGINEERING INC.
BOX 487, CASTLE DALE, UTAH 84513 (435) 381-2523
FAX (435) 381-2522 EMAIL jt@etv.net

STATE of UTAH DFCM
YUBA STATE PARK
PAVING IMPROVEMENTS
PROJECT No. 06099510

PLAN AND PROFILE
PARKING LOT

PROJECT NO. 06099510

SHEET NO. 6

C:\EGPTY\uba Oasis\RCp02005.dwg, 4/30/2007 8:46:38 AM, LMS

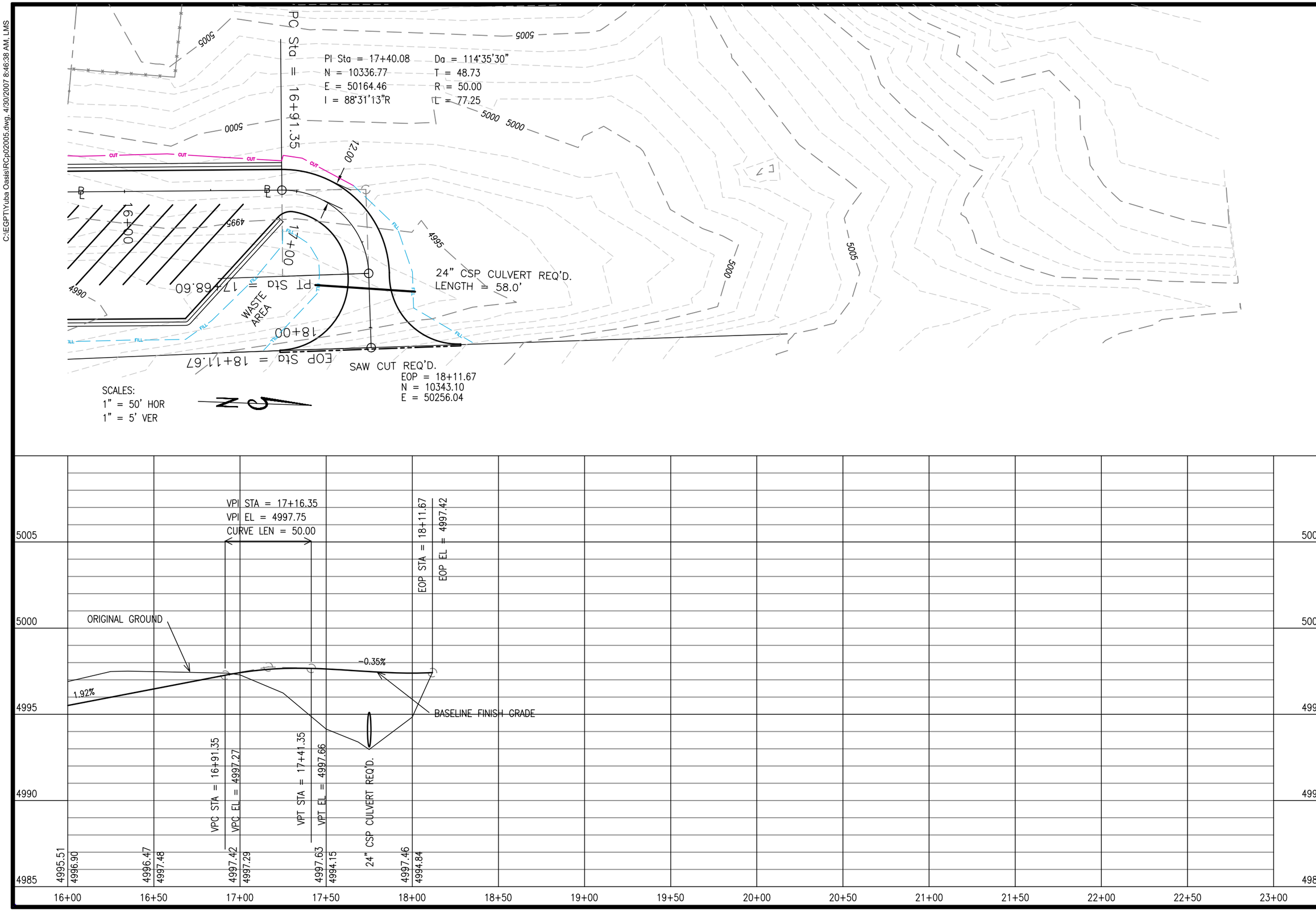

DESIGNED HRT	12-06	CHECKED CEJ	1-07
DRAWN LMS	1-07	CHECKED HRT	1-07
SURVEYED BHT	12-06	CHECKED LMS	1-07
R.O.W.		CHECKED	

johansen & tuttle ENGINEERING INC.
BOX 487, CASTLE DALE, UTAH 84513 (435) 381-2523
FAX (435) 381-2522 EMAIL jt@etv.net

STATE of UTAH DFCM
YUBA STATE PARK
PAVING IMPROVEMENTS
PROJECT No. 06099510

PLAN AND PROFILE
PARKING LOT

PROJECT NO.
06099510

SHEET NO.
7

C:\EGPT\Yuba Oasis\RCp01006.dwg, 4/30/2007 8:47:38 AM, LMS

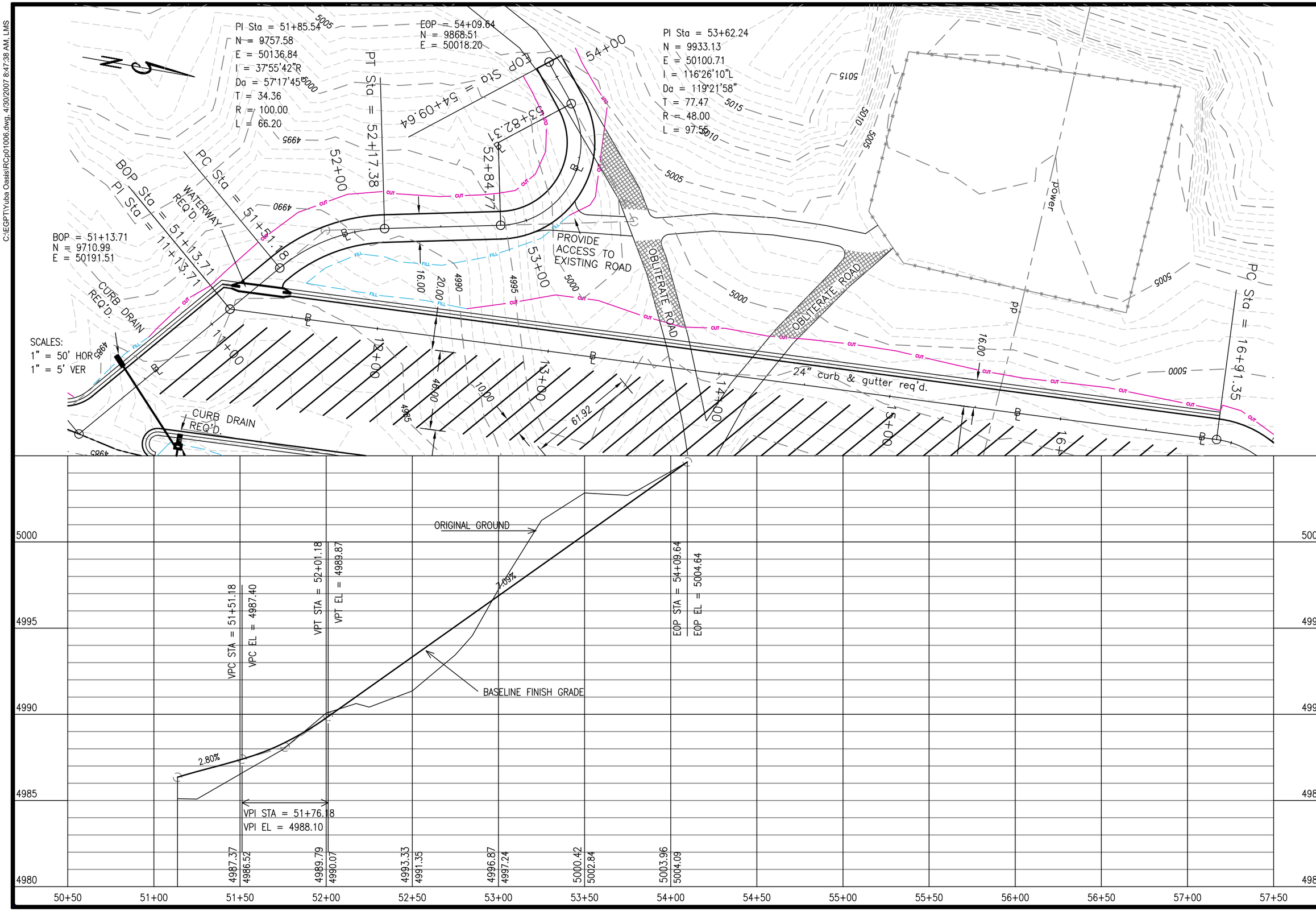

DESIGNED HRT	12-06	CHECKED CEJ	1-07
DRAWN LMS	1-07	CHECKED HRT	1-07
SURVEYED BHT	12-06	CHECKED LMS	1-07
R.O.W.		CHECKED	

johansen & tuttle ENGINEERING INC.
BOX 487, CASTLE DALE, UTAH 84513 (435) 381-2523
FAX (435) 381-2522 EMAIL jt@etv.net

STATE of UTAH DFCM
YUBA STATE PARK
PAVING IMPROVEMENTS
PROJECT No. 06099510

PLAN AND PROFILE
RANGER ROAD

PROJECT NO. 06099510

SHEET NO. 8

C:\EGPTY\Yuba Oasis\RCp01003.dwg, 4/30/2007 8:48:45 AM, LMS

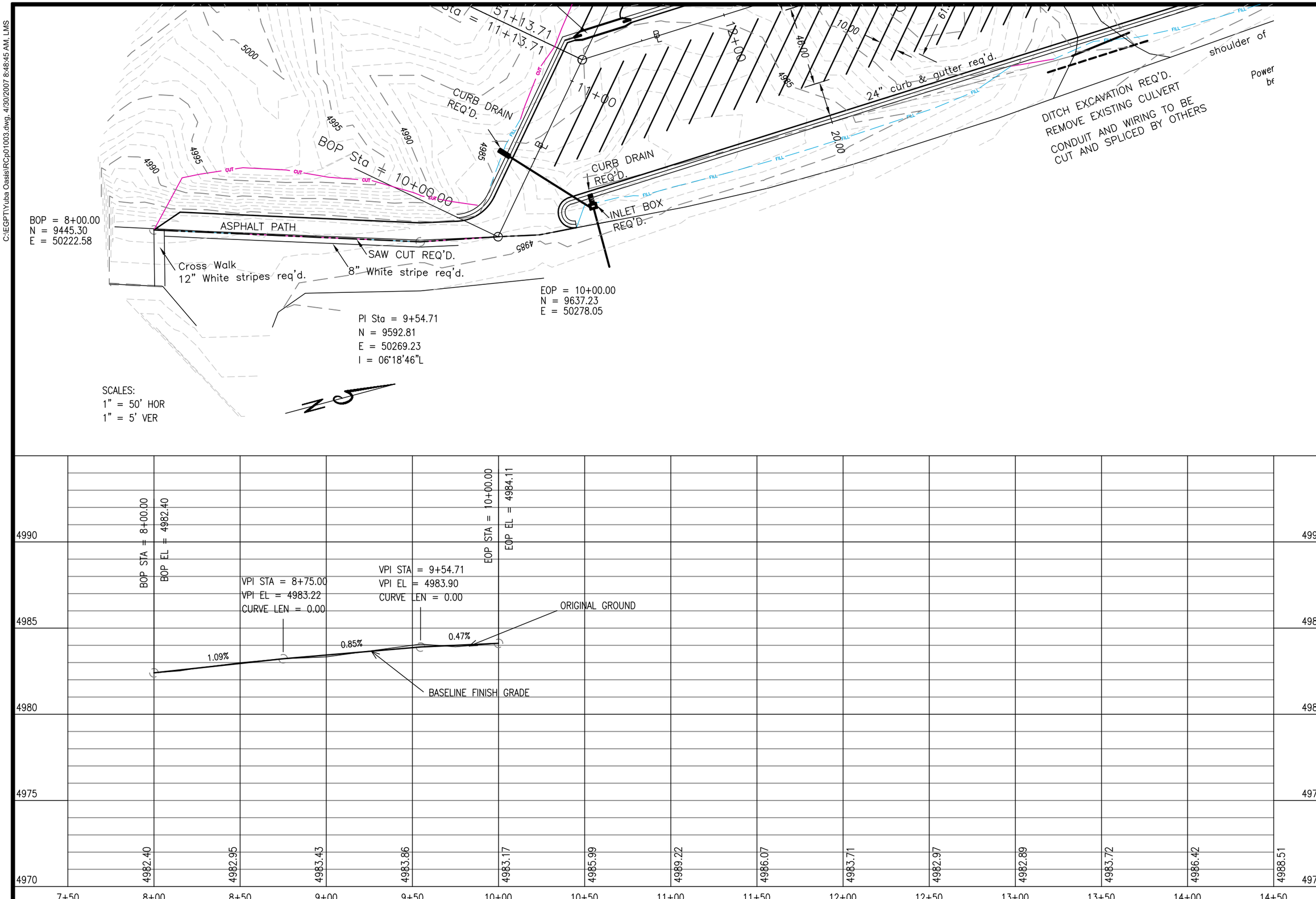

DESIGNED HRT	12-06	CHECKED CEJ	1-07	
DRAWN LMS	1-07	CHECKED HRT	1-07	
SURVEYED BHT	12-06	CHECKED LMS	1-07	
R.O.W.		CHECKED		

johansen & tuttle ENGINEERING INC.
BOX 487, CASTLE DALE, UTAH 84513 (435) 381-2523
FAX (435) 381-2522 EMAIL jt@etv.net

STATE of UTAH DFCM
YUBA STATE PARK
PAVING IMPROVEMENTS
PROJECT No. 06099510

PLAN AND PROFILE
WALKING PATH

PROJECT NO.
06099510

SHEET NO.
9