MULTI-STEP BIDDING PROCESS
FOR
CONTRACTORS

Request For Solicitation For Construction Services

Stage II – Roofing Contractors Bidders List

October 5, 2006

AUTOMOTIVE MECHANICS BUILDING - REROOF

DIXIE STATE COLLEGE
ST. GEORGE, UTAH

DFCM Project No. 06017640

Axis Architects
352 South Denver Street, #205
Salt Lake City, Utah 84111

TABLE OF CONTENTS

	Page #
Title Sheet	1
Table of Contents	2
Invitation to Bid	3
Stage II – Multi-Step Bidding Process	4
Stage II - Project Schedule	8
Bid Form	9
Bid Bond Form	11
Contractors Sublist Form	12
Fugitive Dust Plan	15
Contractor's Agreement	22
Performance Bond	27
Payment Bond	28
Change Order Form	29
Certificate of Substantial Completion	30

Current copies of the following documents are hereby made part of these contract documents by reference. These documents are available on the DFCM web site at http://dfcm.utah.gov or are available upon request from DFCM:

DFCM General Conditions dated May 25, 2005
DFCM Application and Certificate for Payment dated May 25, 2005

Technical Specifications:
Drawings:

The Agreement and General Conditions dated May 25, 2005 have been updated from versions that were formally adopted and in use prior to this date. The changes made to the General Conditions are identified in a document entitled Revisions to General Conditions that is available on DFCM's web site at http://dfcm.utah.gov

INVITATION TO BID

ONLY FIRMS PRE-QUALIFIED DURING STAGE I OF THE RFS ARE ALLOWED TO BID ON THIS PROJECT

The State of Utah - Division of Facilities Construction and Management (DFCM) is requesting bids for the construction of the following project:

AUTOMOTIVE MECHANICS BUILDING – REROOF
DIXIE STATE COLLEGE – ST. GEORGE, UTAH
DFCM PROJECT NO: 06017640

Project Description: Remove existing built up roof system down to light weight concrete. Supply and install new ¼ Denz Deck Prime and reinforced 60 mil TPO membrane. This system is fully adhered and requires new 24 gauge metal cap along parapet wall. Construction Cost Estimate: $140,000

FIRM NAME	POINT OF CONTACT	PHONE	FAX
Capitol Roofing Service	Stewart B. Paulsen	(801) 562-5568	(801) 562-1159
Clark's Quality Roofing	Perry Clark	(801) 266-3575	(801) 266-3692
Collins Roofing, Inc.	Douglas Collins	(801) 224-0361	(801) 224-0361
Contract West Roofing, Inc.	Craig Peters	(801) 943-2427	(801) 943-0257
Conwest, Inc.	Phil Scarborough	(801) 553-0640	(815) 550-1136
Dave Atkinson Roofing, Inc.	Dave Atkinson	(435) 770-4299	(435) 258-2225
Island Heights Construction, Inc.	Terry Cronquist	(435) 753-7403	(435) 753-7452
Kendrick Brothers Roofing, Inc.	Brad L. Kendrick	(801) 731-2000	(801) 731-2020
Nielco Roofing and Sheet Metal, Inc.	Gary Nielson	(801) 263-0444	(801) 263-0485
Redd Roofing Company	K. Frank Redd	(801) 621-1363	(801) 621-1540
Summit Roofing & Waterproofing	Phil Whiting	(801) 529-2596	(801) 732-2186
Superior Roofing and Sheet Metal, Inc	Blake Redd	(801) 266-1473	(801) 266-1522
Utah Tile and Roofing, Inc.	Paul Seppi	(801) 266-9694	(801) 266-6836
Utah Western Roofing	Scott Laufenberg	(801) 294-6154	(801) 294-6155

The bid documents will be available at 10:00 AM on Thursday, October 5, 2006 in electronic format from DFCM at 4110 State Office Building, Salt Lake City, Utah 84114, telephone (801)538-3018 and on the DFCM web page at http://dfcm.utah.gov. For questions regarding this project, please contact Michael A. Ambre, Project Manager, DFCM, at (801)209-9104. No others are to be contacted regarding this project.

A **MANDATORY** pre-bid meeting and site visit will be held at 8:00 AM on Tuesday, October 10, 2006 at the Dixie State College Automotive Mechanics Building in St. George, Utah. Please refer to site map (http://dsc.dixie.edu/physplant/maps/) for directions). All pre-qualified prime contractors wishing to bid on this project must attend this meeting.

Bids must be submitted by 3:30 PM on Wednesday, October 18, 2006 to DFCM, 4110 State Office Building, Salt Lake City, Utah 84114. Bids will be opened and read aloud in the DFCM Conference Room, 4110 State Office Building, Salt Lake City, Utah. Note: Bids must be received at 4110 State Office Building by the specified time. The contractor shall comply with and require all of its subcontractors to comply with the license laws as required by the State of Utah. A bid bond in the amount of five percent (5%) of the bid amount, made payable to the Division of Facilities Construction and Management on DFCM's bid bond form, shall accompany the bid.

The Division of Facilities Construction & Management reserves the right to reject any or all bids or to waive any formality or technicality in any bid in the interest of the State.

DIVISION OF FACILITIES CONSTRUCTION AND MANAGEMENT
MARLA WORKMAN, CONTRACT COORDINATOR
4110 State Office Bldg., Salt Lake City, Utah 84114

STAGE II - MULTI-STEP BIDDING PROCESS

ONLY FIRMS PRE-QUALIFIED DURING STAGE I OF THE RFS ARE ALLOWED TO BID ON THIS PROJECT

1. Invitational Bid Procedures

The following is an overview of the invitational bid process. More detailed information is contained throughout the document. Contractors are responsible for reading and complying with all information contained in this document.

Notification: DFCM will notify each registered pre-qualified firm (via fax or e-mail) when a project is ready for Construction Services and invite them to bid on the project.

Description of Work: A description of work or plans/specifications will be given to each contractor. If required, the plans and specifications will be available on the DFCM web page at http://dfcm.utah.gov and on CDs from DFCM, at 4110 State Office Building, Salt Lake City, Utah 84114.

Schedule: The Stage II Schedule shows critical dates including the mandatory pre-bid site meeting (if required), the question and answer period, the bid submittal deadline, the subcontractor list submittal deadline, etc. Contractors are responsible for meeting all deadlines shown on the schedule.

Mandatory Pre-Bid Site Meeting: If a firm fails to attend a pre-bid site meeting labeled "Mandatory" they will not be allowed to bid on the project. At the mandatory meeting, contractors may have an opportunity to inspect the site, receive additional instructions and ask questions about project. The schedule contains information on the date, time, and place of the mandatory pre-bid site meeting.

Written Questions: All questions must be in writing and directed to DFCM's project manager assigned to this project. No others are to be contacted regarding this project. The schedule contains information on the deadline for submitting questions.

Addendum: All clarifications from DFCM will be in writing and issued as an addendum to the RFS. Addenda will be posted on DFCM's web site at http://dfcm.utah.gov. Contractors are responsible for obtaining information contained in each addendum from the web site. Addenda issued prior to the submittal deadline shall become part of the bidding process and must be acknowledged on the bid form. Failure to acknowledge addenda may result in disqualification from bidding.

Submitting Bids: Bids must be submitted to DFCM 4110 State Office Building, Salt Lake City, Utah 84114 by the deadline indicated on the schedule. Bids submitted after the deadline will not be accepted. Bids will be opened at DFCM on the date, time, and place indicated on the schedule.

Subcontractors List: The firm selected for the project must submit a list of all subcontractors by the deadline indicated on the schedule contained in this document.

Pre-qualified List of Contractors: Contractors shall remain on DFCM's list of pre-qualified contractors provided: (a) they maintain a performance rating of 4 or greater on each project, (b) they are not suspended for failure to comply with requirements of their contract, (c) the firm has not undergone a significant reorganization involving the loss of key personnel (site superintendents, project managers, owners, etc.) to a degree such that the firm no longer meets the pre-qualification requirements outlined in Stage I, (d) the financial viability of the firm has not significantly changed, and (e) the firm is not otherwise disqualified by DFCM. Note: If a contractor fails to comply with items (a) through (e) above, they may be removed from DFCM's list of pre-qualified contractors following an evaluation by a review committee. Contractors will be given the opportunity to address the review committee before a decision is made. Pre-qualified contractors are ONLY authorized to bid on projects within the discipline that they were originally pre-qualified under.

2. Drawings and Specifications and Interpretations

Drawings, specifications and other contract documents may be obtained as stated in the Invitation to Bid. If any firm is in doubt as to the meaning or interpretation of any part of the drawings, specifications, scope of work or contract documents, they shall submit, in writing, a request for interpretation to the authorized DFCM representative by the deadline identified in the schedule. Answers to questions and interpretations will be made via addenda issued by DFCM. Neither DFCM or the designer shall be responsible for incorrect information obtained by contractors from sources other than the official drawings/specifications and addenda issued by DFCM.

3. Product Approvals

Where reference is made to one or more proprietary products in the contract documents, but restrictive descriptive materials of one or more manufacturer(s) is referred to in the contract documents, the products of other manufacturers will be accepted, provided they equal or exceed the standards set forth in the drawings and specifications and are compatible with the intent and purpose of the design, subject to the written approval of the Designer. Such written approval must occur prior to the deadline established for the last scheduled addendum to be issued. The Designer's written approval will be included as part of the addendum issued by DFCM. If the descriptive material is not restrictive, the products of other manufacturers specified will be accepted without prior approval provided they are compatible with the intent and purpose of the design as determined by the Designer.

4. Addenda

All clarifications from DFCM will be in writing and issued as an addendum to the RFS. Addenda will be posted on DFCM's web site at http://dfcm.utah.gov. Contractors are responsible for obtaining information contained in each addendum from the web site. Addenda issued prior to the submittal deadline shall become part of the bidding process and must be acknowledged on the bid form. Failure to acknowledge addenda shall result in disqualification from bidding. DFCM shall not be responsible for incorrect information obtained by contractors from sources other than official addenda issued by DFCM.

5. Financial Responsibility of Contractors, Subcontractors and Sub-subcontractors

Contractors shall respond promptly to any inquiry in writing by DFCM to any concern of financial responsibility of the Contractor, Subcontractor or Sub-subcontractor. Failure to respond may result in suspension from DFCM's list of pre-qualified contractors.

6. Licensure

The Contractor shall comply with and require all of its Subcontractors to comply with the license laws as required by the State of Utah.

7. Time is of the Essence

Time is of the essence in regard to all the requirements of the contract documents.

8. Bids

Before submitting a bid, each bidder shall carefully examine the contract documents; shall visit the site of the work; shall fully inform themselves as to all existing conditions and limitations; and shall include in the bid the cost of all items required by the contract documents including those added via addenda. If the bidder observes that portions of the contract documents are at variance with applicable laws, building codes, rules, regulations or contain obvious erroneous or uncoordinated information, the bidder shall promptly notify the DFCM Project Manager prior to the bidding deadline. Changes necessary to correct these issues will be made via addenda issued by DFCM.

The bid, bearing original signatures, must be typed or handwritten in ink on the Bid Form provided in the procurement documents and submitted in a sealed envelope at the location specified by the Invitation to Bid prior to the published deadline for the submission of bids.

Bid bond security, in the amount of five percent (5%) of the bid, made payable to the Division of Facilities Construction and Management, shall accompany bid. THE BID BOND MUST BE ON THE BID BOND FORM PROVIDED IN THE PROCUREMENT DOCUMENTS IN ORDER TO BE CONSIDERED AN ACCEPTABLE BID.

If the bid bond security is submitted on a form other than DFCM's required bid bond form, and the bid security meets all other legal requirements, the bidder will be allowed to provide an acceptable bid bond by the close of business on the next business day following notification by DFCM of submission of a defective bid bond security. **A cashier's check cannot be used as a substitute for a bid bond.**

9. Listing of Subcontractors

Listing of Subcontractors shall be as summarized in the "Instructions and Subcontractor's List Form", included as part of the contract documents. The subcontractors list shall be delivered to DFCM or faxed to DFCM at (801)538-3677 within 24 hours of the bid opening. Requirements for listing additional subcontractors will be listed in the contract documents.

DFCM retains the right to audit or take other steps necessary to confirm compliance with requirements for the listing and changing of subcontractors. Any contractor who is found to not be in compliance with these requirements may be suspended from DFCM's list of pre-qualified contractors.

10. Contract and Bond

The Contractor's Agreement will be in the form provided in this document. The duration of the contract shall be for the time indicated by the project completion deadline shown on the schedule. The successful bidder, simultaneously with the execution of the Contractor's Agreement, will be required to furnish a performance bond and a payment bond, both bearing original signatures, upon the forms provided in the procurement documents. The performance and payment bonds shall be for an amount equal to one hundred percent (100%) of the Contract Sum and secured from a company that meets the requirements specified in the requisite forms. Any bonding requirements for Subcontractors will be specified in the Supplementary General Conditions.

11. Award of Contract

The Contract will be awarded as soon as possible to the lowest, responsive and responsible bidder, based on the lowest combination of base bid and acceptable prioritized alternates, provided the bid is reasonable, is in the interests of DFCM to accept and after applying the Utah Preference Laws in U.C.A. Title 63, Chapter 56. DFCM reserves the right to waive any technicalities or formalities in any bid or in the bidding. Alternates will be accepted on a prioritized basis with Alternate 1 being highest priority, Alternate 2 having second priority, etc. Alternates will be selected in prioritized order up to the construction cost estimate.

12. Right to Reject Bids

DFCM reserves the right to reject any or all Bids.

13. Withdrawal of Bids

Bids may be withdrawn on written request received from bidders within 24 hours after the bid opening if the contractor has made an error in preparing the bid.

14. DFCM Contractor Performance Rating

As a contractor completes each project, DFCM will evaluate project performance based on the enclosed "DFCM Contractor Performance Rating" form. The ratings issued on this project may affect the firm's "pre-qualified" status and their ability to obtain future work with DFCM.

Stage II
PROJECT SCHEDULE

PROJECT NAME:	**AUTOMOTIVE MECHANICS BUILDING - REROOF** **DIXIE STATE COLLEGE – ST. GEORGE, UTAH**			
DFCM PROJECT NO.:	**06017640**			
Event	**Day**	**Date**	**Time**	**Place**
Stage II Bidding Documents Available	Thursday	October 5, 2006	10:00 AM	DFCM 4110 State Office Building SLC, UT and DFCM web site*
Mandatory Pre-bid Site Meeting	Tuesday	October 10, 2006	8:00 AM	Automotive Mechanics Building Dixie State College St. George, UT **http://dsc.dixie.edu/physplant/maps/**
Deadline for Submitting Questions	Monday	October 16, 2006	4:00 PM	Mike Ambre - DFCM 4110 State Office Building SLC, UT
Final Addendum Issued	Tuesday	October 17, 2006	4:00 PM	DFCM web site*
Prime Contractors Turn in Bid and Bid Bond / Bid Opening in DFCM Conference Room	Wednesday	October 18, 2006	3:30 PM	DFCM 4110 State Office Building SLC, UT
Subcontractors List Due	Thursday	October 19, 2006	3:30 PM	DFCM 4110 State Office Building SLC, UT Fax (801)538-3677
Project Completion Deadline	Friday	February 23, 2007		

* DFCM's web site address is http://dfcm.utah.gov

BID FORM

NAME OF BIDDER _____ DATE _____

To the Division of Facilities Construction and Management
4110 State Office Building
Salt Lake City, Utah 84114

The undersigned, responsive to the "Notice to Contractors" and in accordance with the Request for Bids for the **AUTOMOTIVE MECHANICS BUILDING REROOF – DIXIE STATE COLLEGE – ST. GEORGE, UTAH - DFCM PROJECT NO. 06017640** and having examined the Contract Documents and the site of the proposed Work and being familiar with all of the conditions surrounding the construction of the proposed Project, including the availability of labor, hereby proposes to furnish all labor, materials and supplies as required for the Work in accordance with the Contract Documents as specified and within the time set forth and at the price stated below. This price is to cover all expenses incurred in performing the Work required under the Contract Documents of which this bid is a part:

I/We acknowledge receipt of the following Addenda: _____

For all work shown on the Drawings and described in the Specifications and Contract Documents, I/we agree to perform for the sum of:

_____ DOLLARS ($_____)
(In case of discrepancy, written amount shall govern)

I/We guarantee that the Work will be Substantially Complete by **February 23, 2007** should I/we be the successful bidder, and agree to pay liquidated damages in the amount of **$200.00** per day for each day after expiration of the Contract Time as stated in Article 3 of the Contractor's Agreement.

This bid shall be good for 45 days after bid opening.

Enclosed is a 5% bid bond, as required, in the sum of _____

The undersigned Contractor's License Number for Utah is _____.

Upon receipt of notice of award of this bid, the undersigned agrees to execute the contract within ten (10) days, unless a shorter time is specified in Contract Documents, and deliver acceptable Performance and Payment bonds in the prescribed form in the amount of 100% of the Contract Sum for faithful performance of the contract. The Bid Bond attached, in the amount not less than five percent (5%) of the above bid sum, shall become the property of the Division of Facilities Construction and Management as liquidated damages for delay and additional expense caused thereby in the event that the contract is not executed and/or acceptable l00% Performance and Payment bonds are not delivered within time set forth.

Type of Organization: _____
(Corporation, Partnership, Individual, etc.)

Any request and information related to Utah Preference Laws:

_____

Respectfully submitted,

_____
Name of Bidder

ADDRESS:

_____

_____

_____
Authorized Signature

BID BOND

(Title 63, Chapter 56, U. C. A. l953, as Amended)

KNOW ALL PERSONS BY THESE PRESENTS:

That _____ hereinafter referred to as the "Principal," and_____, a corporation organized and existing under the laws of the State of _____, with its principal office in the City of _____ and authorized to transact business in this State and U. S. Department of the Treasury Listed, (Circular 570, Companies Holding Certificates of Authority as Acceptable Securities on Federal Bonds and as Acceptable Reinsuring Companies); hereinafter referred to as the "Surety," are held and firmly bound unto the STATE OF UTAH, hereinafter referred to as the "Obligee," in the amount of $_____ (5% of the accompanying bid), being the sum of this Bond to which payment the Principal and Surety bind themselves, their heirs, executors, administrators, successors and assigns, jointly and severally, firmly by these presents.

THE CONDITION OF THIS OBLIGATION IS SUCH that whereas the Principal has submitted to Obligee the accompanying bid incorporated by reference herein, dated as shown, to enter into a contract in writing for the_____ _____ Project.

NOW, THEREFORE, THE CONDITION OF THE ABOVE OBLIGATION IS SUCH, that if the said principal does not execute a contract and give bond to be approved by the Obligee for the faithful performance thereof within ten (10) days after being notified in writing of such contract to the principal, then the sum of the amount stated above will be forfeited to the State of Utah as liquidated damages and not as a penalty; if the said principal shall execute a contract and give bond to be approved by the Obligee for the faithful performance thereof within ten (10) days after being notified in writing of such contract to the Principal, then this obligation shall be null and void. It is expressly understood and agreed that the liability of the Surety for any and all defaults of the Principal hereunder shall be the full penal sum of this Bond. The Surety, for value received, hereby stipulates and agrees that obligations of the Surety under this Bond shall be for a term of sixty (60) days from actual date of the bid opening.

PROVIDED, HOWEVER, that this Bond is executed pursuant to provisions of Title 63, Chapter 56, Utah Code Annotated, 1953, as amended, and all liabilities on this Bond shall be determined in accordance with said provisions to same extent as if it were copied at length herein.

IN WITNESS WHEREOF, the above bounden parties have executed this instrument under their several seals on the date indicated below, the name and corporate seal of each corporate party being hereto affixed and these presents duly signed by its undersigned representative, pursuant to authority of its governing body.

DATED this _____ day of _____, 20_____ .

Principal's name and address (if other than a corporation):

_____

_____

By:_____

Title: _____

Principal's name and address (if a corporation):

_____

_____

By:_____

Title: _____

(Affix Corporate Seal)

Surety's name and address:

_____

_____

By: _____

Attorney-in-Fact (Affix Corporate Seal)

STATE OF _____)
) ss.
COUNTY OF _____)

On this ____ day of _____, 20____, personally appeared before me _____, whose identity is personally known to me or proved to me on the basis of satisfactory evidence, and who, being by me duly sworn, did say that he/she is the Attorney-in-fact of the above-named Surety Company, and that he/she is duly authorized to execute the same and has complied in all respects with the laws of Utah in reference to becoming sole surety upon bonds, undertakings and obligations, and that he/she acknowledged to me that as Attorney-in-fact executed the same.

Subscribed and sworn to before me this _____ day of _____, 20_____.
My Commission Expires: _____
Resides at: _____

_____
NOTARY PUBLIC

Agency: _____
Agent: _____
Address: _____
Phone: _____

Approved As To Form: May 25, 2005
By Alan S. Bachman, Asst Attorney General

INSTRUCTION AND SUBCONTRACTORS LIST FORM

The three low bidders, as well as all other bidders that desire to be considered, are required by law to submit to DFCM within 24 hours of bid opening a list of **ALL** first-tier subcontractors, including the subcontractor's name, bid amount and other information required by Building Board Rule and as stated in these Contract Documents, on the following basis:

PROJECTS UNDER $500,000 - ALL SUBS $20,000 OR OVER MUST BE LISTED
PROJECTS $500,000 OR MORE - ALL SUBS $35,000 OR OVER MUST BE LISTED

- Any additional subcontractors identified in the bid documents shall also be listed.
- The DFCM Director may not consider any bid submitted by a bidder if the bidder fails to submit a subcontractor list meeting the requirements of State law.
- List subcontractors for base bid as well as the impact on the list that the selection of any alternate may have.
- Bidder may not list more than one subcontractor to perform the same work.
- Bidder must list "Self" if performing work itself.

LICENSURE:

The subcontractor's name, the type of work, the subcontractor's bid amount, and the subcontractor's license number as issued by DOPL, if such license is required under Utah Law, shall be listed. Bidder shall certify that all subcontractors, required to be licensed, are licensed as required by State law. A subcontractor includes a trade contractor or specialty contractor and does not include suppliers who provide only materials, equipment, or supplies to a contractor or subcontractor.

BIDDER LISTING 'SELF' AS PERFORMING THE WORK:

Any bidder that is properly licensed for the particular work and intends to perform that work itself in lieu of a subcontractor that would otherwise be required to be on the subcontractor list, must insert the term 'Self' for that category on the subcontractor list form. Any listing of 'Self' on the sublist form shall also include the amount allocated for that work.

'SPECIAL EXCEPTION':

A bidder may list 'Special Exception' in place of a subcontractor when the bidder intends to obtain a subcontractor to perform the work at a later date because the bidder was unable to obtain a qualified or reasonable bid under the provisions of U.C.A.Section 63A-5-208(4). The bidder shall insert the term 'Special Exception' for that category of work, and shall provide documentation with the subcontractor list describing the bidder's efforts to obtain a bid of a qualified subcontractor at a reasonable cost and why the bidder was unable to obtain a qualified subcontractor bid. The Director must find that the bidder complied in good faith with State law requirements for any 'Special Exception' designation, in order for the bid to be considered. If awarded the contract, the Director shall supervise the bidder's efforts to obtain a qualified subcontractor bid. The amount of the awarded contract may not be adjusted to reflect the actual amount of the subcontractor's bid. Any listing of 'Special Exception' on the sublist form shall also include amount allocated for that work.

GROUNDS FOR DISQUALIFICATION:

The Director may not consider any bid submitted by a bidder if the bidder fails to submit a subcontractor list meeting the requirements of State law. Director may withhold awarding the contract to a particular bidder if one or more of the proposed subcontractors are considered by the Director to be unqualified to do the Work or for such other reason in the best interest of the State of Utah. Notwithstanding any other provision in these instructions, if there is a good faith error on the sublist form, at the sole discretion of the Director, the Director may provide notice to the contractor and the contractor shall have 24 hours to submit the correction to the Director. If such correction is submitted timely, then the sublist requirements shall be considered met.

CHANGES OF SUBCONTRACTORS SPECIFICALLY IDENTIFIED ON SUBLIST FORM:

Subsequent to twenty-four hours after the bid opening, the contractor may change its listed subcontractors only after receiving written permission from the Director based on complying with all of the following criteria.

(1) The contractor has established in writing that the change is in the best interest of the State and that the contractor establishes an appropriate reason for the change, which may include, but not is not limited to, the following reasons: the original subcontractor has failed to perform, or is not qualified or capable of performing, and/or the subcontractor has requested in writing to be released.
(2) The circumstances related to the request for the change do not indicate any bad faith in the original listing of the subcontractors.
(3) Any requirement set forth by the Director to ensure that the process used to select a new subcontractor does not give rise to bid shopping.
(4) Any increase in the cost of the subject subcontractor work is borne by the contractor.
(5) Any decrease in the cost of the subject subcontractor work shall result in a deductive change order being issued for the contract for such decreased amount.
(6) The Director will give substantial weight to whether the subcontractor has consented in writing to being removed unless the Contractor establishes that the subcontractor is not qualified for the work.

EXAMPLE:

Example of a list where there are only four subcontractors:

TYPE OF WORK	SUBCONTRACTOR, "SELF" OR "SPECIAL EXCEPTION"	SUBCONTRACTOR BID AMOUNT	CONT. LICENSE #
ELECTRICAL	ABCD Electric Inc.	$350,000.00	123456789000
LANDSCAPING	"Self"	300,000.00	123456789000
CONCRETE (ALTERNATE #1)	XYZ Concrete Inc	298,000.00	987654321000
MECHANICAL	"Special Exception" (attach documentation)	Fixed at: 350,000.00	(TO BE PROVIDED AFTER OBTAINING SUBCONTRACTOR)

PURSUANT TO STATE LAW - SUBCONTRACTOR BID AMOUNTS CONTAINED IN THIS SUBCONTRACTOR LIST SHALL NOT BE DISCLOSED UNTIL THE CONTRACT HAS BEEN AWARDED.

STATE OF UTAH - DEPARTMENT OF ADMINISTRATIVE SERVICES

Division of Facilities Construction and Management

DFCM

SUBCONTRACTORS LIST
FAX TO 801-538-3677

PROJECT TITLE: _____

Caution: You must read and comply fully with instructions.

TYPE OF WORK	SUBCONTRACTOR, "SELF" OR "SPECIAL EXCEPTION"	SUBCONTRACTOR BID AMOUNT	CONT. LICENSE #

We certify that:

1. This list includes all subcontractors as required by the instructions, including those related to the base bid as well as any alternates.
2. We have listed "Self" or "Special Exception" in accordance with the instructions.
3. All subcontractors are appropriately licensed as required by State law.

FIRM: _____

DATE: _____ SIGNED BY: _____

NOTICE: FAILURE TO SUBMIT THIS FORM, PROPERLY COMPLETED AND SIGNED, AS REQUIRED IN THESE CONTRACT DOCUMENTS, SHALL BE GROUNDS FOR DFCMS REFUSAL TO ENTER INTO A WRITTEN CONTRACT WITH BIDDER. ACTION MAY BE TAKEN AGAINST BIDDERS BID BOND AS DEEMED APPROPRIATE BY DFCM. ATTACH A SECOND PAGE IF NECESSARY.

FUGITIVE DUST PLAN

The Contractor will fill out the form and file the original with the Division of Air Quality and a copy of the form with the Division of Facilities Construction & Management, prior to the issuance of any notice to proceed.

The Contractor will be fully responsible for compliance with the Fugitive Dust Control Plan, including the adequacy of the plan, any damages, fines, liability, and penalty or other action that results from noncompliance.

Utah Division of Air Quality
April 20, 1999

GUIDANCE THAT MUST BE CONSIDERED IN DEVELOPING AND SUBMITTING A DUST CONTROL PLAN FOR COMPLIANCE WITH R307-309-3, 4, 5, 6, 7

Source Information:

1. Name of your operation (source): provide a name if the source is a construction site.

2. Address or location of your operation or construction site.

3. UTM coordinates or Longitude/Latitude of stationary emission points at your operation.

4. Lengths of the project, if temporary (time period).

5. Description of process (include all sources of dust and fugitive dust). Please, if necessary, use additional sheets of paper for this description. Be sure to mark it as an attachment.

6. Type of material processed or disturbed.

7. Amount of material processed (tons per year, tons per month, lbs./hr., and applicable units).

8. Destination of product (where will the material produced be used or transported, be specific, provide address or specific location), information needed for temporary relocation applicants.

9. Identify the individual who is responsible for the implementation and maintenance of fugitive dust control measures. List name(s), position(s) and telephone number(s).

10. List, and attach copies of any contract lease, liability agreement with other companies that may, or will, be responsible for dust control on site or on the project.

Description of Fugitive Dust Emission Activities
(Things to consider in addressing fugitive dust control strategies.)

1. Type of activities (drilling and blasting, road construction, development construction, earth moving and excavation, handling and hauling materials, cleaning and leveling, etc).

2. List type of equipment generating the fugitive dust.

3. Diagram the location of each activity or piece of equipment on site. Please attach the diagram.

4. Provide pictures or drawings of each activity. Include a drawing of the unpaved/paved road network used to move loads "on" and "off" property.

5. Vehicle miles travels on unpaved roads associated with the activity (average speed).

6. Type of dust emitted at each source (coal, cement, sand, soil, clay, dust, etc.)

7. Estimate the size of the release area at which the activity occurs (square miles). For haul or dirt roads include total miles of road in use during the activity.

Description of Fugitive Dust Emission Controls on Site

Control strategies must be designed to meet 20% opacity or less on site (a lesser opacity may be defined by Approval Order conditions or federal requirements such as NSPS), and control strategies must prevent exceeding 10% opacity from fugitive dust at the property boundary (site boundary) for compliance with R307-309-3.

1. Types of ongoing emission controls proposed for each activity, each piece of equipment, and haul roads.

2. Types of additional dust controls proposed for bare, exposed surfaces (chemical stabilization, synthetic cover, wind breaks, vegetative cover, etc).

3. Method of application of dust suppressant.

4. Frequency of application of dust suppressant.

5. Explain what triggers the use of a special control measure other than routine measures already in place, such as covered loads or measures covered by a permit condition (increase in opacity, high winds, citizen complaints, dry conditions, etc).

6. Explain in detail what control strategies/measures will be implemented off-hours, i.e., Saturdays/Sundays/Holidays, as well as 6 PM to 6 AM each day.

Description of Fugitive Dust Control Off-site

Prevent, to the maximum extent possible, deposition of materials, which may create fugitive dust on public and private paved roads in compliance with R307-309-5, 6, 7.

1. Types of emission controls initiated by your operation that are in place "off" property (application of water, covered loads, sweeping roads, vehicle cleaning, etc.).

2. Proposed remedial controls that will be initiated promptly if materials, which may create fugitive dust, are deposited on public and private paved roads.

Submit the Dust Control Plan to:

Executive Secretary
Utah Air Quality Board
POB 144820
15 North 1950 West
Salt Lake City, Utah 84114-4820

Phone: (801) 536-4000
FAX: (801) 536-4099

Fugitive Dust Control Plan Violation Report

When a source is found in violation of R307-309-3 or in violation of the Fugitive Dust Control Plan, the course must submit a report to the Executive Secretary within 15 days after receiving a Notice of Violation. The report must include the following information:

1. Name and address of dust source.

2. Time and duration of dust episode.

3. Meteorological conditions during the dust episode.

4. Total number and type of fugitive dust activities and dust producing equipment within each operation boundary. If no change has occurred from the existing dust control plan, the source should state that the activity/equipment is the same.

5. Fugitive dust activities or dust producing equipment that caused a violation of R-307-309-3 or the sources dust control plan.

6. Reasons for failing to control dust from the dust generating activity or equipment.

7. New and/or additional fugitive dust control strategies necessary to achieve compliance with R307-309-3, 4, 5, 6, or 7.

8. If it can not be demonstrated that the current approved Dust Control Plan can result in compliance with R307-309-3 through 7, the Dust Control Plan must be revised so as to demonstrate compliance with 307-309-3 through 7. Within 30 days of receiving a fugitive dust Notice of Violation, the source must submit the revised Plan to the Executive Secretary for review and approval.

Submit the Dust Control Plan to:

Executive Secretary
Utah Air Quality Board
POB 144820
15 North 1950 West
Salt Lake City, Utah 84114-4820

Phone: (801) 536-4000
FAX: (801) 536-4099

Attachments: DFCM Form FDR R-307-309, Rule 307-309

Page 7 of 7

CONTRACTOR'S AGREEMENT

FOR:

_____
_____
_____

THIS CONTRACTOR'S AGREEMENT, made and entered into this ____ day of _____, 20__, by and between the DIVISION OF FACILITIES CONSTRUCTION AND MANAGEMENT, hereinafter referred to as "DFCM", and _____, incorporated in the State of _____ and authorized to do business in the State of Utah, hereinafter referred to as "Contractor", whose address is _____.

WITNESSETH: WHEREAS, DFCM intends to have Work performed at _____ _____.

WHEREAS, Contractor agrees to perform the Work for the sum stated herein.

NOW, THEREFORE, DFCM and Contractor for the consideration provided in this Contractor's Agreement, agree as follows:

ARTICLE 1. SCOPE OF WORK. The Work to be performed shall be in accordance with the Contract Documents prepared by _____ and entitled "_____."

The DFCM General Conditions ("General Conditions") dated May 25, 2005 on file at the office of DFCM and available on the DFCM website, are hereby incorporated by reference as part of this Agreement and are included in the specifications for this Project. All terms used in this Contractor's Agreement shall be as defined in the Contract Documents, and in particular, the General Conditions.

The Contractor Agrees to furnish labor, materials and equipment to complete the Work as required in the Contract Documents which are hereby incorporated by reference. It is understood and agreed by the parties hereto that all Work shall be performed as required in the Contract Documents and shall be subject to inspection and approval of DFCM or its authorized representative. The relationship of the Contractor to the DFCM hereunder is that of an independent Contractor.

ARTICLE 2. CONTRACT SUM. The DFCM agrees to pay and the Contractor agrees to accept in full performance of this Contractor's Agreement, the sum of _____ _____ DOLLARS AND NO CENTS ($_____.00), which is the base bid, and which sum also includes the cost of a 100%

Performance Bond and a 100% Payment Bond as well as all insurance requirements of the Contractor. Said bonds have already been posted by the Contractor pursuant to State law. The required proof of insurance certificates have been delivered to DFCM in accordance with the General Conditions before the execution of this Contractor's Agreement.

ARTICLE 3. TIME OF COMPLETION AND DELAY REMEDY. The Work shall be Substantially Complete within _____ (___) calendar days after the date of the Notice to Proceed. Contractor agrees to pay liquidated damages in the amount of $_____ per day for each day after expiration of the Contract Time until the Contractor achieves Substantial Completion in accordance with the Contract Documents, if Contractor's delay makes the damages applicable. The provision for liquidated damages is: (a) to compensate the DFCM for delay only; (b) is provided for herein because actual damages can not be readily ascertained at the time of execution of this Contractor's Agreement; (c) is not a penalty; and (d) shall not prevent the DFCM from maintaining Claims for other non-delay damages, such as costs to complete or remedy defective Work.

No action shall be maintained by the Contractor, including its or Subcontractor or suppliers at any tier, against the DFCM or State of Utah for damages or other claims due to losses attributable to hindrances or delays from any cause whatsoever, including acts and omissions of the DFCM or its officers, employees or agents, except as expressly provided in the General Conditions. The Contractor may receive a written extension of time, signed by the DFCM, in which to complete the Work under this Contractor's Agreement in accordance with the General Conditions.

ARTICLE 4. CONTRACT DOCUMENTS. The Contract Documents consist of this Contractor's Agreement, the Conditions of the Contract (DFCM General Conditions, Supplementary and other Conditions), the Drawings, Specifications, Addenda and Modifications. The Contract Documents shall also include the bidding documents, including the Notice to Contractors, Instructions to Bidders/Proposers and the Bid/Proposal, to the extent not in conflict therewith and other documents and oral presentations that are documented as an attachment to the contract.

All such documents are hereby incorporated by reference herein. Any reference in this Contractor's Agreement to certain provisions of the Contract Documents shall in no way be construed as to lessen the importance or applicability of any other provisions of the Contract Documents.

ARTICLE 5. PAYMENT. The DFCM agrees to pay the Contractor from time to time as the Work progresses, but not more than once each month after the date of Notice to Proceed, and only upon Certificate of the A/E for Work performed during the preceding calendar month, ninety-five percent (95%) of the value of the labor performed and ninety-five percent (95%) of the value of materials furnished in place or on the site. The Contractor agrees to furnish to the DFCM invoices for materials purchased and on the site but not installed, for which the

Contractor requests payment and agrees to safeguard and protect such equipment or materials and is responsible for safekeeping thereof and if such be stolen, lost or destroyed, to replace same.

Such evidence of labor performed and materials furnished as the DFCM may reasonably require shall be supplied by the Contractor at the time of request for Certificate of Payment on account. Materials for which payment has been made cannot be removed from the job site without DFCM's written approval. Five percent (5%) of the earned amount shall be retained from each monthly payment. The retainage, including any additional retainage imposed and the release of any retainage, shall be in accordance with UCA 13-8-5 as amended. Contractor shall also comply with the requirements of UCA 13-8-5, including restrictions of retainage regarding subcontractors and the distribution of interest earned on the retention proceeds. The DFCM shall not be responsible for enforcing the Contractor's obligations under State law in fulfilling the retention law requirements with subcontractors at any tier.

ARTICLE 6. INDEBTEDNESS. Before final payment is made, the Contractor must submit evidence satisfactory to the DFCM that all payrolls, materials bills, subcontracts at any tier and outstanding indebtedness in connection with the Work have been properly paid. Final Payment will be made after receipt of said evidence, final acceptance of the Work by the DFCM as well as compliance with the applicable provisions of the General Conditions.

Contractor shall respond immediately to any inquiry in writing by DFCM as to any concern of financial responsibility and DFCM reserves the right to request any waivers, releases or bonds from Contractor in regard to any rights of Subcontractors (including suppliers) at any tier or any third parties prior to any payment by DFCM to Contractor.

ARTICLE 7. ADDITIONAL WORK. It is understood and agreed by the parties hereto that no money will be paid to the Contractor for additional labor or materials furnished unless a new contract in writing or a Modification hereof in accordance with the General Conditions and the Contract Documents for such additional labor or materials has been executed. The DFCM specifically reserves the right to modify or amend this Contractor's Agreement and the total sum due hereunder either by enlarging or restricting the scope of the Work.

ARTICLE 8. INSPECTIONS. The Work shall be inspected for acceptance in accordance with the General Conditions.

ARTICLE 9. DISPUTES. Any dispute, PRE or Claim between the parties shall be subject to the provisions of Article 7 of the General Conditions. DFCM reserves all rights to pursue its rights and remedies as provided in the General Conditions.

ARTICLE 10. TERMINATION, SUSPENSION OR ABANDONMENT. This Contractor's Agreement may be terminated, suspended or abandoned in accordance with the General Conditions.

ARTICLE 11. DFCM'S RIGHT TO WITHHOLD CERTAIN AMOUNT AND MAKE USE THEREOF. The DFCM may withhold from payment to the Contractor such amount as, in DFCM's judgment, may be necessary to pay just claims against the Contractor or Subcontractor at any tier for labor and services rendered and materials furnished in and about the Work. The DFCM may apply such withheld amounts for the payment of such claims in DFCM's discretion. In so doing, the DFCM shall be deemed the agent of Contractor and payment so made by the DFCM shall be considered as payment made under this Contractor's Agreement by the DFCM to the Contractor. DFCM shall not be liable to the Contractor for any such payment made in good faith. Such withholdings and payments may be made without prior approval of the Contractor and may be also be prior to any determination as a result of any dispute, PRE, Claim or litigation.

ARTICLE 12. INDEMNIFICATION. The Contractor shall comply with the indemnification provisions of the General Conditions.

ARTICLE 13. SUCCESSORS AND ASSIGNMENT OF CONTRACT. The DFCM and Contractor, respectively bind themselves, their partners, successors, assigns and legal representatives to the other party to this Agreement, and to partners, successors, assigns and legal representatives of such other party with respect to all covenants, provisions, rights and responsibilities of this Contractor's Agreement. The Contractor shall not assign this Contractor's Agreement without the prior written consent of the DFCM, nor shall the Contractor assign any moneys due or to become due as well as any rights under this Contractor's Agreement, without prior written consent of the DFCM.

ARTICLE 14. RELATIONSHIP OF THE PARTIES. The Contractor accepts the relationship of trust and confidence established by this Contractor's Agreement and covenants with the DFCM to cooperate with the DFCM and A/E and use the Contractor's best skill, efforts and judgment in furthering the interest of the DFCM; to furnish efficient business administration and supervision; to make best efforts to furnish at all times an adequate supply of workers and materials; and to perform the Work in the best and most expeditious and economic manner consistent with the interests of the DFCM.

ARTICLE 15. AUTHORITY TO EXECUTE AND PERFORM AGREEMENT. Contractor and DFCM each represent that the execution of this Contractor's Agreement and the performance thereunder is within their respective duly authorized powers.

ARTICLE 16. ATTORNEY FEES AND COSTS. Except as otherwise provided in the dispute resolution provisions of the General Conditions, the prevailing party shall be entitled to reasonable attorney fees and costs incurred in any action in the District Court and/or appellate body to enforce this Contractor's Agreement or recover damages or any other action as a result of a breach thereof.

IN WITNESS WHEREOF, the parties hereto have executed this Contractor's Agreement on the day and year stated hereinabove.

CONTRACTOR: _____

_____
Signature Date

Title: _____

_____
Please type/print name clearly

State of _____)
)
County of _____)

On this ____ day of _____, 20____, personally appeared before me, _____, whose identity is personally known to me (or proved to me on the basis of satisfactory evidence) and who by me duly sworn (or affirmed), did say that he (she) is the _____ (title or office) of the firm and that said document was signed by him (her) in behalf of said firm.

_____
Notary Public

(SEAL)

My Commission Expires _____

APPROVED AS TO AVAILABILITY OF FUNDS:

_____
Financial Manager, Date
Division of Facilities Construction and Management

DIVISION OF FACILITIES CONSTRUCTION AND MANAGEMENT

_____
_____ Date
Manager - Capital _____

APPROVED AS TO FORM:
ATTORNEY GENERAL
May 25, 2005
By: Alan S. Bachman
Asst Attorney General

APPROVED FOR EXPENDITURE:

_____
Division of Finance Date

PERFORMANCE BOND

(Title 63, Chapter 56, U. C. A. 1953, as Amended)

That _____ hereinafter referred to as the "Principal" and _____, a corporation organized and existing under the laws of the State of _____, with its principal office in the City of _____ and authorized to transact business in this State and U. S. Department of the Treasury Listed (Circular 570, Companies Holding Certificates of Authority as Acceptable Securities on Federal Bonds and as Acceptable Reinsuring Companies); hereinafter referred to as the "Surety," are held and firmly bound unto the State of Utah, hereinafter referred to as the "Obligee, " in the amount of _____ _____ DOLLARS ($_____) for the payment whereof, the said Principal and Surety bind themselves and their heirs, administrators, executors, successors and assigns, jointly and severally, firmly by these presents.

WHEREAS, the Principal has entered into a certain written Contract with the Obligee, dated the _____ day of _____, 20____, to construct _____ in the County of _____, State of Utah, Project No. _____, for the approximate sum of _____ _____ Dollars ($_____), which Contract is hereby incorporated by reference herein.

NOW, THEREFORE, the condition of this obligation is such that if the said Principal shall faithfully perform the Contract in accordance with the Contract Documents including, but not limited to, the Plans, Specifications and conditions thereof, the one year performance warranty, and the terms of the Contract as said Contract may be subject to Modifications or changes, then this obligation shall be void; otherwise it shall remain in full force and effect.

No right of action shall accrue on this bond to or for the use of any person or corporation other than the state named herein or the heirs, executors, administrators or successors of the Owner.

The parties agree that the dispute provisions provided in the Contract Documents apply and shall constitute the sole dispute procedures of the parties.

PROVIDED, HOWEVER, that this Bond is executed pursuant to the Provisions of Title 63, Chapter 56, Utah Code Annotated, 1953, as amended, and all liabilities on this Bond shall be determined in accordance with said provisions to the same extent as if it were copied at length herein.

IN WITNESS WHEREOF, the said Principal and Surety have signed and sealed this instrument this _____ day of _____, 20_____.

WITNESS OR ATTESTATION:

_____

PRINCIPAL:

_____

By: _____ (Seal)

Title: _____

WITNESS OR ATTESTATION:

_____

SURETY:

_____

By: _____

Attorney-in-Fact (Seal)

STATE OF _____)
) ss.
COUNTY OF _____)

On this _____ day of _____, 20___, personally appeared before me _____, whose identity is personally known to me or proved to me on the basis of satisfactory evidence, and who, being by me duly sworn, did say that he/she is the Attorney in-fact of the above-named Surety Company and that he/she is duly authorized to execute the same and has complied in all respects with the laws of Utah in reference to becoming sole surety upon bonds, undertakings and obligations, and that he/she acknowledged to me that as Attorney-in-fact executed the same.

Subscribed and sworn to before me this _____ day of _____, 20_____.

My commission expires: _____
Resides at: _____

_____
NOTARY PUBLIC

Agency: _____
Agent: _____
Address: _____
Phone: _____

Approved As To Form: May 25, 2005
By Alan S. Bachman, Asst Attorney General

PAYMENT BOND

(Title 63, Chapter 56, U. C. A. l953, as Amended)

KNOW ALL PERSONS BY THESE PRESENTS:

That _____ hereinafter referred to as the "Principal," and _____ _____, a corporation organized and existing under the laws of the State of _____authorized to do business in this State and U. S. Department of the Treasury Listed (Circular 570, Companies Holding Certificates of Authority as Acceptable Securities on Federal Bonds and as Acceptable Reinsuring Companies); with its principal office in the City of _____, hereinafter referred to as the "Surety," are held and firmly bound unto the State of Utah hereinafter referred to as the "Obligee," in the amount of _____ Dollars ($_____) for the payment whereof, the said Principal and Surety bind themselves and their heirs, administrators, executors, successors and assigns, jointly and severally, firmly by these presents.

WHEREAS, the Principal has entered into a certain written Contract with the Obligee, dated the _____ day of _____, 20____, to construct _____ in the County of _____, State of Utah, Project No. _____ for the approximate sum of _____ _____ Dollars ($_____), which contract is hereby incorporated by reference herein.

NOW, THEREFORE, the condition of this obligation is such that if the said Principal shall pay all claimants supplying labor or materials to Principal or Principal's Subcontractors in compliance with the provisions of Title 63, Chapter 56, of Utah Code Annotated, l953, as amended, and in the prosecution of the Work provided for in said Contract, then, this obligation shall be void; otherwise it shall remain in full force and effect.

That said Surety to this Bond, for value received, hereby stipulates and agrees that no changes, extensions of time, alterations or additions to the terms of the Contract or to the Work to be performed thereunder, or the specifications or drawings accompanying same shall in any way affect its obligation on this Bond, and does hereby waive notice of any such changes, extensions of time, alterations or additions to the terms of the Contract or to the Work or to the specifications or drawings and agrees that they shall become part of the Contract Documents.

PROVIDED, HOWEVER, that this Bond is executed pursuant to the provisions of Title 63, Chapter 56, Utah Code Annotated, 1953, as amended, and all liabilities on this Bond shall be determined in accordance with said provisions to the same extent as if it were copied at length herein.

IN WITNESS WHEREOF, the said Principal and Surety have signed and sealed this instrument this _____ day of _____, 20____.

WITNESS OR ATTESTATION:

_____

PRINCIPAL:

_____

By: _____
(Seal)

Title: _____

WITNESS OR ATTESTATION:

_____

SURETY:

_____

By: _____
Attorney-in-Fact (Seal)

STATE OF _____)
) ss.
COUNTY OF _____)

On this _____ day of _____, 20_____, personally appeared before me _____ _____, whose identity is personally known to me or proved to me on the basis of satisfactory evidence, and who, being by me duly sworn, did say that he/she is the Attorney-in-fact of the above-named Surety Company, and that he/she is duly authorized to execute the same and has complied in all respects with the laws of Utah in reference to becoming sole surety upon bonds, undertakings and obligations, and that he/she acknowledged to me that as Attorney-in-fact executed the same.

Subscribed and sworn to before me this _____ day of _____, 20_____.

My commission expires: _____
Resides at: _____

_____
NOTARY PUBLIC

Agency: _____
Agent: _____
Address: _____
Phone: _____

Approved As To Form: May 25, 2005
By Alan S. Bachman, Asst Attorney General

STATE OF UTAH - DEPARTMENT OF ADMINISTRATIVE SERVICES

Division of Facilities Construction and Management

DFCM

CHANGE ORDER #_____

CONTRACTOR:

ARCHITECT:

AGENCY OR INSTITUTION:
PROJECT NAME:
PROJECT NUMBER:
CONTRACT NUMBER:
DATE:

CONSTRUCTION CHANGE DIRECTIVE NO.	PROPOSAL REQUEST NO.	AMOUNT		DAYS	
		INCREASE	DECREASE	INCREASE	DECREASE

	Amount	Days	Date
ORIGINAL CONTRACT			
TOTAL PREVIOUS CHANGE ORDERS			
TOTAL THIS CHANGE ORDER			
ADJUSTED CONTRACT			

DFCM and Contractor agree that the terms, contract sum, scope of the Work and time specified in this Change Order shall constitute the full accord and satisfaction, and complete adjustment to the Contract and includes all direct and indirect costs and effects related to, incidental to, and/or reasonably implied from such change in the contract terms, sum, scope of the Work and time.

Contractor:_____
Date

Architect/Engineer:_____
Date

Agency or Institution:_____
Date

DFCM: _____
Date

Funding Verification:_____
Date

Page _____ of _____page(s)

STATE OF UTAH - DEPARTMENT OF ADMINISTRATIVE SERVICES

Division of Facilities Construction and Management

DFCM

CERTIFICATE OF SUBSTANTIAL COMPLETION

PROJECT _____ PROJECT NO: _____

AGENCY/INSTITUTION _____

AREA ACCEPTED _____

The Work performed under the subject Contract has been reviewed on this date and found to be Substantially Completed as defined in the General Conditions; including that the construction is sufficiently completed in accordance with the Contract Documents, as modified by any change orders agreed to by the parties, so that the State of Utah can occupy the Project or specified area of the Project for the use for which it is intended.

The DFCM - (Owner) accepts the Project or specified area of the Project as Substantially Complete and will assume full possession of the Project or specified area of the Project at _____ (time) on _____ (date).

The DFCM accepts the Project for occupancy and agrees to assume full responsibility for maintenance and operation, including utilities and insurance, of the Project subject to the itemized responsibilities and/or exceptions noted below:

_____

_____

The Owner acknowledges receipt of the following closeout and transition materials:

☐ Record Drawings ☐ O & M Manuals ☐ Warranty Documents ☐ Completion of Training Requirements

A list of items to be completed or corrected (Punch List) is attached hereto. The failure to include an item on it does not alter the responsibility of the Contractor to complete all the Work in accordance with the Contract Documents, including authorized changes thereof. The amount of_____. (Twice the value of the punch list work) shall be retained to assure the completion of the punch list work.

The Contractor shall complete or correct the Work on the list of (Punch List) items appended hereto within _____ ____calendar days from the above date of issuance of this Certificate. If the list of items is not completed within the time allotted the Owner has the right to be compensated for the delays and/or complete the work with the help of independent contractor at the expense of the retained project funds. If the retained project funds are insufficient to cover the delay/completion damages, the Owner shall be promptly reimbursed for the balance of the funds needed to compensate the Owner.

_____ by: _____
CONTRACTOR (include name of firm) (Signature) DATE

_____ by: _____
A/E (include name of firm) (Signature) DATE

_____ by: _____
USING INSTITUTION OR AGENCY (Signature) DATE

_____ by: _____
DFCM (Owner) (Signature) DATE

4110 State Office Building, Salt Lake City, Utah 84114
telephone 801-538-3018 • facsimile 801-538-3267 • http://dfcm.utah.gov

cc: Parties Noted
DFCM, Director

Project Manual
Detail Manual

Project Number 0619
DFCM PROJECT # 06017640

Dixie State College of Utah

Auto Trades Building Re-roof

225 South 700 East, St George, Utah 84770

August 27, 2006

State of Utah–Department of Administrative Services

DIVISION OF FACILITIES CONSTRUCTION
AND MANAGEMENT

4110 State Office Building/Salt Lake City, Utah 84114/538–3018

Axis Architects

INDEX TO PROJECT MANUAL

DIVISION AND SECTION	TITLE
DIVISION 0	BIDDING AND CONTRACT REQUIREMENTS
	General Conditions
	Supplementary General Conditions
DIVISION 1	GENERAL REQUIREMENTS
Section 01010	Summary of Work
Section 01090	Definitions and Standards
Section 01250	Contract Modification Procedures
Section 01290	Payment Procedures
Section 01310	Project Management and Coordination
Section 01320	Construction Progress Documentation
Section 01330	Submittal Procedures
Section 01500	Temporary Facilities and Controls
Section 01600	Product Requirements
Section 01700	Execution Requirements
Section 01770	Closeout Procedures
DIVISION 2 thru DIVISION 5	
Not Used	
DIVISION 6	WOOD AND PLASTIC
Section 06105	Miscellaneous Carpentry
DIVISION 7	THERMAL AND MOISTURE PROTECTION
Section 07540	Thermoplastic Membrane Roofing
Section 07591	Membrane Reroofing Preparation
Section 07620	Sheet Metal Flashing and Trim
Section 07720	Roof Accessories
DIVISION 8	DOORS AND WINDOWS
Section 08620	Unit Skylights
DIVISION 9	FINISHES

Section 09900 Painting

DIVISION 10 THRU DIVISION 14

Not Used

DIVISION 15 MECHANICAL

Section 15600 Plumbing General Requirements
Section 15610 Summary of Work for Plumbing
Section 15623 Storm Drainage System
Section 15641 Domestic Water System
Section 15661 Fuel Gas System
Section 15770 Snow Melting Equipment

DIVISION 16 ELECTRICAL

Section 16010 General Provisions
Section 16100 Basic Materials and Methods
Section 16110 Conduit
Section 16120 Conductors

END OF INDEX TO PROJECT MANUAL

SECTION 00410 - BID FORM

TO: DFCM

PROJECTS: Dixie State College of Utah

Auto Trades Building Re-roof

NAME OF BIDDER: _____ **Phone** _____

DATE: _____

Gentlemen:

The undersigned, in compliance with this RFP, having examined the Drawings and Specifications and related documents and the site of the proposed work and being familiar with all of the conditions surrounding the construction of the proposed project, including the availability of labor, hereby propose to furnish all labor, materials and supplies as required for the Project in accordance with the Contract Documents as specified and within the time set forth and at the price stated below. This price is to cover all expenses incurred in performing the work required under the Contract Documents of which this proposal is a part.

ADDENDA:

I/We acknowledge receipt of the following addenda: ___/___/___/___

BID BOND: (For Project Grand Total)

Enclosed is _____, as required, in the sum of _____.
(Bond or Certified Funds)

BASE BID:

Auto Trades Building Re-roof:
Re-roofing: For Work of the subcontract listed above and shown on the drawings and described in the Project Manual including insurance, I/We agree to perform for the sum of:

_____ Dollars ($_____)
(In the case of discrepancy, written amount shall govern)

Auto Trades Building Re-roof:
Re-roofing: For Work of the subcontract listed above and shown on the drawings and described in the Project Manual including insurance, I/We agree to perform for the sum of:

_____ Dollars ($_____)
(In the case of discrepancy, written amount shall govern)

SAVINGS:

Cost to be deducted from combined base bid amount (Project Grand Total) if I/we are awarded a construction contract for Auto Trades Building Re-roof project.

_____ Dollars ($_____)
(In case of discrepancy, written amount shall govern)

UNIT PRICES:

ITEM	DESCRIPTION	UNIT	UNIT COST
1.	Roof Drains	Each	$_____
2.	2” x 4” Wood Nailers	Per Lineal Foot	$_____
3.	2” x 6” Wood Nailers	Per Lineal Foot	$_____
4.	2” x 8” Wood Nailers	Per Lineal Foot	$_____
5.	2” x 12” Wood Nailers	Per Lineal Foot	$_____
6.	Expansion Joint Cover	Per Lineal Foot	$_____
7.	Roof Drain Ring and Cover	Each	$_____
8.	Plywood Sheathing	Per Square Foot	$_____
9.	2” Insulation	Per Square Foot	$_____
10.	Asbestos Removal	Per Cubic Foot	$_____
11.	Unit Skylight	Each	$_____

COMPLETION DATE:

I/We guarantee to complete the work within 90 calendar days, after receipt of a Notice to Proceed should I/We be the successful bidder.

This bid shall remain good for 45 days after bid opening.

Bidder=s are required to submit to the DFCM a copy of their State of Utah Contractor=s License, including a statement of licensure limits. If bidder has requested an increase of monetary licensure limits, a copy of the request must be attached to the RFP at the time the RFP is submitted to the DFCM.

BONDS:

Upon receipt of notice of acceptance of this RFP, the undersigned agrees to execute the contract within five (5) days and deliver Performance and Payment Bond in the prescribed form in the amount of 100% of the general construction contract price for faithful performance of the contract. The certified check, cashier's check or Bid Bond attached, in the amount not less than five percent (5%) of the above bid sum, shall become the property of the <OWNER> in the event that the contract is not negotiated and/or the Performance and Payment Bond delivered within the time set forth, as liquidated damages for the delay and additional expense caused thereby.

SUBSTITUTIONS:

The following substitutions of materials and/or equipment are proposed:

Item	Manufacturer and Description	Addition	Deduction
_____	_____	$_____	$_____
_____	_____	$_____	$_____
_____	_____	$_____	$_____

Type of Organization:

(Corporation, Partnership, Individual, etc.)

SEAL (If a Corporation)

Respectfully Submitted,

_____
Name of Bidder

_____

_____
Authorized Signature

GENERAL CONDITIONS

May 25, 2005

Table of Contents

ARTICLE 1. GENERAL PROVISIONS.
1.1 Basic Definitions.

ARTICLE 2. DFCM.
2.1 Information and Services Required of the DFCM.
2.1.1 DFCM's Representative.
2.1.2 Specialists and Inspectors.
2.1.3 Surveys and Legal Description.
2.1.4 Prompt Information and Services.
2.1.5 Copies of Drawings and Project Manuals (For Construction).
2.1.6 Other Duties.
2.2 Construction By DFCM or By Separate Contractors
2.2.1 DFCM's Right To Perform Construction and to Award Separate Contracts.
(1) In General.
(2) Coordination and Revisions.
2.2.2 Mutual Responsibility.
(1) Contractor Coordination.
(2) Reporting Problems to DFCM.
(3) Costs.
(4) Contractor Remedial Work.

ARTICLE 3. A/E
3.1 A/E's Administration of the Contract.
3.1.1 In General.
3.1.2 Site Visits.
3.1.3 Communications Facilitating Contract Administration.
3.1.4 A/E May Reject Work, Order Inspection, Tests.
3.1.5 A/E Review Contractor's Submittals.
3.2 Ownership and Use of A/E's Drawings, Specifications and Other Documents.

ARTICLE 4. CONTRACTOR
4.1 Review of Contract Documents and Field Conditions By Contractor.
4.1.1 Reviewing Contract Documents, Information, Reporting Errors, Inconsistencies or Omissions.
4.1.2 Field Conditions.
4.1.3 Perform in Accordance with Contract Documents and Submittals.
4.1.4 Performance to Produce the Complete System and Intended Results.
4.1.5 Intent and Hierarchy.
4.1.6 Dividing Work and Contractor Representation.
4.1.7 Planning and Priority.
4.2 Supervision and Construction Procedures.
4.2.1 Supervision and Control.
4.2.2 Responsibility.
4.2.3 Not Relieved of Obligations.
4.2.4 Inspections and Approvals.
4.3 Labor and Materials.
4.3.1 Payment by Contractor.
4.3.2 Discipline and Competence.
4.4 Taxes and Other Payments to Government.
4.5 Permits, Fees, Notices, Labor and Materials.
4.5.1 Permits and Fees.
4.5.2 Compliance With Public Authorities, Notices.
4.5.3 Correlation of Contract Documents and Enactments.

4.5.4 Failure to Give Notice.
4.6 Superintendent.
4.7 Time and Contractor's Construction Schedules.
4.7.1 Progress and Completion.
(1) Time Is of the Essence; Complete Within Contract Time.
(2) Notice to Proceed and Insurance.
4.7.2 Schedule Preparation.
4.7.3 Initial Contract Time.
4.7.4 Interim Completion Dates and Milestones.
4.7.5 Schedule Content Requirements.
4.7.6 DFCM's Right to Take Exceptions.
4.7.7 Float Time.
4.7.8 Initial Schedule Submission.
4.7.9 Updates.
4.7.10 Schedule of Submittals.
4.7.11 Schedule Recovery.
4.7.12 Schedule Changes and Modifications.
(1) Contract Time Change Requires Modification.
(2) Contractor Reordering, Resequencing and Changing Activity Durations.
(3) Changes In Contract Time.
4.7.13 Excusable Delay.
(1) In General.
(2) Weather-Related Excusable Delays.
4.7.14 Compensable Delay, Suspension or Interruption.
(1) Basic Conditions.
(2) Compensable Delay Formula.
(3) Period of Compensable Delay, Suspension or Interruption
(4) Concurrent Delay.
4.7.15 Time Extension Requests.
4.7.16 Liquidated Damages.
(1) In General.
(2) No Waiver of DFCM's Rights.
4.8 Documents and Samples at the Site, Certifying "As-Builts".
4.9 Shop Drawings, Product Data and Samples.
4.9.1 Not Contract Documents.
4.9.2 Promptness.
4.9.3 Not Perform Until A/E Approves.
4.9.4 Representations by Contractor.
4.9.5 Contractor's Liability.
4.9.6 Direct Specific Attention to Revisions.
4.9.7 Informational Submittals.
4.9.8 Reliance on Professional Certification.
4.10 Use of Site.
4.10.1 In General.
4.10.2 Access to Neighboring Properties.
4.11 Access to Work.
4.12 Royalties and Patents.
4.13 Indemnification.
4.13.1 In General.

ARTICLE 5. SUBCONTRACTORS.
5.1 Award of Subcontracts and Other Contracts For Portions of the Work.
5.1.1 Approval Required.
5.1.2 Business and Licensing Requirements.
5.1.3 Subsequent Changes.
5.1.4 Bonding of Subcontractors.
5.2 Subcontractual Relations.
5.2.1 Comply With Contract Documents.
5.2.2 Rights.
5.2.3 Sub-Subcontractors.
5.2.4 Document Copies.
5.3 Contingent Assignment of Subcontracts.
5.3.1 Conditions for Assignment to DFCM.

ARTICLE 6. PROTECTION OF PERSONS AND PROPERTY.
6.1 Safety of Persons and Property.
6.1.1 Contractor Responsibility.
6.1.2 Safety Program, Precautions.
6.1.3 Compliance With Laws.
6.1.4 Erect and Maintain Safeguards.
6.1.5 Utmost Care.
6.1.6 Prompt Remedy.
6.1.7 Safety Designee.
6.1.8 Load Safety.
6.1.9 Off-Site Responsibility.
6.1.10 Emergencies.
6.2 Hazardous Materials.
6.3 Historical and Archeological Considerations.
6.4 Contractor Liability.

ARTICLE 7. MODIFICATIONS, REQUEST FOR INFORMATION, PROPOSED CHANGE ORDER, PRELIMINARY RESOLUTION EFFORTS AND CLAIMS PROCESS.
7.1 Modifications: In General.
7.1.1 Types of Modifications and Limitations.
7.1.2 By Whom Issued.
7.1.3 Contractor to Proceed Unless Otherwise Stated.
7.1.4 Adjusting Unit Prices.

7.1.5 Special Notices Required In Order to Be Eligible For Any Contract Modification.
(1) Concealed or Unknown Conditions.
(2) Increase in Contract Time.
7.2 Contractor Initiated Requests.
7.2.1 The Request for Information, RFI, Process and Time to File.
7.2.2 Proposed Change Order ("PCO").
7.3 Proposal Request Initiated by DFCM.
7.3.1 If Agreement, Change Order Issued.
7.3.2 If Disagreement.
7.4 Evaluation of Proposal For Issuing Change Orders.
7.4.1 Adjusting Sum Based Upon Agreement.
7.4.2 DFCM Resolution of Sum and Standards in the Absence of an Agreement Under Paragraph 7.4.1.
7.4.3 Credits.
7.5 Construction Change Directives.
7.5.1 When Used and Contractor's Right to Challenge.
7.5.2 Proceed With Work and Notify DFCM About Adjustment Method.
7.5.3 Interim Payments by DFCM.
7.6 A/E's Supplemental Instruction
7.7 Procedure For Preliminary Resolution Efforts.
7.7.1 Request For Preliminary Resolution Effort (Pre).
7.7.2 Time For Filing.
7.7.3 Content Requirement.
7.7.4 Supplementation.
7.7.5 Subcontractors.
7.7.6 Pre Resolution Procedure.
7.7.7 Contractor Required to Continue Performance.
7.7.8 Decision.
7.7.9 Decision Final Unless Claim Submitted.
7.7.10 Extension Requires Mutual Agreement.
7.7.11 If Decision Not Issued.
7.7.12 Payment for Performance.
7.8 Resolution of Claim.
7.8.1 Claim.
7.8.2 Subcontractors.
7.8.3 Time for Filing.
7.8.4 Content Requirement.
7.8.5 Extension of Time to Submit Documentation.
7.8.6 Contractor Required to Continue Performance.
7.8.7 Agreement of Claimant on Method and Person(s) Evaluating the Claim.
7.8.8 The Evaluation Process,
7.8.9 Timeframes of Evaluator(s), Director's Determination, Administrative Appeal to the Executive Director and Judicial Review.
7.8.9 Appeal Process Prerequisite for Further Consideration or Judicial Review.
7.9 Payment of Claim.
7.10 Allocation of Costs of Claim Resolution Process.
7.11 Alternative Procedures.
7.12 Impact on Future Selections.
7.13 Report to Building Board.
7.14 DFCM's Right to Have Issues, Disputes or Claims Considered

ARTICLE 8. PAYMENTS AND COMPLETION.
8.1 Schedule of Values.
8.2 Applications for Payment.
8.2.1 In General.
8.2.2 Payment for Material and Equipment.
8.2.3 Warranty of Title.
8.2.4 Holdback by DFCM.
8.3 Certificates for Payment.
8.3.1 Issued by A/E.
8.3.2 A/E's Representations.
8.4 Decisions to Withhold Certification.
8.4.1 When Withheld.
8.4.2 Certification Issued When Reasons For Withholding Removed.
8.4.3 Continue Work Even if Contractor Disputes A/E's Determination.
8.4.4 DFCM Not in Breach.
8.5 Progress Payments.
8.5.1 In General, Interest on Late Payments.
8.5.2 Contractor and Subcontractor Responsibility.
8.5.3 Information Furnished by A/E or DFCM to Subcontractor.
8.5.4 DFCM and A/E Not Liable.
8.5.5 Certificate, Payment or Use Not Acceptance of Improper Work.
8.6 Payment Upon Substantial Completion.
8.7 Partial Occupancy or Use.
8.7.1 In General.
8.7.2 Inspection.
8.7.3 Not Constitute Acceptance.
8.8 Final Payment.
8.8.1 Certificate for Payment.
8.8.2 Conditions for Final Payment.
8.8.3 Waiver of Claims: Final Payment.
8.8.4 Delays Not Contractor's Fault.
8.8.5 Waiver by Accepting Final Payment.

ARTICLE 9. TESTS AND INSPECTIONS, SUBSTANTIAL AND FINAL COMPLETION, UNCOVERING, CORRECTION OF WORK AND GUARANTY PERIOD.
9.1 Tests and Inspections.
9.1.1 In General.
9.1.2 Failure of an Inspector to Appear.
9.1.3 Nonconforming Work.
9.1.4 Certificates.
9.1.5 A/E Observing.
9.1.6 Promptness.
9.2 Inspections: Substantial and Final.
9.2.1 Substantial Completion Inspection.
9.2.2 Final Completion Inspection.
9.3 Uncovering of Work.
9.3.1 Uncover Uninspected Work.
9.3.2 Observation Prior to Covering.
9.3.3 When an Inspector Fails to Appear or A/E or DFCM Did Not Make Prior Request.
9.4 Correction of Work and Guaranty Period.
9.4.1 Contractor Correct the Work.
9.4.2 Guaranty and Correction After Substantial Completion.
9.4.3 Removal of Work.
9.4.4 Not Limit Other Obligations.
9.5 Additional Warranties.
9.5.1 In General.
9.5.2 Exclusion.
9.5.3 Furnish Evidence on Request.
9.6 Acceptance of Nonconforming Work.

ARTICLE 10. INSURANCE AND BONDS.
10.1 Liability Insurance.
10.1.1 In General.
10.1.2 Configurations.
10.1.3 Contractor Liability.
10.1.4 Certificate, Notice Requirements, Additional Insured.
10.1.5 Deductible Liability.
10.1.6 Additional Requirements:
10.2 "Builder's Risk" Property Insurance.
10.2.1 In General.
10.2.2 Inspections, Recommendations.
10.2.3 Deductible.
10.2.4 Adjusted With and Payable to Risk Manager as Trustee.
10.2.5 Waiver.
10.2.6 Special Hazards.
10.3 Performance Bond and Payment Bond.

ARTICLE 11. MISCELLANEOUS PROVISIONS.
11.1 A/E's Responsibilities.
11.2 Successors and Assigns.
11.3 Written Notice.
11.3.1 Personal Delivery and Registered or Certified Mail.
11.3.2 Fax.
11.4 Rights and Remedies.
11.4.1 Not Limit.
11.4.2 Not Waiver.
11.5 Commencement of Statutory Limitation Period.
11.5.1 Before Substantial Completion.
12.5.2 Between Substantial Completion and Final Certification for Payment.
11.5.3 After Final Certification for Payment.
11.5.4 Exception.
11.6 Not Discriminate, No Sexual Harassment.
11.7 Applicable Laws.
11.8 Interpretation.
11.9 Venue.
11.10 Severability.
11.11 Construction of Words.
11.12 No Third Party Rights.

ARTICLE 12. TERMINATION OR SUSPENSION OF THE CONTRACT.
12.1 Termination by Contractor.
12.1.1 In General.
12.1.2 Notice.
12.2 Termination by the DFCM for Cause.
12.2.1 In General.
12.2.2 DFCM's Right to Carry Out the Work.
12.2.3 Items Required to Be Transferred or Delivered.
12.2.4 Payment.
12.2.5 DFCM Protection if Lienable.
12.2.6 Credits and Deficits.
12.2.7 If Contractor Found Not in Default or Excusable.
12.2.8 Rights and Remedies Not Exclusive.
12.3 Suspension, Delay or Interruption of Work by the DFCM for Convenience.
12.3.1 By DFCM in Writing.
12.3.2 Time Period for Claims.
12.3.3 Adjustments.
12.4 Termination for Convenience of the DFCM.
12.4.1 In General.
12.4.2 Contractor Obligations.
12.4.3 Termination Claim.
12.4.4 Agreed Upon Payment.
12.4.5 Payment Not Agreed Upon.
12.4.6 Deductions.
12.4.7 Partial Termination.
12.4.8 Partial Payments.
12.4.9 Preserve and Make Available Records.
12.5 DFCM's Right to Stop the Work.

GENERAL CONDITIONS

May 25, 2005

ARTICLE 1. GENERAL PROVISIONS.

1.1 BASIC DEFINITIONS.

A/E (including all design professionals). "A/E" means the person lawfully licensed to practice architecture or engineering or an entity lawfully practicing architecture or engineering identified as such in the A/E's Agreement and is referred to throughout the Contract Documents as if singular in number. The term "A/E" also means the A/E's representative and its subconsultants. When these General Conditions are part of a Contract in which the design professional is an interior designer, landscape subconsultant or other design professional, the term "A/E" as used in these General Conditions shall be deemed to refer to such design professional. A license is not required when the type of design professional is one which is not subject to a professional license, but such professional must meet the prevailing standards in the State of Utah for such practice. For projects where there is no A/E hired by DFCM, the references in the General Conditions to A/E shall be deemed to refer to DFCM as may be practicably applied.

ADDENDA. "Addenda" means the written or graphic instruments issued prior to the opening of Bids which clarify, correct or change the bidding documents or the Contract Documents.

ASI. "ASI" shall mean a Supplemental Instruction issued by the A/E to the Contractor which may result in clarifications or minor changes in the Work and does not affect the contract time or the contract amount.

BID. "Bid" means the offer or proposal of the bidder submitted on the prescribed form setting forth the prices for the Work to be performed.

BONDS. "Bonds" mean the bid bond, performance and payment bonds and other instruments of security.

CHANGE ORDER. "Change Order" means a written instrument signed by the DFCM and Contractor, stating their agreement for changes of the Contract as specified on the required DFCM's change order form.

CLAIM. "Claim" means a dispute, demand, assertion or other matter submitted by the Contractor, including a Subcontractor at any tier subject to the provisions of these General Conditions. The claimant may seek, as a matter of right, modification, adjustment or interpretation of Contract terms, payment of money, extension of time or other relief with respect to the terms of the Contract. A request for Preliminary Resolution Effort (PRE) shall not be considered a "Claim." A requested amendment, requested change order, or a Construction Change Directive (CCD) is not a PRE or Claim unless agreement cannot be reached and the procedures of these General Conditions are followed.

CONSTRUCTION CHANGE DIRECTIVE. A "Construction Change Directive" means a written order signed by the DFCM, directing a change in the Work and stating a proposed basis for adjustment, if any, in the Contract Sum or Contract Time, or both. The DFCM may by Construction Change Directive, without

invalidating the Contract, order changes in the Work within the general scope of the Contract consisting of additions, deletions or other revisions; even if it may impact the Contract Sum and Contract Time.

CONTRACT. The Contract Documents form the Contract for Construction. The term "Contract" represents the entire and integrated agreement between the parties hereto and supersedes prior negotiations, representations or agreements, either written or oral. The Contract Documents shall not be construed to create a contractual relationship of any kind (1) between the A/E and Contractor, (2) between the DFCM and a Subcontractor or (3) between any persons or entities other than the DFCM and Contractor.

CONTRACT DOCUMENTS. The term "Contract Documents" means the Contractor's Agreement between the DFCM and Contractor (hereinafter referred to as "Contractor's Agreement"), the Conditions of the Contract (General, Supplementary and other Conditions), the Drawings, Specifications, Addenda, other documents listed in the Contractor's Agreement and Modifications issued after execution of the Contractor's Agreement. The Contract Documents shall also include the bidding/proposal documents, including the Instructions to Bidders/Proposers, Notice to Contractors and the Bid/Proposal Form, to the extent not in conflict with the other above-stated Contract Documents and other documents and oral presentations as part of the Selection which are documented as an attachment to the Contract.

CONTRACT SUM. The term "Contract Sum" means the Contract Sum as stated in the Contractor's Agreement and, including authorized and signed adjustments to this agreement (modifications), is the total amount payable by the DFCM to the Contractor for performance of the Work under the Contract Documents.

CONTRACT TIME. "Contract Time", unless otherwise provided in the Contract Documents, means the period of time, including authorized and signed adjustments (modifications), stated in the Contract Documents for Substantial Completion of the Work.

CONTRACTOR. The Contractor is the person or entity identified as such in the DFCM Contractor's Agreement and is referred to throughout the Contract Documents as if singular in number. The term "Contractor" means the Contractor or the Contractor's authorized representative. When separate contracts are awarded for different portions of the Project or other construction or operations on the site, the term "Contractor" in the Contract Documents in each case, shall mean the Contractor who executes each separate DFCM Contractor Agreement.

CONTRACTOR'S AGREEMENT.
"Contractor's Agreement" means, unless the context requires otherwise, the agreement executed by the Contractor and DFCM for the Project.

DAY. The term "day" or "days" as used in the Contract Documents shall mean calendar day unless otherwise specifically defined.

DEFECTIVE. "Defective" is an adjective which when modifying the word "Work" refers to Work that does not conform to the Contract Documents, or does not meet the requirements of any inspection, referenced standard, code, test or approval referred to in the Contract Documents, or has been damaged.

DFCM REPRESENTATIVE.
"DFCM Representative" means the Division of Facilities Construction and Management person directly assigned to work with the Contractor on a regular basis. Unless the context requires otherwise, the "DFCM Representative" is the "Owner's Representative."

DIRECTOR. "Director" means the Director of the Division of Facilities Construction and Management unless the context requires otherwise. Director may include a designee selected by the Director for the particular function referred to in the General Conditions.

DFCM. "DFCM" means the Division of Facilities Construction and Management established pursuant to Utah Code Annotated Section 63A-5-201 et seq. Unless the context requires otherwise, DFCM is the "Owner" as that term is commonly referred to in the construction industry.

DRAWINGS. The "Drawings" are the graphic and pictorial portions of the Contract Documents, wherever located and whenever issued, showing the design, location and dimensions of the Work, and generally include the drawings, elevations, sections, details, schedules and diagrams.

EXECUTIVE DIRECTOR.
"Executive Director" means the Executive Director of the Department of Administrative Services, including unless otherwise stated, his/her duly authorized designee.

INSPECTION. The word "inspection" or its derivatives shall mean a review of the Project, including but not limited to a visual review of the Work completed to date to ascertain if the Work is in accordance with the Contract Documents, including all applicable building codes and construction standards.

MODIFICATION. A "Modification" is (1) a Change Order (2) Construction Change Directive or (3) ASI. The Contract may be amended or modified only by (1) a written amendment executed by both the DFCM and Contractor, or (2) by a Modification.

NOTICE TO PROCEED. A "Notice to Proceed" is a document prepared by the–DFCM and by its terms authorizes the Contractor to commence Work on the Project. It is deemed issued upon being sent by the DFCM to the Contractor's specified address within the bid or proposal.

PARTIAL USE. "Partial Use" means placing a portion of the Work in service for the purpose for which it is intended (or a related purpose) before reaching Substantial Completion for all the Work. This partial use does not constitute "substantial completion".

PRELIMINARY RESOLUTION EFFORT. "Preliminary Resolution Effort" or "PRE" means the processing of a request for preliminary resolution or any similar notice about a problem that could potentially lead to a Claim and is prior to reaching the status of a Claim.

PRODUCT DATA. "Product Data" means illustrations, standard schedules, performance charts, instructions, brochures, diagrams and other information furnished by the Contractor to illustrate materials or equipment for some portion of the Work.

PROJECT. The "Project" means the total construction of the Work performed under the Contract Documents.

PROJECT MANUAL (FOR CONSTRUCTION). The "Project Manual" is the volume assembled for the Work and may include the bidding/proposal requirements, sample forms, General or Supplementary Conditions of the Contract and Specifications.

PROPOSAL REQUEST OR "PR."
A "Proposal Request" or "PR" is a proposal request filed with the Contractor for the purposes of seeking a proposal in order to resolve an issue as part of the Change Order or Contract Modification process.

PROPOSED CHANGE ORDER. A "Proposed Change Order" ("PCO"), is an informal request by the Contractor filed with the DFCM Representative, in an effort to commence the Contract Modification Process. It shall not be considered a "PRE" or a "Claim." The PCO may be related to any potential, or actual delay, disruption, unforeseen condition or materials or any other matter in which the Contractor intends to seek additional monies or time.

REQUEST FOR INFORMATION or RFI. A "Request for Information" or "RFI" is a request filed by the Contractor with the A/E regarding any request for information, direction or clarification related to the Contract Documents, plans or specifications.

RESOLUTION OF THE CLAIM. "Resolution of the Claim" means the final resolution of the Claim by the Director, but does not include any administrative appeal, judicial review or judicial appeal thereafter.

RULE. "Rule," unless the context requires otherwise, shall mean a Rule of the Utah Administrative Code.

SALES TAX and/or USE TAX. Sales Tax and/or Use Tax, unless the context requires otherwise, shall mean the sales tax and/or use tax collected or to be collected by the Utah State Tax Commission and shall include any sales and/or use tax that the Utah State Tax Commission collects on behalf of any special district, local government or political subdivision.

SAMPLES. "Samples" mean physical examples, which illustrate materials, equipment or workmanship and establishes standards by which the Work will be judged.

SHOP DRAWINGS. "Shop Drawings" means drawings, diagrams, schedules and other data specially prepared for the Work by the Contractor or a Subcontractor, Sub-subcontractor, manufacturer, supplier or distributor to illustrate some portion of the Work.

SPECIFICATIONS. The "Specifications" are that portion of the Contract Documents consisting of the written requirements for materials, equipment, construction systems, standards, installation and workmanship for the Work, and performance of related systems and services.

SUBCONTRACTOR. "Subcontractor" means the person or entity that has a direct contract with the Contractor, including any trade contractor or specialty contractor, or with another Subcontractor at any tier to provide labor or materials for the work but does not include suppliers who provide only materials, equipment or supplies to a contractor or subcontractor. Notwithstanding the foregoing, the text in which the term is used may provide for the exclusion of Subcontractors of other Subcontractors or the exclusion of suppliers. The term "Subcontractor" is referred to throughout the Contract Documents as if singular in number and means a Subcontractor or authorized representative of the Subcontractor. The Term "Subcontractor" does not include a separate contractor or subcontractors of a separate contractor.

SUBSTANTIAL COMPLETION. "Substantial Completion" is the date certified in accordance with Article 9.2 and means the date the Work or designated portion thereof is sufficiently complete, and any lack of completion or performance does not reasonably interfere with the DFCM's intended use of the Project, in accordance with the Contract Documents so that the DFCM can occupy and use the Work for its intended use. DFCM's "intended use" or "occupy" as used in this definition, shall include any intended use or occupation by any agency or entity for which DFCM has intended to so occupy the Project.

SUPPLEMENTARY CONDITIONS OR SUPPLEMENTARY GENERAL CONDITIONS. "Supplementary Conditions" or "Supplementary General Conditions" means the part of the Contract Documents which amends or supplements these General Conditions.

WORK. The term "Work" means the construction and services required by the Contract Documents, whether completed or partially completed, and includes all labor, materials, equipment and services provided, or to be provided, by the Contractor to fulfill the Contractor's obligations.

ARTICLE 2. DFCM.

2.1 INFORMATION AND SERVICES REQUIRED OF THE DFCM.

2.1.1 DFCM'S REPRESENTATIVE. The DFCM shall designate a DFCM Representative authorized to act in the DFCM's behalf with respect to the Project. The DFCM or such authorized representative shall render decisions within a reasonable time pertaining to documents submitted by the A/E and/or Contractor in order to avoid a compensable delay in the orderly and sequential progress of the Project.

2.1.2 SPECIALISTS AND INSPECTORS. The DFCM will provide certified building inspection services in accordance with the adopted Building Codes. This includes 'routine' and 'special' inspections unless otherwise noted in the A/E Agreement. The DFCM may assign an inspector or specialist to note deviations from, or necessary adjustments to, the Contract Documents or to report deficiencies or defects in the Work. The inspector or specialist's activities in no way relieves the

Contractor of the responsibilities set forth in the Contract Documents.

2.1.3 SURVEYS AND LEGAL DESCRIPTION. The DFCM shall furnish surveys describing physical characteristics, legal limitations and utility locations for the site of the Project, and a legal description of the site. The Contractor shall review this information, including the surveys and any provided soils tests, and compare such information with observable physical conditions and the Contract Documents.

2.1.4 PROMPT INFORMATION AND SERVICES. Upon receipt of a written request from the Contractor, the DFCM shall furnish information or services under the DFCM's control with reasonable promptness to avoid delay in the orderly progress of the Work.

2.1.5 COPIES OF DRAWINGS AND PROJECT MANUALS (FOR CONSTRUCTION). Unless otherwise provided in the Contract Documents, the Contractor will be furnished, free of charge, such copies of Drawings and Project Manuals (for construction) as are reasonably necessary for execution of the Work. DFCM's Web Page may also provide referenced documents for the Project.

2.1.6 OTHER DUTIES. The foregoing is in addition to other duties and responsibilities of the DFCM enumerated herein and especially those in respect to Article 2.2 (Construction by DFCM or by Separate Contractors), Article 8 (Payments and Completion) and Article 10 (Insurance and Bonds).

2.2 CONSTRUCTION BY DFCM OR BY SEPARATE CONTRACTORS

2.2.1 DFCM'S RIGHT TO PERFORM CONSTRUCTION AND TO AWARD SEPARATE CONTRACTS.

(1) **IN GENERAL**. The DFCM reserves the right to perform construction or operations related to the Project with the DFCM's own forces, and to award separate contracts in connection with other portions of the Project or other construction or operations on the site under Conditions of the Contract identical or substantially similar to these including those portions related to insurance and waiver of subrogation.

(2) **COORDINATION AND REVISIONS**. The DFCM shall provide for coordination of the activities of the DFCM's own forces and of each separate Contractor with the Work of the Contractor, who shall cooperate with them. The Contractor shall participate with other separate contractors and the DFCM in reviewing their construction schedules when directed to do so. The Contractor shall make any revisions to the construction schedule and Contract Sum deemed necessary after a joint review and agreement by the DFCM. The construction schedules shall then constitute the schedules to be used by the Contractor, separate contractors and the DFCM until subsequently revised.

2.2.2 MUTUAL RESPONSIBILITY.

(1) **CONTRACTOR COORDINATION**. The Contractor shall afford the DFCM and separate contractor(s) a reasonable opportunity for delivery and storage of their materials and equipment and performance of their activities and shall connect and coordinate the Contractor's construction and operations with theirs as required by the Contract Documents.

(2) **REPORTING PROBLEMS TO DFCM**. If part of the Contractor's Work depends on work by the DFCM or a separate contractor, the Contractor shall, prior to proceeding with that portion of the Work, promptly report in writing to the DFCM apparent defects in workmanship that would render it unsuitable for proper execution. Failure of the Contractor to make said report shall constitute an acknowledgment that the DFCM's or separate contractor's completed or partially completed construction is fit and proper to receive the Contractor's Work, except as to defects in workmanship not then reasonably discoverable.

(3) **COSTS**. Costs caused by delays or by improperly timed activities or defective construction shall be borne by the responsible party in accordance with the procedures and provisions of the Contract Documents.

(4) **CONTRACTOR REMEDIAL WORK**. The Contractor shall promptly remedy damage caused by the Contractor to completed or partially completed Work or to property of the DFCM or separate contractors and subcontractors as provided in Article 6.

ARTICLE 3. A/E.

3.1 A/E'S ADMINISTRATION OF THE CONTRACT.

3.1.1 IN GENERAL. The A/E assists the DFCM with the administration of the Contract as described in the Contract Documents. The A/E shall have the authority to act on behalf of the DFCM only to the extent provided in the Contract Documents or A/E's Agreement.

3.1.2 SITE VISITS.

(1) Site visits or inspections by the A/E, the DFCM or any DFCM representative shall in no way limit or affect the Contractor's responsibility to comply with all the requirements and the overall design concept of the Contract Documents as well as all applicable laws, statutes, ordinances, resolutions, codes, rules, regulations, orders and decrees.

(2) **WRITTEN REPORT.** The A/E shall promptly submit to the DFCM a written report subsequent to each site visit.

3.1.3 COMMUNICATIONS FACILITATING CONTRACT ADMINISTRATION. Except as authorized by the DFCM Representative or as otherwise provided in the Contract Documents, including these General Conditions, the A/E and Contractor shall communicate through the DFCM Representative on issues regarding the timing of the Work, cost of the Work or scope of the Work. Contractor shall comply with communication policies agreed upon at any pre-construction meeting with the DFCM. Communications by and with the A/E subconsultants shall be through the A/E. Communications by and with Subcontractors shall be through the Contractor. Communications by and with separate contractors shall be through the DFCM.

3.1.4 A/E MAY REJECT WORK, ORDER INSPECTION, TESTS. The A/E shall have the responsibility and authority to reject Work which, based upon the A/E's knowledge or what may be reasonably inferred from the A/E's site observations and review of data, does not conform to the Contract Documents. Whenever the A/E considers it necessary or advisable for implementation of the intent of the Contract Documents, the A/E shall have the responsibility and authority to require additional inspections or testing of the Work in accordance with the provisions of the Contract Documents, whether or not such Work is fabricated, installed or completed, provided, however, the A/E must obtain the DFCM's prior written approval of any such additional inspections or testing. However, neither this authority of the A/E nor a decision made in good faith either to exercise or not to exercise such authority shall give rise to a duty or responsibility of the A/E to the Contractor, Subcontractors, their agents or employees or other persons performing portions of the Work, including separate contractors. If the Contractor disputes the rejection of any Work and the correction thereof shall involve additional cost or time, it shall be the DFCM's option to accept such Work whether it be conforming or nonconforming.

3.1.5 A/E REVIEW CONTRACTOR'S SUBMITTALS.

(1) Contractor shall submit shop drawings, product data, and samples and other submittals required by the Contract Documents to the A/E as required by the approved submittal schedule.

(2) The A/E shall review and approve or take other appropriate action upon Contractor's submittals such as Shop Drawings, Product Data and Samples, but only for the purpose of checking for conformance with the information and design concepts expressed in the Contract Documents. A/E action taken on a submittal shall not constitute a Modification of this Agreement.

(3) The A/E's action shall be taken no later than 15 days following A/E's receipt of the submittal, unless agreed to otherwise by Contractor and DFCM, in order to avoid a delay in the Work of the Contractor or of separate contractors while allowing sufficient time in the A/E's professional judgment to permit adequate review.

(4) Review of such submittals is not conducted for the purpose of determining the accuracy and completeness of other details such as dimensions and quantities or for substantiating instructions for installation or performance of equipment or systems, all of which remain the responsibility of the Contractor as required by the Contract Documents.

(5) The A/E's review of the Contractor's submittals shall not relieve the Contractor of the obligations under the Contract Documents.

(6) The A/E's review shall not constitute approval of safety precautions or, unless otherwise specifically stated by the A/E, of any construction means, methods, techniques, sequences or procedures.

(7) The A/E's approval of a specific item shall not indicate approval of an assembly of which the item is a component.

(8) When professional certification of performance characteristics of materials, systems or equipment is required by the Contract Documents, the A/E shall be entitled to rely upon such certifications to establish that the materials systems or equipment will meet the performance criteria required by the Contract Documents.

3.2 OWNERSHIP AND USE OF A/E'S DRAWINGS, SPECIFICATIONS AND OTHER DOCUMENTS. All Drawings, Specifications and other documents prepared by the A/E are and shall remain the property of the DFCM, and DFCM shall retain all common law, statutory and other reserved rights with respect thereto. Said documents were prepared and are intended for use as an integrated set for the Project which is the subject of this Contractor's Agreement. The Contractor shall not modify or use Contract Documents on any other project without the prior written consent of the DFCM and A/E. Any such non-permissive use or modification, by Contractor, the Contractor's Subcontractors at any tier or anyone for whose acts the Contractor is liable, shall be at Contractor's sole risk. Contractor shall hold harmless and indemnify the DFCM from and against any and all claims, actions, suits, costs, damages, loss, expenses and attorney fees arising out of such non-permissive use or modification by the Contractor. The Contractor and Subcontractors are granted a limited license to use and reproduce applicable portions of the Drawings, Specifications and other documents prepared by the A/E appropriate to and for use in the execution of their Work under the Contract Documents. All copies made under this license shall bear the statutory copyright notice, if any, shown on the Drawings, Specifications and other documents prepared by the A/E. Submittals or distributions necessary to meet official regulatory requirements or for other purposes relating to completion of the Project are not to be construed as a publication in derogation of the DFCM's copyright or other reserved rights.

ARTICLE 4. CONTRACTOR

4.1 REVIEW OF CONTRACT DOCUMENTS AND FIELD CONDITIONS BY CONTRACTOR.

4.1.1 REVIEWING CONTRACT DOCUMENTS, INFORMATION, REPORTING ERRORS, INCONSISTENCIES OR OMISSIONS. The Contractor shall carefully study and compare the Contract Documents with each other and with information furnished by the DFCM pursuant to Article 2.1 hereinabove and shall at once report to the DFCM and A/E errors, inconsistencies or omissions discovered. The Contractor shall not be liable to the DFCM or A/E for damage resulting from errors, inconsistencies or omission in the Contract Documents, unless the Contractor recognized such error, inconsistency or omission or a Contractor of ordinary skill and expertise for the type of Work involved would have readily so recognized such error, inconsistency or omission, and the Contractor

failed to report such to the DFCM and A/E. If the Contractor performs any construction activity without such notice to the DFCM and A/E and prior to the resolution of the error, inconsistency or omission, the Contractor shall assume appropriate responsibility for such performance and shall bear an appropriate amount of the attributable costs for correction.

4.1.2 FIELD CONDITIONS. The Contractor shall take field measurements and verify field conditions and shall carefully compare such field measurements and conditions and other information known to the Contractor, or information which a Contractor of ordinary skill and expertise for the type of Work involved would have known, before commencing activities. Errors, inconsistencies or omissions discovered shall be reported to the DFCM and A/E at once. If the Contractor performs any construction activity without such notice to the DFCM and A/E and prior to the resolution of the error, inconsistency or omission, the Contractor shall assume appropriate responsibility for such performance and shall bear an appropriate amount of the attributable costs for correction.

4.1.3 PERFORM IN ACCORDANCE WITH CONTRACT DOCUMENTS AND SUBMITTALS. The Contractor shall perform the Work in accordance with the Contract Documents and submittals approved in accordance with the Contract Documents

4.1.4 PERFORMANCE TO PRODUCE THE COMPLETE SYSTEM AND INTENDED RESULTS. Performance by the Contractor shall be required to the extent consistent with the Contract Documents and reasonably inferable from the Contract Documents as being necessary to allow the system to function within its intended use.

4.1.5 INTENT AND HIERARCHY. The Contract Documents should be read as a whole and wherever possible, the provisions should be construed in order that all provisions are operable. The intent of the Contract Documents is to include all items necessary for the proper execution and completion of the Work by the Contractor. The Contract Documents are complimentary, and what is required by one Document or provisions thereof shall be as binding as if required by all the Documents or provisions thereof. In case of an irreconcilable conflict between provisions within a Contract Document or between Contract Documents, the following priorities shall govern as listed below:

(1) A particular Modification shall govern over all Contract Document provisions or Modifications issued prior to said particular Modification.

(2) Attachments to the Contractor's Agreement resulting from the Selection process including any management plan or documented interview information shall govern over addenda, the General Conditions, plans and specifications**.**

(3) A particular Addendum shall govern over all other Contract Document provisions issued prior to said particular Addendum. Subsequent Addenda shall govern over all prior Addenda.

(4) The Supplementary General Conditions shall govern over the General Conditions.

(5) These General Conditions shall govern over all other Contract Documents except for the Supplementary General Conditions, Addenda, Modifications and Attachments resulting from the selection process.

(6) The drawings and specifications shall not govern over any of the documents listed above.

(7) In case of a conflict or ambiguity within the same level of hierarchy of described documents, DFCM reserves the right to select the most stringent requirement unless the preponderance of the contract indicates the less stringent requirement.

4.1.6 DIVIDING WORK AND CONTRACTOR REPRESENTATION. Organization of the specifications into divisions, sections and articles, and arrangement of Drawings, shall not control the Contractor in

dividing the Work among Subcontractors or in establishing the extent of Work to be performed by any trade. Contractor represents that the Subcontractors, Sub-subcontractors, manufacturers and suppliers engaged or to be engaged by it are and will be familiar with the requirements for performance by them of their obligations.

4.1.7 PLANNING AND PRIORITY. The Contractor shall plan and schedule its work to facilitate the Project and shall maintain a work schedule to place proper priority to sequence work to complete the project timely.

4.2 SUPERVISION AND CONSTRUCTION PROCEDURES.

4.2.1 SUPERVISION AND CONTROL. The Contractor shall supervise and direct the Work, using the Contractor's best skill and attention. The Contractor shall be solely responsible for and have control over the construction means, methods, techniques, sequences and procedures and for coordinating all portions of the Work under the Contract, except to the extent that the Contract Documents expressly and specifically state otherwise.

4.2.2 RESPONSIBILITY. The Contractor shall be responsible to the State of Utah and DFCM for acts and omissions of the Contractor's employees, Subcontractors, and their agents and employees, and other persons performing portions of the Work under a contract with the Contractor or on behalf of the Contractor.

4.2.3 NOT RELIEVED OF OBLIGATIONS. The Contractor shall not be relieved of obligations to perform the Work in accordance with the Contract Documents either by activities or duties of the DFCM or its agents in the DFCM's administration of the Contract, or by tests, inspections or approvals required or performed by persons other than the Contractor or for those that the Contractor is liable.

4.2.4 INSPECTIONS AND APPROVALS.

(1) The Contractor is responsible for requesting inspections for various stages and portions of the Work required under the Contract Documents in a timely manner.

(2) If any of the Work is required to be inspected or approved by the terms of the Contract Documents by any public authority, the Contractor shall timely request such inspection or approval to be performed in accordance with Article 9. Except as provided in Article 9, work shall not proceed without any required inspection and the associated authorization to proceed. Contractor shall promptly notify DFCM if the inspector fails to appear at the site.

4.3 LABOR AND MATERIALS.

4.3.1 PAYMENT BY CONTRACTOR. Except to the extent it is otherwise stated in the Contract Documents, the Contractor shall provide and pay for labor, materials, equipments, tools, construction equipment and machinery, water, heat, utilities, transportation, and other facilities, supplies, consumables and services necessary for the proper execution and completion of the Work, whether temporary or permanent and whether or not incorporated or to be incorporated in the Work.

4.3.2 DISCIPLINE AND COMPETENCE. The Contractor shall enforce strict discipline and good order among the Contractor's employees, its Subcontractors, agents, representatives and other persons performing under the Contract Documents. The Contractor shall not permit employment of unfit persons or persons not skilled in tasks assigned to them.

4.4 TAXES AND OTHER PAYMENTS TO GOVERNMENT. The Contractor shall pay sales, consumer, use, employment-related and similar taxes related to the Work or portions thereof provided by the Contractor which are legally enacted when bids are received or negotiations concluded, whether or not yet effective or merely scheduled to go into effect. The Contractor shall comply with the laws and regulations regarding the payment of Sales and/or Use Tax and any exemptions. The procurement documents may have a provision regarding specific items which are exempt from State of Utah Sales Tax and/or Use Tax. Any such

exemption shall be used only for the items and the project specified in the procurement documents. Any such exemption does not apply to taxes levied by the federal government or any taxing entity outside of the State of Utah. If a Contractor properly relies upon a provision(s) of the bidding or proposal documents, and if State of Utah Sales and/or Use Tax subsequently becomes due, then the Contractor shall be paid such tax amount not included in the bid/proposal amount due to the reliance upon such provision.

4.5 PERMITS, FEES, NOTICES, LABOR AND MATERIALS.

4.5.1 PERMITS AND FEES. Unless required in the Supplementary General Conditions or an Addendum, it will not be necessary for the Contractor to obtain or pay for local building permits, plan check fees, electrical permits, plumbing permits, connection fees, or impact fees, nor will it be necessary to pay fees for inspections pertaining thereto.

4.5.2 COMPLIANCE WITH PUBLIC AUTHORITIES, NOTICES. The Contractor shall comply with and give notices required by laws, ordinances, resolutions, rules, regulations and lawful orders of public authorities bearing on the performance of the Work.

4.5.3 CORRELATION OF CONTRACT DOCUMENTS AND ENACTMENTS. It is not the Contractor's responsibility to ascertain that the Contract Documents are in accordance with applicable laws, statutes, ordinances, resolutions, building codes, and rules and regulations. Notwithstanding this, if the Contractor observes, or if such is readily observable to a Contractor of ordinary skill and expertise for the type of Work involved, that a portion of the Contract Documents is at variance therewith, the Contractor shall promptly notify the A/E and DFCM in writing, and necessary changes shall be accomplished by appropriate Modification.

4.5.4 FAILURE TO GIVE NOTICE. If the Contractor, or any Subcontractor thereof performs Work without complying with the requirements of this Article 4.5 hereinabove, the Contractor shall assume appropriate responsibility for such Work and shall bear the appropriate amount of the attributable costs.

4.6 SUPERINTENDENT. The Contractor shall employ a competent superintendent and necessary assistants who shall be in attendance at the Project site during performance of the Work. The superintendent shall represent the Contractor, and communications given to the superintendent shall be as binding as if given to the Contractor. Important communications shall be confirmed in writing. Other communications shall be similarly confirmed on written request in each case.

4.7 TIME AND CONTRACTOR'S CONSTRUCTION SCHEDULES.

4.7.1 PROGRESS AND COMPLETION.

(1) **TIME IS OF THE ESSENCE; COMPLETE WITHIN CONTRACT TIME**. Time is of the essence. By executing the Contractor's Agreement, the Contractor confirms that the Contract Time is adequate to perform the Work. The Contractor shall proceed expeditiously with adequate forces to achieve Substantial Completion within the Contract Time.

(2) **NOTICE TO PROCEED AND INSURANCE**. The Contractor shall not prematurely commence operations on the site or elsewhere prior to the issuance of a Notice to Proceed by the DFCM or prior to the effective date of insurance required by Article 10 to be furnished by the Contractor, whichever is the latter.

4.7.2 SCHEDULE PREPARATION. The Contractor, promptly after being awarded the Contract, shall prepare and submit for the DFCM's and A/E's review, a reasonably detailed CPM schedule for the Work. The schedule shall indicate the order, sequence, and interdependence of all items known to be necessary to complete the Work including construction, procurement, fabrication, and delivery of materials and equipment, submittals and approvals of samples, shop drawings, procedures, or other documents. Work items of the DFCM, other Contractors, utilities and other third parties that may affect or

be affected by the Contractor shall be included. If the DFCM is required, by the Contract Documents, to furnish any materials, equipment, or the like, to be incorporated into the Work by the Contractor, Contractor shall submit, with the first schedule submittal, a letter clearly indicating the dates that such items are required at the Project Site. The critical path should be identified, including the critical paths for interim completion dates and milestones. The CPM schedule shall be developed using Primavera, MS Project, or Suretrack unless otherwise authorized by the DFCM Representative. The Contractor's schedule shall be updated at least once a month and submitted with each pay request.

4.7.3 INITIAL CONTRACT TIME. Unless otherwise specified in the bidding documents, the initial Contract Time is the time identified in the Contractor's Agreement.

4.7.4 INTERIM COMPLETION DATES AND MILESTONES. The schedule must include contractually specified interim completion dates and milestones. The milestone completion dates indicated are considered essential to the satisfactory performance of this Contract and to the coordination of all Work on the Project. The milestone dates listed are not intended to be a complete listing of all Work under this Contract or of interfaces with other Project Contractors.

4.7.5 SCHEDULE CONTENT REQUIREMENTS. The schedule shall indicate an early completion date for the Project that is no later than the Project's required completion date. The schedule, including all activity duration's shall be given in calendar days. The Schedule shall also indicate all of the following:

(1) Interfaces with the work of outside contractors (e.g., utilities, power and with any separate Contractor);

(2) Description of activity including activity number/numbers;

(3) Estimated duration time for each activity;

(4) Early start, late start, early finish, late finish date, and predecessor/successors including stop-start relationships with lead and lag time for each activity;

(5) Float available to each path of activities;

(6) Actual start date for each activity begun;

(7) Actual finish date for each activity completed;

(8) The percentage complete of each activity in progress or completed;

(9) Identification of all critical path activities;

(10) The critical path for the Project, with said path of activities being clearly and easily recognizable on the time-scaled network diagram. The path(s) with the least amount of float must be identified. Unless otherwise authorized by the DFCM Representative, no more than 40% of all activities may be identified as critical path items. The relationship between non-critical activities and activities on the critical path shall be clearly shown on the network diagram;

(11) Unless otherwise authorized by the DFCM Representative, all activities on the schedule representing construction on the site may not have a duration longer than 14 days. Construction items that require more than 14 days to complete must be broken into identifiable activities on the schedule with durations less than 14 days. The sum of these activities represents the total length required to complete that construction item; and

(12) Additional requirements as specified in the Supplemental General Conditions.

4.7.6 DFCM'S RIGHT TO TAKE EXCEPTIONS. The DFCM reserves the right to take reasonable exception to activity duration, activity placement, construction logic or time frame for any element of the Work to be scheduled.

4.7.7 FLOAT TIME. Float or slack time is defined as the amount of time between the earliest start date and the latest start date or between the earliest finish date and the latest finish date of a chain of activities on the Schedule. By a proposal request or modification delivered to the Contractor, the DFCM has the right to use the float time for non-critical path activities until the Contractor has reallocated such time on a newly submitted schedule.

4.7.8 INITIAL SCHEDULE SUBMISSION. No progress payments will be approved until the Contractor has submitted a Project detailed CPM schedule covering the first 90 days of the Work with a general CPM schedule for the entire project. The detailed schedule for the entire project is to be completed prior to the second pay request unless otherwise authorized in writing by the DFCM Representative.

4.7.9 UPDATES. Prior to any approval of a pay request, the DFCM, A/E and Contractor shall review the Contractor's schedule compared to the Work completed. The DFCM approves the amount of Work completed as supported by the schedule of values and as verified by the determination of Work completed. If necessary, the Contractor shall then update and submit to the DFCM the schedule with the pay request; all of which in accordance with the DFCM's approval. All updates shall be provided in electronic and hard copy formats. At each scheduled meeting with the DFCM Representative, the Contractor shall provide a "three week look ahead" with long lead items identified.

4.7.10 SCHEDULE OF SUBMITTALS. The Contractor shall prepare and keep current, for the A/E's and DFCM's review, a schedule of submittals required under the Contract Documents which is coordinated with the Contractor's construction schedule and allows the A/E a reasonable time to review the submittals. This submittal schedule is to be included as part of the construction schedule. Submittals requiring expedited review must be clearly identified as such in the schedule of submittals.

4.7.11 SCHEDULE RECOVERY. If the Work represented by the critical path falls behind more than 7 days, the project schedule shall be redone within 14 days showing how the Contractor shall recover the time. A narrative that addresses the changes in the schedule from the previously submitted schedule shall be submitted along with the schedule in both hard copy (appropriate report formats to be determined by the–DFCM Representative) and electronic copy. The Contractor shall comply with the most recent schedules.

4.7.12 SCHEDULE CHANGES AND MODIFICATIONS.

(1) **CONTRACT TIME CHANGE REQUIRES MODIFICATION**. The Contract Time may only be shortened or extended by a written modification fully executed by the DFCM.

(2) **CONTRACTOR REORDERING, RESEQUENCING AND CHANGING ACTIVITY DURATIONS.** Should the Contractor, after approval of the complete detailed construction schedule, desire to change his plan of construction, he shall submit his requested revisions to the DFCM and the A/E along with a written statement of the revisions including a description of the sequence and duration changes for rescheduling the work, methods of maintaining adherence to intermediate milestones and the contract completion date and the reasons for the revisions. If the requested changes are acceptable to the DFCM, which acceptance shall not be unreasonably withheld, they will be incorporated into the Schedule in the next reporting period. If after submitting a request for change in the Contract Schedule, the DFCM does not agree with the request, the DFCM will schedule a meeting with the Contractor to discuss the differences.

(3) **CHANGES IN CONTRACT TIME**. The critical path schedule as the term is used in the provisions herein shall be based on the current version of the Contractor's schedule for the Project and accepted by the DFCM just prior to the commencement of the modification, asserted delay, suspension or interruption. If the Contractor believes it is entitled to an extension of Contract Time under the Contract Documents, the Contractor shall submit a

PCO in accordance with Article 7.2 to the A/E and the DFCM Representative accompanied by an analysis ("Requested Time Adjustment Schedule") in accordance with the Contract Documents for time extensions. The "Requested Time Adjustment Schedule" shall include "fragnets" that represent the added or changed work to the Schedule. The impact on unchanged activities caused by the changes and/or delays being analyzed shall be included in these fragnets.

A "fragnet" as used in these General Conditions and when used in the context of project scheduling is a subset of project activities that are inter-related by predecessor and successor relationships that are tied into the main schedule with identified start and completion points. Each fragnet may or may not be on the critical path. An entire schedule consists of a series of inter-related fragnets.

4.7.13 EXCUSABLE DELAY.

(1) **IN GENERAL**. If the Contractor is delayed at any time in the progress of the Work on the critical path schedule by an act or neglect of the DFCM or other causes beyond the Contractor's control or by other causes which the DFCM determines may justify delay, then the Contract Time shall be extended by Change Order. The Contractor shall immediately take all steps reasonably possible to lessen the adverse impact of such delay. Notwithstanding the above, to the extent any of the causes for delay were caused by the Contractor, reasonably foreseeable by the Contractor or avoidable by the Contractor, then to such extent the delay shall not be cause for extension of the Contract Time. For purposes of this paragraph, Contractors shall include all subcontractors and others under the responsibility of the Contractor.

The determination of the total number of days extension will be based upon the current construction schedule in effect at the inception of the change and/or delay and upon all data relevant to the extension as it exists in the project record. Once approved, such data shall be incorporated in the next monthly update of the schedule.

Contractor acknowledges and agrees that delays in work items which, according to the schedule analysis, do not affect any milestone dates or the Contract completion dates shown on the CPM at the time of the delay, will not be the basis for a contract extension.

(2) **WEATHER-RELATED EXCUSABLE DELAYS**. Completion time will not be extended for normal bad weather or any weather that is reasonably foreseeable at the time of entering into the contract. The time for completion as stated in the contract documents includes due allowance for calendar days on which Work cannot be performed out of doors. The Contractor acknowledges that it may lose days due to weather conditions. Contract time may be extended at no cost to the DFCM if all of the following are met which must be established by the Contractor:

(a) That the weather prevented Work from occurring that is on the critical path for the project based upon a critical path schedule previously submitted to the DFCM and to the extent accepted by the DFCM;

(b) There are no concurrent delays attributed to the Contractor;

(c) The Contractor took all reasonable steps to alleviate the impact of the weather and took reasonable attempts to prevent the delay and despite such reasonable actions of Contractor, the weather impacted the critical path as described above; and

(d) One of the following occurred:

1. The weather was catastrophic, such as a tornado, hurricane, severe wind storm, severe hail storm; or

2. Based on the full history of information published from the closest station as indicated from the Western Regional Climate Center (Desert Research Institute 2215 Raggio Parkway Reno, Nevada 89512, and as may be described on the website at http://www.wrcc.dri.edu/summary/), one or more of the following occurred:

a. For any day between November 1 and March 31, the

minimum temperature fell below the average minimum temperature plus the extreme low temperature recorded for the month divided by 2.

b. For any day between November 1 and March 31, the maximum temperature fell below the monthly average for the minimum temperature.

c. The daily precipitation exceeded 75% of the historical one day maximum for the month.

d. The snowfall for the month exceeded 175% of the historical average snow fall for the month.

4.7.14 COMPENSABLE DELAY, SUSPENSION OR INTERRUPTION.

(1) **BASIC CONDITIONS**. In addition to the other requirements of the Contract Documents, a compensable delay, suspension or interruption of the work occurs only when the following are met:

(a) Is wholly unanticipated by the parties at the time of execution of the Contractor's Agreement or is caused by the breach of a fundamental obligation of the Contract Documents attributable to the DFCM; and

(b) The Contractor delivers a written notice to A/E and DFCM within seven (7) days that the Contractor knows or should have known of the condition giving rise to the purported compensable delay, disruption, suspension or interruption, and said continuation affects the Contract Time as indicated by the last submitted and reasonable critical path schedule.

(2) **COMPENSABLE DELAY FORMULA**. To the extent of the compensable delay, the Contractor's total entitlement for all compensable delay damages is the computed result of the following formula: Contract Sum divided by Contract Time (in calendar days); the result of which is then multiplied by 0.05; and the result of which is multiplied by the number of calendar days of compensable days allowed under these General Conditions that are beyond the Contract Time. Notwithstanding any other provision of these General Conditions or the Contract Documents, to the extent the Contractor is entitled to receive the 10% or 15% markup under Article 7.4, this provision shall be inapplicable and the markup shall be deemed to include all the compensable delay damages provided by this paragraph.

(3) **PERIOD OF COMPENSABLE DELAY, SUSPENSION OR INTERRUPTION**. The length and extent of compensable delay, shall be determined, with the use of the Project's critical path schedule, by ascertaining the number of additional days to the Contract Time that are needed in order to perform the Work in accordance with the Contract Documents as a result of the continuation of the aforesaid delay, disruption, suspension or interruption after receipt of the written notice received by the A/E and DFCM under Section 4.7.14(1)(b) above.

(4) **CONCURRENT DELAY**. Notwithstanding any other provision of these General Conditions, to the extent a non-compensable delay occurs at the same time as a compensable delay, the DFCM shall not be responsible for any compensation for the period of the non-compensable delay.

4.7.15 TIME EXTENSION REQUESTS. Any time extension shall be requested within 21 days after the Contractor knew or should have known about the delay and shall be supported by the critical path schedule analysis.

4.7.16 LIQUIDATED DAMAGES.

(1) **IN GENERAL**. Should the Contractor fail to complete the Work within the Contract Time, there shall be deducted from any amount due or that may become due the Contractor, the sum as stated in the Contractor's Agreement. Such sum is fixed and agreed upon by the DFCM and Contractor as liquidated damages due the DFCM by reason of the inconvenience and added costs of administration, engineering, supervision and other costs resulting from the Contractor's default, and not as a penalty. Actual damages related to delay can not be ascertained at

the time of execution of the Contract. To the extent that the liquidated damages exceed any amounts that would otherwise be due the Contractor, the Contractor shall be liable for such excess to the DFCM. DFCM may seek enforcement of such obligation by legal action, and if such is necessary, shall recover the related costs and attorney fees. Notwithstanding any other provision of these General Conditions, the availability of liquidated damages to the DFCM shall not limit the DFCM's right to seek damages or other remedies available under law or equity to the extent such damages or remedies are not based upon delay.

(2) **NO WAIVER OF DFCM'S RIGHTS**. Permitting the Contractor to continue any part of the Work after the time fixed for completion or beyond any authorized extension thereof, shall in no way operate as a waiver or estoppel on the part of the DFCM of any of its rights under the Contract Documents, including the right to liquidated damages or any other remedies or compensation.

4.8 DOCUMENTS AND SAMPLES AT THE SITE, CERTIFYING "AS-BUILTS". The Contractor shall maintain at the site for the DFCM, one record copy of the Drawings, Specifications, Addenda, Change Orders and other Modifications, in good order and marked weekly to record changes and selections made during construction, as well as approved Shop Drawings, Product Data, Samples and similar submittals. These aforesaid items shall be available to the A/E and shall be delivered to the A/E for submittal to the DFCM upon completion of the Work, signed by the Contractor, certifying that they show complete and exact "as-built" conditions, stating sizes, kind of materials, vital piping, conduit locations and similar matters. All notes of encountered or changed conditions shall be included.

4.9 SHOP DRAWINGS, PRODUCT DATA AND SAMPLES.

4.9.1 NOT CONTRACT DOCUMENTS. Shop Drawings, Product Data, Samples and similar submittals are not Contract Documents. The submittal shall demonstrate, for those portions of the Work for which the submittal is required, the way the Contractor proposes to conform to the information given and the design concept expressed in the Contract Documents.

4.9.2 PROMPTNESS. The Contractor shall review, approve and submit to the A/E, Shop Drawings, Product Data, Samples and similar submittals required by the Contract Documents with reasonable promptness and in such sequence as to cause no delay in the Work, or the activities of the DFCM or separate contractors.

4.9.3 NOT PERFORM UNTIL A/E APPROVES. The Contractor shall perform no portion of the Work requiring submittal and review of Shop Drawings, Product Data, Samples or similar submittals until the respective submittal has been approved in writing by the A/E. Such Work shall be in accordance with the approved submittals.

4.9.4 REPRESENTATIONS BY CONTRACTOR. By approving and submitting Shop Drawings, Product Data, Samples and similar submittals, the Contractor represents that the Contractor has determined and verified materials, field measurements and field construction criteria related thereto, and has checked and coordinated the information contained within such submittals with the requirements of the Work and of the Contract Documents.

4.9.5 CONTRACTOR'S LIABILITY. The Contractor shall not be relieved of responsibility for deviations from the requirements of the Contract Documents by the A/E's approval of Shop Drawings, Product Data, Samples or similar submittals unless the Contractor has specifically informed the A/E in writing of such deviation at the time of the submittal and the A/E has given written approval to the specific deviation. The Contractor shall not be relieved of responsibility for errors or omissions in Shop Drawings, Product Data, Samples or similar submittals by the A/E's review and comment.

4.9.6 DIRECT SPECIFIC ATTENTION TO REVISIONS. The Contractor shall direct specific attention in writing to all revisions on resubmitted Shop Drawings, Product Data, Samples or similar submittals, except those

requested by the A/E and indicated on previous submittals.

4.9.7 INFORMATIONAL SUBMITTALS. Informational submittals upon which the A/E is not expected to take responsive action may be so identified in the Contract Documents.

4.9.8 RELIANCE ON PROFESSIONAL CERTIFICATION. When professional certification of performance criteria of materials, systems or equipment is required by the Contract Documents, the DFCM and A/E shall be entitled to rely upon the accuracy and completeness of such calculations and certifications. If a professional stamp is required, the professional shall be licensed in the State of Utah unless otherwise approved by the DFCM in writing. Likewise, the Contractor is entitled to rely upon the accuracy and completeness of the calculations made by the A/E in developing the Contract Documents, unless a Contractor of ordinary skill and expertise for the type of Work involved would know that such is inaccurate or incomplete and therefore must immediately notify the DFCM in writing.

4.10 USE OF SITE.

4.10.1 IN GENERAL. The Contractor shall confine operations at the site to areas permitted by the Contract Documents, law, ordinances, resolutions, rules and regulations, and permits and shall not unreasonably encumber the site with materials or equipment. Contractor shall take all reasonable means to secure the site, protect the site and protect the Work from any damage. The site shall be left free and clear of refuse, equipment, materials, etc. and the site shall not be subject to spilled liquids and chemicals, toxic or otherwise. Should such an incident occur while the Contractor has control of the site, the Contractor shall be responsible to clean the site and pay all associated costs, fines and penalties. Notwithstanding this, Contractor is not responsible for any damage to the site or the Work to the extent caused by the DFCM or the DFCM's agents.

4.10.2 ACCESS TO NEIGHBORING PROPERTIES. The Contractor shall not, except as provided in the Contract Documents or with the DFCM's advance written consent when necessary to perform the Work, interfere with access to properties neighboring the Project site by the owners of such properties and their respective tenants, agents, invitees and guests.

4.11 ACCESS TO WORK. The Contractor shall provide the DFCM and A/E access to the Work in preparation and progress, wherever located.

4.12 ROYALTIES AND PATENTS. The Contractor shall pay all royalties and license fees. The Contractor shall defend suits or claims for infringement of patent rights and shall hold the DFCM and A/E harmless from loss on account thereof, but shall not be responsible for such defense or loss when a particular design, process or product of a particular manufacturer or manufacturers is required by the Contract Documents. However, if the Contractor has reason to believe that the required design, process or product is an infringement of a patent, the Contractor shall be responsible for such loss unless such information is promptly furnished to the DFCM in writing.

4.13 INDEMNIFICATION.

4.13.1 IN GENERAL.

(1) To the fullest extent permitted by law, the Contractor shall indemnify and hold harmless the State of Utah, the State of Utah's institutions, agencies, departments, divisions, authorities, and instrumentalities, boards, commissions, elected or appointed officers, employees, agents, authorized volunteers (hereinafter the above listing of entities and persons is referred to an "indemnities") from and against every kind and character of claims, damages, losses and expenses, including but not limited to attorneys' fees, and including those events covered under the blanket Contractual Liability Coverage required under the Contract Documents, arising out of or resulting from any act or omission in the performance of the Work including the work of all the Subcontractors and their employees, provided that any such claim, damage, loss or expense is caused in whole or in part by the negligent or wrongful act or omission

of the Contractor, any Subcontractor, and their employees, provided that any such claim, damage loss or expense is caused in whole or in part by the negligent or intentional act or omission of the Contractor, any Subcontractor, or anyone directly or indirectly employed or the agent of any of them or anyone for whose acts any of them may be liable, regardless of whether or not it is caused in part by a party indemnified hereunder. The Contractor shall defend all actions brought upon such matters to be indemnified hereunder and pay all costs and expenses incidental thereto, but the State of Utah shall have the right, at its option, to participate in the defense of any such action without relieving the Contractor of any obligation hereunder. Notwithstanding any of the above, to the extent the Contractor is complying with a written directive from the DFCM, that is not based on the Contractor's recommendation, the Contractor shall not be held liable under the indemnification provision of this Agreement if the Contractor has promptly disagreed with the written directive by delivering such objection to the DFCM in writing.

(2) Such obligation shall not be construed to negate, abridge, or otherwise reduce any other right or obligation of indemnity which would otherwise exist as to any party or person under Contract Documents.

(3) In claims against any person or entity indemnified under this Article 4.13 by an employee of the Contractor, Subcontractor, anyone directly or indirectly employed by them or anyone for whose acts they may be liable, the indemnification obligation under this Article 3.13 shall not be limited by a limitation on amount or type of damages, compensation or benefits payable by or for the Contractor or Subcontractor under workers' or workmen's compensation acts, disability benefits acts or other employee benefit acts.

ARTICLE 5. SUBCONTRACTORS.

5.1 AWARD OF SUBCONTRACTS AND OTHER CONTRACTS FOR PORTIONS OF THE WORK.

5.1.1 APPROVAL REQUIRED.

(1) Listing of Subcontractors shall be as required by U.C.A. 63A-5-208 as amended and/or as stated in the Contract Documents, including but not limited to the "DFCM Subcontractors List Form".

(2) The Contractor shall not contract with a proposed person or entity to whom the DFCM has made a reasonable and timely objection. The Contractor shall not be required to contract with anyone to whom the Contractor has made reasonable objection.

5.1.2 BUSINESS AND LICENSING REQUIREMENTS. All Subcontractors used by the Contractor shall comply with all applicable business and licensing requirements.

5.1.3 SUBSEQUENT CHANGES. After the lapse of twenty-four (24) hours from the bid opening, the Contractor may change its listed Subcontractors only in accordance with Rule R 23-1 and the Contract Documents and with written approval of the Director of the Division of Facilities Construction and Management.

(1) DFCM will pay the additional costs for a DFCM requested change in subcontractor if all of the following are met:

(a) If the DFCM in writing requests the change of a subcontractor;

(b) The original subcontractor is a responsible subcontractor that meets the requirements of the Contract Documents; and

(c) The original subcontractor did not withdraw as a subcontractor on the project.

(2) In all other circumstances, the Contractor shall pay the additional cost for a change in a subcontractor.

5.1.4 BONDING OF SUBCONTRACTORS. Subcontractors as identified by DFCM in the procurement documents, may be required to submit

performance and payment bonds to cover the full extent of their portion of the Work. This provision does not in any way limit the right of the Contractor to have subcontractors at any tier be required to have a performance and/or payment bond.

5.2 SUBCONTRACTUAL RELATIONS.

5.2.1 COMPLY WITH CONTRACT DOCUMENTS. By appropriate enforceable agreement, and to the extent it can be practically applied, the Contractor shall require each Subcontractor to be bound to the Contractor by the terms of the Contract Documents, and to assume toward the Contractor all the obligations and responsibilities which the Contractor, by these Documents, assumes towards the DFCM and A/E.

5.2.2 RIGHTS. Each Subcontractor agreement shall preserve and protect the rights of the DFCM and A/E under the Contract Documents with respect to the Work to be performed by the Subcontractor so that subcontracting thereof will not prejudice such rights, and shall allow to the Subcontractor, unless specifically provided otherwise in the Subcontractor agreement, the benefit of all rights and remedies against the Contractor that the Contractor, by the Contract Documents, has against the DFCM.

5.2.3 SUB-SUBCONTRACTORS. The Contractor shall require each Subcontractor to enter into similar agreements with its Subcontractors which complies with the requirements of Paragraphs 5.2.1 and 5.2.2 hereinabove.

5.2.4 DOCUMENT COPIES. The Contractor shall make available to each proposed Subcontractor, prior to execution of the subcontract agreement, copies of the Contract Documents to which the Subcontractor will be bound. Subcontractors shall similarly make copies of applicable portions of the Contract Documents available to their respective proposed Subcontractors.

5.3 CONTINGENT ASSIGNMENT OF SUBCONTRACTS.

5.3.1 CONDITIONS FOR ASSIGNMENT TO DFCM. Each subcontract agreement for a subcontractor at any tier for a portion of the Work is assigned by the Contractor to the DFCM provided that the assignment is effective only after termination of the Contract by the DFCM for cause pursuant to Article 12.2 or stoppage of the Work by DFCM pursuant to Article 12.5, and only for those subcontract agreements which the DFCM accepts by notifying the Subcontractor in writing. The subcontract shall be equitably adjusted to meet the new conditions of the work.

ARTICLE 6. PROTECTION OF PERSONS AND PROPERTY.

6.1 SAFETY OF PERSONS AND PROPERTY.

6.1.1 CONTRACTOR RESPONSIBILITY. The Contractor shall be solely responsible for initiating, maintaining and supervising all safety precautions and programs in connection with the performance of the Contract. The Contractor shall take all reasonable precautions for the safety of, and shall provide reasonable protection to prevent damage, injury or loss to:

(1) Employees on the Work and other persons who may be affected thereby;

(2) The Work and materials and equipment to be incorporated therein, whether in storage on or off the site, under care, custody or control of the Contractor or a Subcontractor; and

(3) Other property at the site or adjacent thereto, such as trees, shrubs, lawns, walks, pavements, roadways, structures and utilities not designated for removal, relocation or replacement in the course of construction.

6.1.2 SAFETY PROGRAM, PRECAUTIONS. The Contractor shall institute a safety program at the start of construction to minimize accidents. Said program shall continue to the final completion of the Project and conform to applicable laws and regulations including the Utah Occupational Safety and Health Rules and

Regulations as published by the Utah Industrial Commission - UOSH Division. The Contractor shall post signs, erect barriers, and provide those items necessary to implement the safety program. As soon as the Contractor proceeds with the Work, the Contractor shall have all workers and all visitors on the site wear safety hard hats, as well as all other appropriate safety apparel such as safety glasses and shoes, and obey all safety rules and regulations and statutes. The Contractor shall post a sign in a conspicuous location indicating the necessity of wearing hard hats and the Contractor shall loan such hats to visitors.

6.1.3 COMPLIANCE WITH LAWS. The Contractor shall give notices and comply with applicable laws, ordinances, rules, regulations and lawful orders of public authorities bearing on safety of persons or property or their protection from damage, injury or loss. In particular, the Contractor shall comply with all applicable provisions of Federal, State and municipal safety laws, rules and regulations as well as building codes to prevent accidents or injury to persons on, about, or adjacent to the premises where the Work is being performed.

6.1.4 ERECT AND MAINTAIN SAFEGUARDS. The Contractor shall erect and maintain, as required by existing conditions and performance of the Contract, reasonable safeguards for safety and protection, including effective fences, posting danger signs and other warnings against hazards, promulgating safety regulations and notifying owners and users of adjacent sites and utilities.

6.1.5 UTMOST CARE. When use or storage of explosives or other hazardous materials or equipment or unusual methods are necessary for execution of the Work, the Contractor shall exercise utmost care and carry on such activities under supervision of properly qualified personnel.

6.1.6 PROMPT REMEDY. The Contractor shall promptly remedy damage and loss (other than damage or loss insured under property insurance required by the Contract Documents) to property referred to in Paragraph 6.1.1 of these General Conditions caused in whole or in part by the Contractor, a Subcontractor, or anyone directly or indirectly employed by any of them, or by anyone for whose acts they may be liable and for which the Contractor is responsible under said Paragraph 6.1.1, except to the extent such damage or loss is directly due to errors in the Contract Documents or caused by agents or employees of the A/E or DFCM. The foregoing obligations of the Contractor are in addition to the Contractor's obligations under the Contract Documents.

6.1.7 SAFETY DESIGNEE. The Contractor shall designate a responsible member of the Contractor's organization at the site whose duty shall be the prevention of accidents, damage, injury or loss. This person shall be the Contractor's superintendent unless otherwise designated by the Contractor in writing to the DFCM and A/E.

6.1.8 LOAD SAFETY.
The Contractor shall not load or permit any part of the construction or site to be loaded so as to endanger its safety.

6.1.9 OFF-SITE RESPONSIBILITY. In addition to its other obligations under this Article 6, the Contractor shall, at its sole cost and expense, promptly repair any damage or disturbance to walls, utilities, streets, ways, sidewalks, curbs and the property of the State and third parties (including municipalities and other governmental agencies) resulting from the performance of the Work, whether by it or by its Subcontractors at any tier. The Contractor shall not cause materials, including soil and debris, to be placed or left on streets or ways.

6.1.10 EMERGENCIES.
In an emergency affecting safety of persons or property, the Contractor shall act, at the Contractor's discretion, to prevent threatened damage, injury or loss. Contractor shall promptly notify the DFCM Representative of the action taken.

6.2 HAZARDOUS MATERIALS. In the event the Contractor encounters on the site material reasonably believed to be asbestos or polychlorinated biphenyl (PCB) or any other hazardous waste or substance which may endanger the health of those persons performing the Work or being on the site**,** the Contractor shall immediately stop Work in the area affected and

immediately report the condition to the DFCM Representative and A/E by phone with a follow-up document in writing. The Work in the affected area shall be resumed when written direction is provided by the DFCM Representative. Except to the extent provided otherwise in the Contract Documents or if the presence of hazardous materials is due to the fault of the Contractor, the Contractor shall not be required to perform without the Contractor's consent, any Work relating to asbestos, polychlorinated biphenyl (PCB) or any other hazardous waste or substance.

DFCM shall procure a licensed abatement contractor qualified to remove the hazardous material. The abatement contractor shall submit notification of demolition to the Utah Division of Air Quality. Abatement contractor shall pay the notification fee. A copy of the hazardous material survey report shall be available to all persons who have access to the construction site.

6.3 HISTORICAL AND ARCHEOLOGICAL CONSIDERATIONS. In the event the Contractor knows or should have known of any cultural, historical or archeological material that is either recognized as an item to be protected under Federal, State, or local law or regulation, or is an item of obvious value to the State of Utah, the Contractor shall cease any work that would interfere with such discovery and immediately report the condition to the DFCM Representative and A/E by phone with a follow-up document in writing. Work shall resume based upon the direction of the DFCM Representative. Contractor cooperation with any DFCM recognized archaeologist or other cultural/historical expert is required.

6.4 CONTRACTOR LIABILITY. If the Contractor fails in any of its obligations in Articles 6.1 through 6.3 above, the Contractor shall be liable to any damages to DFCM, the State of Utah or any third party resulting from such noncompliance. The Contractor shall also be liable for any mitigation or restoration effort resulting from such noncompliance. To the extent all the following is met, the Contractor may treat the discovery of such material similarly to an unforeseen condition:

6.4.1 The discovery of such material is reasonably unforeseeable given the site conditions that the Contractor should have been aware;

6.4.2 The presence of such material was not identified in any part of the Contract Documents;

6.4.3 The Contractor has undertaken all proper action to mitigate any impact of such discovery on the critical path or monies related to the Project;

6.4.4 The discovery affects the critical path or contract price from that which was contemplated by the Contract Documents; and

6.4.5 The requirements of 7.1.5 and the Contract documents are met.

ARTICLE 7. MODIFICATIONS, REQUEST FOR INFORMATION, PROPOSED CHANGE ORDER, PRELIMINARY RESOLUTION EFFORTS AND CLAIMS PROCESS.

7.1 MODIFICATIONS: IN GENERAL.

7.1.1 TYPES OF MODIFICATIONS AND LIMITATIONS. Changes in the Work may be accomplished after execution of the Contract, and without invalidating the Contract, by Change Order, Construction Change Directive or ASI, subject to the limitations stated in this Article 7 and elsewhere in the Contract Documents. The Contractor must have a written Modification executed by DFCM under this Article 7 prior to proceeding with any Work sought to be an extra.

7.1.2 BY WHOM ISSUED. A Change Order or Construction Change Directive shall be issued by the DFCM Representative. An ASI is issued by the A/E or by the DFCM Representative.

The A/E shall prepare Change Orders and Construction Change Directives with specific documentation and data for the DFCM's approval and execution in accordance with the Contract Documents, and may issue ASIs not involving an adjustment in the contract sum or an extension of the Contract Time which are not

inconsistent with the intent of the Contract Documents.

7.1.3 CONTRACTOR TO PROCEED UNLESS OTHERWISE STATED. Changes in the Work shall be performed under applicable provisions of the Contract Documents, and the Contractor shall proceed promptly, unless otherwise provided in the Change Order, Construction Change Directive or ASI.

7.1.4 ADJUSTING UNIT PRICES. If unit prices are stated in the Contract Documents or subsequently agreed upon, and if quantities originally contemplated are so changed in a proposed Change Order or Construction Change Directive that application of such unit prices to quantities of Work proposed will cause a substantial inequity to the DFCM or Contractor, the applicable unit prices may be equitably adjusted.

7.1.5 SPECIAL NOTICES REQUIRED IN ORDER TO BE ELIGIBLE FOR ANY CONTRACT MODIFICATION. In order to be eligible for any Modification under this Article 7, the Contractor must have met the following special notice requirements:

(1) **CONCEALED OR UNKNOWN CONDITIONS**. The Contractor must file a written notice with the DFCM Representative within seven (7) calendar days of that the Contractor knew or should have known of a site condition described below or the Contractor shall be deemed to waive any right to file any PCO, PRE or Claim for additional monies or time related to such condition:

(a) If the Contractor encounters unknown and reasonably unforeseeable subsurface or otherwise concealed physical conditions, including hazardous or historical/cultural materials under Article 6, which differ materially from those indicated by the Contract Documents or a site inspection; or

(b) If the Contractor encounters unknown physical conditions of an unusual nature which differ materially from those ordinarily found to exist and generally recognized as inherent in construction activities of the character provided for in the Contract Documents.

(2) **INCREASE IN CONTRACT TIME**. If the Contractor encounters a situation in which the Contractor knows or should have known that such situation would cause a delay, disruption, interruption, suspension or the like to the Project, the Contractor must file a notice with the DFCM Representative within seven (7) working days of when the Contractor knew or should have known of such circumstance or the Contractor shall be deemed to waive any right to file any PCO, PRE or Claim for additional monies or time related to such circumstance. To the extent the DFCM and/or the State of Utah is damaged by the failure of the Contractor to provide such notice after the Contractor knows or should have known of such circumstance, the Contractor shall be liable for liquidated damages attributable thereto, as well as any damages to the State of Utah and/or DFCM that are allowable in addition to liquidated damages.

7.2 CONTRACTOR INITIATED REQUESTS.

7.2.1 THE REQUEST FOR INFORMATION, RFI, PROCESS AND TIME TO FILE. The Contractor may file an RFI with the A/E regarding any concern which will assist the Contractor in the proper completion of the Work including, but not limited to issues related to the Contract Documents, plans and specifications. The RFI shall be filed with the A/E in a timely manner so as not to prejudice the DFCM as to the quality, time or money related to the Work.

7.2.2 PROPOSED CHANGE ORDER ("PCO"). Within twenty-one (21) days after the Contractor knows or should have known of a situation or concern where the Contractor is going to request additional monies or time, the Contractor must file a Proposed Change Order ("PCO") with the DFCM Representative, or the Contractor shall be deemed to waive any right to claim additional monies or time related to such situation or concern. The PCO shall include all available documentation supporting the PCO available to the Contractor at the time of filing and the Contractor shall thereafter diligently pursue the

supplementation(s) of such documentation and promptly deliver such supplementation(s) to the DFCM Representative.

(1) **DFCM REPRESENTATIVE RESPONSE.** One of the following may occur after a PCO is filed with the DFCM Representative:

(a) The DFCM Representative, after considering any input by the A/E, may reach an agreement with the Contractor and issue a Change Order.

(b) The DFCM, after considering any input by the A/E, may issue a Construction Change Directive.

(c) If the DFCM Representative, after considering any input by the A/E, disagrees with the Contractor's PCO, the DFCM representative may seek additional information or verification from the Contractor, the A/E or other sources, may negotiate with the Contractor, may issue a Change Order upon such later agreement, may retract the PR, or may issue a Construction Change Directive.

(d) If a Construction Change Directive is issued which identifies the DFCM Representative's position in regard to the subject contract sum and/or time adjustment or if the PCO is denied by the DFCM Representative, the Contractor must file a PRE under Article 7.7 below no later than twenty-one (21) days after the Contractor's receipt of the Construction Change Directive or such denial of the PCO. Failure to file a PRE in these instances shall be deemed to waive any right to additional time or money related to the PCO, Construction Change Directive or denial of the PCO. Such waiver shall entitle the DFCM to convert the Construction Change Directive into a Change Order, whether or not executed by the Contractor.

If the Construction Change Directive leaves open the determination of additional time or money related to the directed change, then the time period for commencement of filing the PRE shall not accrue until such time as the DFCM has conveyed to the Contractor a position as to the time and money owing as a result of the directed change.

The A/E must continually work with the DFCM in providing data, documentation and efforts to resolve the issues related to the PR.

7.3 PROPOSAL REQUEST INITIATED BY DFCM. DFCM may file a Proposal Request with the Contractor seeking information, data and/or pricing relating to a change in the contract time and or monies owing for particular scope changes or other modifications to the Contract Documents. The PR shall provide a time limit for the Contractor to file a response with the A/E and the DFCM Representative. If a proposal is not timely provided by the Contractor, DFCM may calculate the Change Order under Article 7.4.2 below. Upon such timely receipt of the proposal, one of the following shall occur:

7.3.1 IF AGREEMENT, CHANGE ORDER ISSUED. The DFCM Representative, after considering any input by the A/E, may reach an agreement with the Contractor and issue a Change Order.

7.3.2 IF DISAGREEMENT. If the DFCM Representative disagrees with the Contractor's proposal, after considering any input from the A/E, the DFCM representative may seek additional information or verification from the Contractor or other sources, may negotiate with the Contractor, may issue a Change Order upon such later agreement, may retract the PR, or may issue a Construction Change Directive. If a Construction Change Directive is issued which identifies the DFCM representative's position in regard to the subject contract sum and/or time adjustment, the Contractor must file a PRE within twenty-one (21) days of the Contractor's receipt of the Construction Change Directive, or the Contractor shall be deemed to waive any such request for additional time or money as a result of the issuance of the Construction Change Directive. Such waiver shall entitle the DFCM to convert the Construction Change Directive into a Change Order, whether or not executed by the Contractor. If the Construction Change Directive leaves open the determination of additional time or money related to the directed change, then the time period for commencement of filing the PRE shall not accrue until such time as the DFCM has conveyed

to the Contractor a position as to the time and money owing as a result of the directed change.

7.4 EVALUATION OF PROPOSAL FOR ISSUING CHANGE ORDERS.

7.4.1 ADJUSTING SUM BASED UPON AGREEMENT. If the Change Order provides for an adjustment to the Contract Sum, the adjustment shall be based on the mutual agreement of the Contractor and DFCM, including any terms mandated by unit price agreements or other terms of the Contract Documents.

7.4.2 DFCM RESOLUTION OF SUM AND STANDARDS IN THE ABSENCE OF AN AGREEMENT UNDER PARAGRAPH 7.4.1. In the absence of an agreement under Paragraph 7.4.1 above, the adjustment shall be based on an itemized accounting of costs and savings supported by appropriate data. Unless otherwise provided in the Contract Documents, costs for the purposes of this Paragraph shall be limited to the following:

(1) All direct and indirect costs of labor; including workers compensation insurance, social security and other federal and state payroll based taxes, and payroll based fringe benefits paid by Contractor so long as they are reasonable and no higher than that charged to other clients;

(2) Costs of materials, on-site temporary facilities, supplies and equipment (except hand tools) required for or incorporated into the work;

(3) Rental costs of machinery, equipment, tools (except hand tools), and on-site temporary facilities, whether rented from the Contractor or others;

(4) Costs of permits and other fees, sales, use or similar taxes related to the Work;

(5) Additional costs of field supervision and field office personnel directly attributable to the change; and

(6) Overhead and profit by the following liquidated formula which is not a penalty but a reasonable calculation agreed upon at the time of execution of the Contractor's Agreement, and provided by formula herein due to the fact that the actual amount due for said overhead and profit cannot easily be ascertained at the time of such execution. The markups in 7.4.2(6)(a) and (b) below are to cover the Contractor's additional payment and performance bond premiums, insurance premiums not specified under Paragraph 7.4.2(1), home office and on-site overhead and profit. Overhead and profit includes, but is not limited to the Contractor's Project Manager and Cost Estimator. Each request for pricing shall stand on its own and not be combined with other requests for pricing in determining the allowed markup described below. A particular request for pricing shall include all items reasonably related together and determinable at the time of the request. If several unrelated requests for pricing are grouped together in a single Change Order, each request for pricing will be considered separately for purposes of calculating the markup under the following formula:

(a) A markup of 15% shall be applied to the cost of each individual charge up to $20,000 in cost, but in no case shall the markup be less than $150;

(b) A markup of 10% shall be applied to the portion of the cost of each individual charge in excess of $20,000;

(c) Subcontractors at any tier shall be entitled to markup their costs related to a Change Order with the same percentages as specified in Paragraphs 7.4.2(6)(a) and (b) above, except that the minimum markup shall be $50 for any individual change.

7.4.3 CREDITS. The amount of credit to be allowed by the Contractor to the DFCM for a deletion or change which results in a net decrease in the Contract Sum shall be actual net cost as confirmed to DFCM based upon corroboration by an appropriate source.

7.5 CONSTRUCTION CHANGE DIRECTIVES.

7.5.1 WHEN USED AND CONTRACTOR'S RIGHT TO CHALLENGE. A Construction Change Directive may be issued by the DFCM Representative in the case of a need for the Work to commence. If the Construction Change Directive leaves open the determination of additional time or money related to the directed change, then the Construction Change Directive shall indicate the timeframe(s) in which further information is to be provided to resolve the matter. At any time that the DFCM and the Contractor agree upon the time and money related to a Construction Change Directive, a Change Order shall be executed by the parties. Additionally, the Construction Change Directive may be converted to a Change Order under Paragraph 7.2.2 or Article 7.3 above.

7.5.2 PROCEED WITH WORK AND NOTIFY DFCM ABOUT ADJUSTMENT METHOD. Upon receipt of a Construction Change Directive, the Contractor shall promptly proceed with the change in the Work involved.

7.5.3 INTERIM PAYMENTS BY DFCM. Pending the final determination of the total cost of the Construction Change Directive, DFCM shall pay any undisputed amount to the Contractor.

7.6 A/E'S SUPPLEMENTAL INSTRUCTION (Commonly referred to as an "ASI"). The A/E may at any time that is consistent with maintaining the quality, safety, time, budget and function of the Work, issue to the Contractor a supplemental instruction ("ASI") after approval from the DFCM Representative is obtained. The Contractor must file with the DFCM Representative a PCO under Paragraph 7.2.2 above, within 21 calendar days of the Contractor's receipt of the ASI, or the Contactor shall be deemed to have waived any right to additional time or monies as a result of such ASI.

7.7 PROCEDURE FOR PRELIMINARY RESOLUTION EFFORTS.

7.7.1 REQUEST FOR PRELIMINARY RESOLUTION EFFORT (PRE). A Contractor raising an issue related to a breach of contract or an issue concerning time or money shall file a PRE as a prerequisite for any consideration of the issue by the DFCM. The labeling of the notice or request shall not preclude the consideration of the issue by the DFCM.

7.7.2 TIME FOR FILING. The PRE must be filed in writing with the DFCM Representative within twenty-one (21) days of any of the following:

(1) Issuance of a Construction Change Directive that defines the time and sum due the Contractor but the Contractor disagrees with such assessment;

(2) Issuance of DFCM's position in regard to a Construction Change Directive that originally left open the time and/or sum due to the Contractor;

(3) Issuance of a denial of a PCO by DFCM;

(4) In the case of a Subcontractor, after the expiration of the time period for the Contractor/Subcontractor PRE process under Paragraph 7.7.5 below; or

(5) When the Contractor knows or should have known about any other issue where the Contractor seeks additional monies, time or other relief from the State of Utah or DFCM.

7.7.3 CONTENT REQUIREMENT. The PRE shall be required to include in writing to the extent information is reasonably available at the time of such filing:

(1) A description of the issue;

(2) The potential impact on cost and time or other breach of contract; and

(3) An indication of the relief sought.

7.7.4 SUPPLEMENTATION. Additional detail of the content requirement under Paragraph 7.7.3 above shall be provided later if the detail is not yet available at the initial filing as follows:

(1) While the issue is continuing or the impact is being determined, the Contractor shall provide a written updated status report every 30 days or as otherwise reasonably requested by the DFCM Representative; and

(2) After the scope of work or other factors addressing the issue are completed, the complete information, including any impacts on time, cost or other relief requested, must be provided to the DFCM Representative within twenty-one (21) days of such completion.

7.7.5 SUBCONTRACTORS.

(1) Under no circumstances shall any provision of these Contract Documents be intended or construed to create any contractual relationship between the DFCM and any Subcontractor.

(2) The Contractor must include the provisions of this Paragraph 7.7.5 in its contract with the first tier Subcontractor, and each Subcontractor must do likewise. At the Contractor's discretion, the Contractor may allow a Subcontractor at the 2nd tier and beyond to submit the PRE directly with the Contractor.

(3) In order for a Subcontractor at any tier to be involved with the PRE of the DFCM, the following conditions and process shall apply:

(a) The Subcontractor must have attempted to resolve the issue with the Contractor including the submission of a PRE with the Contractor.

(b) The Subcontractor must file a copy of the PRE with the DFCM Representative;

(c) The PRE to the Contractor must meet the time, content and supplementation requirements of Paragraphs 7.7.2, 7.7.3 and 7.7.4. The triggering event for a Subcontractor to file a PRE shall be the time at which the issue cannot be resolved through the normal business practices associated with the contract, excluding arbitration and litigation;

(d) The PRE submitted to the Contractor shall only be eligible for consideration in the DFCM's PRE process to the extent the issue is reasonably related to the performance of the DFCM or an entity for which the DFCM is liable;

(e) The Contractor shall resolve the PRE to the satisfaction of the Subcontractor within sixty (60) days of its submittal to the Contractor or such other time period as subsequently agreed to by the Subcontractor in writing. If the Contractor fails to resolve the PRE with the Subcontractor within such required time period, the Subcontractor may submit in writing the PRE with the Contractor and the DFCM. In order to be eligible for DFCM consideration of the PRE, the Subcontractor must submit the PRE within twenty-one (21) days of the expiration of the time period for the Contractor/Subcontractor PRE process. The DFCM shall consider the PRE as being submitted by the Contractor on behalf of the Subcontractor;

(f) Upon such PRE being submitted, the Contractor shall cooperate with the DFCM Representative in reviewing the issue;

(g) The DFCM shall not be obligated to consider any submission which is not in accordance with any provision of this Article 7.7;

(h) The Subcontractor may accompany the Contractor in participating with the DFCM regarding the PRE raised by the Subcontractor. The DFCM is not precluded from meeting with the Contractor separately and it shall be the responsibility of the Contractor to keep the Subcontractor informed of any such meetings; and

(i) Notwithstanding any provision of this Paragraph 7.7.5, a Subcontractor shall be entitled to pursue a payment bond claim.

7.7.6 PRE RESOLUTION PROCEDURE. The DFCM Representative may request additional information and may meet with the parties involved with the issue.

7.7.7 CONTRACTOR REQUIRED TO CONTINUE PERFORMANCE. Pending the final resolution of the issue, unless otherwise agreed upon in writing by the DFCM Representative, the Contractor shall proceed diligently with performance of the Contract and the DFCM shall continue to make payments in accordance with the Contract Documents.

7.7.8 DECISION. The DFCM shall issue to the Contractor, and any other party brought into the process by the DFCM Representative as being liable to the DFCM, a written decision providing the basis for the decision on the issues presented by all of the parties within thirty (30) days of receipt of all the information required under Paragraphs 7.7.3 and 7.7.4.

7.7.9 DECISION FINAL UNLESS CLAIM SUBMITTED. The decision by the DFCM shall be final, and not subject to any further administrative or judicial review (not including judicial enforcement) unless a Claim is submitted in accordance with these General Conditions.

7.7.10 EXTENSION REQUIRES MUTUAL AGREEMENT. Any time period specified in this Article 7.7 may be extended by mutual agreement of the Contractor and the DFCM.

7.7.11 IF DECISION NOT ISSUED. If the decision is not issued within the thirty (30) day period, including any agreed to extensions, the issue may be pursued as a Claim.

7.7.12 PAYMENT FOR PERFORMANCE.

(1) Except as otherwise provided in the Contract Documents, any final decision where the DFCM is to pay additional monies to the Contractor, shall not be delayed by any PRE, Claim or appeal by another party.

(2) Payment to the Contractor of any final decision shall be made by the DFCM in accordance with the contract for the completed work.

(3) Notwithstanding any other provision of the Contract Documents, payment to the Contractor shall be subject to any set-off, claims or counterclaims of the DFCM.

(4) Payment to the Contractor for a Subcontractor issue submitted by the Contractor shall be paid by the Contractor to the Subcontractor in accordance with the contract between the Contractor and the Subcontractor.

(5) Any payment or performance determined owing by the Contractor to the DFCM shall be made in accordance with the Contract Documents.

7.8. RESOLUTION OF CLAIM.

7.8.1 CLAIM. If the decision on the PRE is not issued within the required timeframe or if the Contractor is not satisfied with the decision, the Contractor or other party brought into the process by the DFCM, may submit a Claim in accordance with this Article 7.8 as a prerequisite for any further consideration by the DFCM or the right to any judicial review of the issue giving rise to the claim.

7.8.2 SUBCONTRACTORS. In order for a Subcontractor to have its issue considered in the Claim process by the DFCM, the Subcontractor that had its issue considered under Paragraph 7.7.5 may submit the issue as a Claim by filing it with the Contractor and the DFCM within the same timeframe and with the same content requirements as required of a Claim submitted by the Contractor under this rule. The DFCM shall consider the Claim as being submitted by the Contractor on behalf of the Subcontractor. Under no circumstances shall any provision of these General Conditions or the Contract Documents be intended or construed so as to create any contractual relationship between the DFCM and any Subcontractor.

(1) Upon such Claim being submitted, the Contractor shall fully cooperate

with the Director, the person(s) evaluating the claim and any subsequent reviewing authority.

(2) The Director shall not be obligated to consider any submission which is not in accordance with this Paragraph 7.8.2.

(3) The Subcontractor may accompany the Contractor in participating with the Director, the person(s) evaluating the Claim and any subsequent reviewing authority regarding the Claim. The Director, the person(s) evaluating the Claim and any subsequent reviewing authority is not precluded from meeting with the Contractor separately, and it shall be the responsibility of the Contractor to keep the Subcontractor informed of any such meetings and matters discussed.

(4) Notwithstanding any provision of this Article 7.8, a Subcontractor shall be entitled to pursue a payment bond claim.

7.8.3 TIME FOR FILING. The Claim must be filed in writing promptly with the Director, but in no case more than twenty-one (21) days after the decision is issued on the PRE under Paragraph 7.7.8 or no more than twenty-one (21) days after the thirty (30) day period under Paragraph 7.7.11 has expired with a decision not issued, whichever is later.

7.8.4 CONTENT REQUIREMENT. The written Claim shall include:

(1) A description of the issues in dispute;

(2) The basis for the Claim, including documentation and analysis required by the contract and applicable law and rules that allow for the proper determination of the Claim;

(3) A detailed cost estimate for any amount sought, including copies of any related invoices; and

(4) A specific identification of the relief sought.

7.8.5 EXTENSION OF TIME TO SUBMIT DOCUMENTATION. The time period for submitting documentation and any analysis to support a Claim may be extended by the Director upon written request of the claimant showing just cause for such extension, which request must be included in the initial Claim submittal.

7.8.6 CONTRACTOR REQUIRED TO CONTINUE PERFORMANCE. Pending the final determination of the Claim, including any judicial review or appeal process, and unless otherwise agreed upon in writing by the Director, the Contractor shall proceed diligently with performance of the Contract and the DFCM shall continue to make payments in accordance with the Contract Documents.

7.8.7 AGREEMENT OF CLAIMANT ON METHOD AND PERSON(S) EVALUATING THE CLAIM. The Director shall first attempt to reach agreement with the claimant on the method and person(s) to evaluate the Claim. If such agreement cannot be made within fourteen (14) days of filing of the Claim, the Director shall select the method and person(s), considering the purposes described in Rule R23-26-1. Unless agreed to by the Director and the claimant, any selected person shall not have a conflict of interest or appearance of impropriety. Any party and the person(s) evaluating the Claim has a duty to promptly raise any circumstances regarding a conflict of interest or appearance of impropriety. If such a reasonable objection is raised, and unless otherwise agreed to by the Director and the claimant, the Director shall take appropriate action to eliminate the conflict of interest or appearance of impropriety. The dispute resolution methods and person(s) may include any of the following:

(1) A single expert and/or hearing officer qualified in the field that is the subject of the Claim;

(2) An expert panel, consisting of members that are qualified in a field that is the subject of the Claim;

(3) An arbitration process which may be binding if agreed to by the parties to the Claim;

(4) A mediator; or

(5) Any other method that best accomplishes the purposes set forth in Rule R23-26-1.

7.8.8 THE EVALUATION PROCESS, TIMEFRAMES OF EVALUATOR(S), DIRECTOR'S DETERMINATION, ADMINISTRATIVE APPEAL TO THE EXECUTIVE DIRECTOR AND JUDICIAL REVIEW. The Claim shall be evaluated, the timeframe for specific events related to the person(s) evaluating the Claim, the Director's determination, any appeal to the Executive Director and any judicial review shall be subject to the provisions of Rule R23-26-5(8), R23-26-5(9), R23-26-6 and R23-26-8. A copy of these Administrative Rules are available at DFCM.

7.8.9 APPEAL PROCESS PREREQUISITE FOR FURTHER CONSIDERATION OR JUDICIAL REVIEW. The administrative appeal to the Executive Director is a prerequisite for any further consideration by the State of Utah, or to judicial review of the issue giving rise to the Claim. It shall be considered that the Contractor, or another party brought into the process by the DFCM, has not exhausted its administrative remedies if such an administrative appeal is not undertaken.

7.9 PAYMENT OF CLAIM.

7.9.1 When a stand alone component of a Claim has received a final determination, and is no longer subject to review or appeal, that amount shall be paid in accordance with the payment provisions of the Contract Documents or judicial order.

7.9.2 When the entire Claim has received a final determination, and is no longer subject to review or appeal, the full amount shall be paid within fourteen (14) days of the date of the final determination unless the work or services has not been completed, in which case the amount shall be paid in accordance with the payment provisions of the Contract Documents to the point that the work or services is completed.

7.9.3 The final determination date is the earlier of the date upon which the claimant accepted the settlement in writing with an executed customary release document and waived its rights of appeal, or the expiration of the appeal period, with no appeal filed, or the determination made resulting from the final appeal.

7.9.4 Any final determination where the Division is to pay additional monies to the Contractor shall not be delayed by any appeal or request for judicial review by another party brought into the process by the Division as being liable to the DFCM.

7.9.5 Notwithstanding any other provision of the Contract Documents, payment of all or part of a Claim is subject to any set-off, claims or counterclaims of the DFCM.

7.9.6 Payment to the Contractor for a Subcontractor issue (Claim) deemed filed by the Contractor, shall be paid by the Contractor to the Subcontractor in accordance with the contract between the Contractor and the Subcontractor.

7.9.7 The execution of a customary release document related to any payment may be required as a condition of making the payment.

7.10 ALLOCATION OF COSTS OF CLAIM RESOLUTION PROCESS.

7.10.1 In order to file a Claim, a claimant must pay a $1500 filing fee to the DFCM. When the Claim is a pass-through from a Subcontractor in accordance with Paragraph 7.7.5, the payment of the fee shall be made by the Subcontractor.

7.10.2 Unless otherwise agreed to by the parties to the Claim, the costs of resolving the Claim shall be allocated among the parties on the same proportionate basis as the determination of financial responsibility for the Claim.

7.10.3 The costs of resolving the Claim that are subject to allocation include the claimant's filing fee, the costs of any person(s) evaluating the Claim, the costs of making any required record of the process, and any additional testing or inspection procured to investigate and/or evaluate the Claim.

7.10.4 Each party is responsible for its own attorney fees.

7.11 ALTERNATIVE PROCEDURES. To the extent otherwise permitted by law, if all parties to a Claim agree in writing, a protocol for resolving a Claim may be used that differs from the process described in this Article 7.

7.12 IMPACT ON FUTURE SELECTIONS.

7.12.1 The presentation of a good faith and non-frivolous issue or Claim shall not be considered by the DFCM's selection process for a future award of contract; and

7.12.2 The submission of a bad faith and frivolous issue or Claim, or the failure by a Contractor to facilitate resolution of a Claim, may be considered in the DFCM's evaluation of performance.

7.13 REPORT TO BUILDING BOARD. The DFCM may report on the claim to the Utah State Building Board.

7.14 DFCM'S RIGHT TO HAVE ISSUES, DISPUTES OR CLAIMS CONSIDERED. As stated in Rule R23-26-1(6), Articles 7.7 through 7.13 above do not limit the right of DFCM to have any of its issues, disputes or claims considered. DFCM reserves all rights to pursue its issues, disputes or claims in law or equity including, but not limited to, any or all of the following: damages, delay damages and impacts, losses, liability, patent or latent defects, or failure to perform under the Contract Documents. If the Director appoints an expert or a panel to consider any such issue(s), dispute(s) or claim(s) of DFCM, the Contractor shall cooperate with such expert or panel process.

ARTICLE 8. PAYMENTS AND COMPLETION.

8.1 SCHEDULE OF VALUES. With the first Application for Payment, the Contractor shall submit to the A/E and the DFCM Representative a schedule of values allocated to all the various portions of the Work. The Schedule of Values shall be submitted on the form approved and provided by DFCM. The A/E shall make recommendations to the DFCM Representative regarding the Schedule of Values including any suggested modifications. When approved, including any approved modifications, by the DFCM Representative, it shall be the basis for future Contractor Applications for Payments. The Contractor shall not be entitled to payment until receipt and acceptance of the Schedule of Values.

8.2 APPLICATIONS FOR PAYMENT.

8.2.1 IN GENERAL. The following general requirements shall be met:

(1) The Contractor shall submit to the A/E an itemized Application for Payment for Work completed in accordance with the schedule of values and that reflects retainage as provided for in the Contractor's Agreement. The Application for Payment shall be on a special form approved and provided by DFCM.

(2) Such application shall be supported by such data substantiating the Contractor's right to payment as the DFCM or A/E may require. Said data may include, but is not limited to, copies of requisitions from Subcontractors.

(3) Such applications may include requests for payment pursuant to approved Change Orders or Construction Change Directives.

(4) Such applications may not include requests for payment for portions of the Work performed by a subcontractor when the Contractor does not intend to pay to a Subcontractor because of a dispute or other reason.

(5) In executing the Application for Payment, the Contractor shall attest that subcontractors involved with prior applications for payment have been paid, unless the Contractor provides a detailed explanation why such payment may not have occurred. DFCM reserves the right to require the Contractor to submit a payment waiver from one or more subcontractors.

8.2.2 PAYMENT FOR MATERIAL AND EQUIPMENT. Unless otherwise provided in the Contract Documents, payments shall be made on account of materials and equipment

delivered and suitably stored at the site for subsequent incorporation in the Work. If approved in advance by the DFCM and A/E, payment may similarly be made for materials and equipment suitably stored off the site at a location agreed upon in writing. Payment for materials and equipment stored on or off the site shall be conditioned upon compliance by the Contractor with procedures satisfactory to the DFCM to establish the DFCM's title to such materials and equipment or otherwise protect the DFCM's interest, and shall include applicable insurance, storage and transportation to the site for such materials and equipment stored off the site. The DFCM may require copies of invoices or other suitable documentation.

8.2.3 WARRANTY OF TITLE. The Contractor warrants that title to all Work covered by an Application for Payment will pass to the DFCM no later than the time for payment. The Contractor further warrants that upon submittal of an Application for Payment, all Work for which Certificates for Payment have been previously issued and payments received from the DFCM shall, to the best of the Contractor's knowledge, information and belief, be free and clear of liens, claims, security interests or encumbrances in favor of the Contractor, Subcontractors, or other persons or entities making a claim by reason of having provided labor, materials and/or equipment relating to the Work.

8.2.4 HOLDBACK BY DFCM. Notwithstanding anything to the contrary contained in the Contract Documents, the DFCM may, as a result of the claims resolution process, withhold any payment to the Contractor hereunder if and for so long as the Contractor fails to perform any of its obligations hereunder or otherwise is in default under any of the Contract Documents.

8.3 CERTIFICATES FOR PAYMENT.

8.3.1 ISSUED BY A/E. The A/E shall within ten (10) days after receipt of the Contractor's Application for Payment, either issue to the DFCM a Certificate for Payment, with a copy to the Contractor, for such amount as the A/E determines due, or notify the Contractor and DFCM in writing of the A/E's reasons for withholding certification in whole or in part as provided in Paragraph 8.4.1. If the A/E fails to act within said ten (10) day period, the Contractor may file the Application for Payment directly with the DFCM Representative and the DFCM will thereafter have twenty (20) days from the date of the DFCM's receipt to resolve the amount to be paid and to pay the undisputed amount. The accuracy of the Contractor's Applications for Payment shall be Contractor's responsibility, not A/E's.

8.3.2 A/E'S REPRESENTATIONS. The A/E's issuance of a Certificate for Payment shall constitute a representation to the DFCM that to the best of the A/E's knowledge, information and belief, based upon the A/E's observations at the site, the data comprising the Application for Payment, and what is reasonably inferable from the observations and data, that the Work has progressed to the point indicated in the Application and that the quality of the work is in accordance with the Contract Documents. The foregoing representations are subject to minor deviations from the Contract Documents correctable prior to completion and to specific qualifications expressed by the A/E. The issuance of a Certificate for Payment will further constitute a representation that the Contractor is entitled to payment in the amount certified. However, the issuance of a Certificate for Payment shall not be a representation that the A/E has (a) made exhaustive or continuous on-site inspections to check the quality or quantity of the Work, (b) reviewed construction means, methods, techniques, sequences or procedures, (c) reviewed copies of requisitions received from Subcontractors and material suppliers and other data requested by the DFCM to substantiate the Contractor's right to payment, (d) ascertained how or for what purpose the Contractor used money previously paid on account of Contract Sum, or (e) any duty to make such inquiries.

8.4 DECISIONS TO WITHHOLD CERTIFICATION.

8.4.1 WHEN WITHHELD. The A/E may decide not to certify payment and may withhold a Certificate for Payment in whole or in part, to the extent reasonably necessary to protect the DFCM, if in the A/E's judgment the representations to the DFCM required in

Paragraph 8.3.2 above can not be made. If the A/E is unable to certify payment in the amount of the Application, the A/E shall notify the Contractor and DFCM as provided in Paragraph 8.3.1 above. If the Contractor and A/E can not agree on a revised amount, the A/E shall promptly issue a Certificate for Payment for the amount to which the A/E makes such representations to the DFCM. The A/E may also decide not to certify payment or, because of subsequently discovered evidence or observations, may nullify the whole or part of a Certificate for Payment previously issued, to such extent as may be necessary in the A/E's opinion to protect the DFCM from loss because of:

(1) Defective Work not remedied;

(2) Third party claims filed or reasonable evidence indicating probable filing of such claims;

(3) Failure of the Contractor to make payments properly to Subcontractors or for labor, materials or equipment;

(4) Reasonable evidence that the Work cannot be completed for the unpaid balance of the Contract Sum;

(5) Damage to the DFCM or another contractor;

(6) Reasonable evidence that the Work will not be completed within the Contract Time, and that the unpaid balance would not be adequate to cover actual or liquidated damages for the anticipated delay; or

(7) Failure to carry out the Work in accordance with the Contract Documents.

8.4.2 CERTIFICATION ISSUED WHEN REASONS FOR WITHHOLDING REMOVED. When the reasons stated in Paragraph 8.4.1 for withholding certification are removed, certification will be made for such related amounts.

8.4.3 CONTINUE WORK EVEN IF CONTRACTOR DISPUTES A/E'S DETERMINATION. If the Contractor disputes any determination by the A/E or the result of the claims resolution process with regard to any Certification of Payment, the Contractor nevertheless shall expeditiously continue to prosecute the Work.

8.4.4 DFCM NOT IN BREACH. The DFCM shall not be deemed to be in breach of this Contract by reason of the withholding of any payment pursuant to any provision of the Contract Documents provided the DFCM's action or such withholding is consistent with the results of the dispute resolution process.

8.5 PROGRESS PAYMENTS.

8.5.1 IN GENERAL, INTEREST OR LATE PAYMENTS.

(1) Except as provided in Paragraph 8.3.1, the DFCM shall pay any undisputed amount within thirty (30) days of the date that the application for payment was submitted to the A/E. In no event shall DFCM be required to pay any disputed amount.

(2) Except as otherwise provided by law, if any payment is late based upon the provisions of the Contract Documents, the Contractor shall be paid interest in an amount equal to the published Wall Street Journal prime rate plus 2%. The published Wall Street Journal Prime Rate shall be determined using such rate that is published closest to the 1st of the month for each month of the late period. The amount of payment of interest shall be apportioned using such rate(s) for the late period.

8.5.2 CONTRACTOR AND SUBCONTRACTOR RESPONSIBILITY. The Contractor shall promptly pay each Subcontractor, upon receipt of payment from the DFCM, out of the amount paid to the Contractor on account of such Subcontractor's portion of the Work, the amount to which said Subcontractor is entitled. The Contractor shall, by appropriate agreement with each Subcontractor, require each Subcontractor to make payment to its Subcontractors in a similar manner.

8.5.3 INFORMATION FURNISHED BY A/E OR DFCM TO SUBCONTRACTOR. The A/E or DFCM shall, on request, furnish to the Subcontractor, if practicable, information regarding percentages of completion or amounts applied for by the Contractor and action taken thereon by the A/E and DFCM on account of portions of the Work done by such Subcontractor.

8.5.4 DFCM AND A/E NOT LIABLE. Neither the DFCM or A/E shall have an obligation to pay, monitor or enforce the payment of money to a Subcontractor, except to the extent as may otherwise be required by law.

8.5.5 CERTIFICATE, PAYMENT OR USE NOT ACCEPTANCE OF IMPROPER WORK. A Certificate for Payment, a progress payment, or partial or entire use or occupancy of the Project by the DFCM shall not constitute acceptance of Work that is not in accordance with the Contract Documents.

8.6 PAYMENT UPON SUBSTANTIAL COMPLETION. Upon Substantial Completion of the Work or designated portion thereof and upon application by the Contractor and certification by the A/E, the DFCM shall make payment, reflecting adjustment in retainage, if any, for such Work or portion thereof as provided in the Contract Documents. To the extent allowed by law, the DFCM may retain up to 200% of the fair market value of the work that has not been completed in accordance with the Contract Documents.

8.7 PARTIAL OCCUPANCY OR USE.

8.7.1 IN GENERAL. The DFCM may occupy or use any completed or partially completed portion of the Work at any stage when such portion is designated by separate agreement with the Contractor, and authorized by public authorities having jurisdiction over the Work. Such partial occupancy or use may commence whether or not the portion is Substantially Complete, provided the DFCM and Contractor have accepted in writing the responsibilities assigned to each of them for payments, retainage if any, security, maintenance, heat, utilities, damage to the Work and insurance, and have agreed in writing concerning the period for correction of the Work and commencement of the warranties required by the Contract Documents. When the Contractor considers a portion to be substantially complete, the Contractor shall prepare and submit a list to the A/E as previously provided for herein. Consent of the Contractor to partial occupancy or use shall not be unreasonably withheld. Contractor shall have continuing responsibility to protect the site and the Work during such partial occupancy and shall be responsible for damage except to the extent caused solely by the DFCM during such partial occupancy or use.

The stage of progress of the Work shall be determined by written agreement between the DFCM and Contractor.

8.7.2 INSPECTION. Immediately prior to such partial occupancy or use, the DFCM, Contractor and A/E shall jointly inspect the area to be occupied or portion of the Work to be used in order to determine and record the condition of the Work.

8.7.3 NOT CONSTITUTE ACCEPTANCE. Except to the extent it is agreed upon in writing by the DFCM, partial occupancy or use of a portion or portion of the Work shall not constitute acceptance of Work not complying with the requirement of the Contract Documents.

8.8 FINAL PAYMENT.

8.8.1 CERTIFICATE FOR PAYMENT. The A/E's final Certificate for Payment shall constitute a further representation that the conditions listed in Paragraph 8.8.2 as precedent to the Contractor's being entitled to final payment have been fulfilled.

8.8.2 CONDITIONS FOR FINAL PAYMENT. Neither final payment nor any remaining retained percentage shall become due until the Contractor submits to the A/E the following to the extent required by the DFCM Representative:

(1) An affidavit that payrolls, bills for material and equipment, and other indebtedness connected with the Work for which the DFCM or the State of Utah's property might be responsible or encumbered (less amounts

withheld by DFCM) have been paid or otherwise satisfied;

(2) A current or additional certificate evidencing that insurance required by the Contract Documents to remain in force after final payment is currently in effect and will not be canceled or allowed to expire until at least 30 days prior written notice, by certified mail, return receipt requested, has been given to the DFCM;

(3) A written statement that the Contractor knows of no substantial reason that the insurance will not be renewable to cover the period required by the Contract Documents;

(4) If requested by surety in a timely manner or by DFCM, consent of surety, to final payment;

(5) Receipt of Record Drawings, Specifications, Addenda, Change Orders and other Modifications maintained at the site; the warranties, instructions, operation and maintenance manuals, and training videos required to be furnished by the Contract Documents;

(6) Other data establishing payment or satisfaction of obligations, such as receipts, releases and waivers of liens, claims, security interests or encumbrances arising out of the Contract, to the extent and in such form as may be designated by the DFCM. If a Subcontractor refuses to furnish a release or waiver required by the DFCM, the DFCM may require consent of Surety to the final payment. If such liens, claims, security interests or encumbrances remain unsatisfied after payments are made, the Contractor shall refund to the DFCM all money that the DFCM may be compelled to pay in discharging such lien, including all costs and reasonable attorneys' fees; and

(7) A written statement demonstrating how the Contractor will distribute interest earned on retention to Subcontractors as required by Section 13.8.5, U.C.A.

8.8.3 WAIVER OF CLAIMS: FINAL PAYMENT. The making of final payment shall constitute a waiver of Claims by the-DFCM except those arising from:

(1) Liens, Claims, security interests or encumbrances arising out of the Contract and unsettled;

(2) Failure of the Work to comply with the requirements of the Contract Documents;

(3) Terms of warranties required by the Contract Documents; or

(4) The one-year guaranty period and any corrected Work.

8.8.4 DELAYS NOT CONTRACTOR'S FAULT. If, after Substantial Completion of the Work, final completion thereof is materially delayed through no fault of the Contractor or by issuance of Change Orders affecting final completion, the DFCM shall, upon application by the Contractor and certification by the A/E, and without terminating the Contract, make payment of the balance due for that portion of the Work fully completed and accepted. Such payment shall be made under terms and conditions governing final payment, except that it shall not constitute a waiver of claims. Unless otherwise stated by the DFCM in writing, the making of final payment shall constitute a waiver of claims by the DFCM as provided in Paragraph 8.8.3 for that portion of that Work fully completed and accepted by the DFCM.

8.8.5 WAIVER BY ACCEPTING FINAL PAYMENT. Acceptance of final payment by the Contractor or a Subcontractor shall constitute a waiver of Claims by that payee except those Claims previously made in writing and identified by that payee as unsettled at the time of final Application for Payment. Such waivers shall be in addition to the waiver described in Paragraph 8.8.3.

ARTICLE 9. TESTS AND INSPECTIONS, SUBSTANTIAL AND FINAL COMPLETION, UNCOVERING, CORRECTION OF WORK AND GUARANTY PERIOD.

9.1 TESTS AND INSPECTIONS.

9.1.1 IN GENERAL. Tests, inspections and approvals of portions of the Work required by the Contract Documents or by laws, ordinances, rules, regulations, resolutions or orders of public authorities having jurisdiction shall be made at an appropriate time. Unless otherwise specifically set forth in the Contract Documents or agreed to by the DFCM in writing, the DFCM shall contract for such tests, inspections and approvals with an independent entity, or with the appropriate public authority, and the DFCM shall bear all related costs of tests, inspections and approvals except as provided below. If any of the Work is required to be inspected or approved by the terms of the Contract Documents or by any public authority, the Contractor shall, at least two working days prior to the time of the desired inspection, and following the procedures established by the DFCM, request such inspection or approval to be performed. The Contractor shall give the A/E timely notice of when and where tests and inspections are to be made so that the A/E may observe such procedures.

9.1.2 FAILURE OF AN INSPECTOR TO APPEAR. Work shall not proceed without any required inspection and the associated authorization by DFCM to proceed unless the following procedures and requirements have been met:

(1) The inspection or approval was requested in a timely manner as provided in Paragraph 9.1.1;

(2) The Contractor received written confirmation from the inspection entity that the inspection was scheduled;

(3) The Contractor has contacted or attempted to contact the inspector to confirm that the inspector is unable to perform the inspection as scheduled;

(4) If the inspector has confirmed that it is unable to perform the inspection as scheduled or if the Contractor is unable to contact the inspector, the contractor shall attempt to contact the State Building Official or DFCM Representative for instruction; and

(5) The Contractor has documented the condition of the work prior to being covered through photos or other means.

9.1.3 NONCONFORMING WORK. If such procedures for testing, inspection or approval under Paragraph 9.1.1 reveal failure of portions of the Work to comply with the requirements established by the Contract Documents, the Contractor shall bear all costs made necessary by such failure including those of repeated procedures and compensation for the DFCM's expenses, including the cost of retesting for verification of compliance if necessary, until the DFCM accepts the Work in question as complying with the requirements of the Contract Documents.

9.1.4 CERTIFICATES. Required certificates of testing, inspection or approval shall, unless otherwise required by the Contract Documents, be secured by the Contractor and promptly delivered to the A/E.

9.1.5 A/E OBSERVING. If the A/E is to observe tests, inspections or approvals required by the Contract Documents, the A/E shall do so with reasonable promptness and, where practicable, at the normal place of testing.

9.1.6 PROMPTNESS. Tests, inspections and arrangements for approvals conducted pursuant to the Contract Documents shall be made promptly to avoid unreasonable delay in the Work.

9.2 INSPECTIONS: SUBSTANTIAL AND FINAL.

9.2.1 SUBSTANTIAL COMPLETION INSPECTION. Prior to requesting a substantial completion inspection, the Contractor shall prepare a comprehensive initial punchlist, including unresolved items from prior inspections, for review by the DFCM and A/E to determine if the Project is ready for a substantial completion inspection. If the DFCM determines that the initial punchlist indicates that the Project is not substantially complete, the initial punchlist will be returned to the Contractor with written comments. If the DFCM determines that the initial punchlist indicates that the Project may be substantially complete, the A/E shall promptly organize and

perform a Substantial Completion inspection in the presence of the DFCM and all appropriate authorities.

(1) If the A/E reasonably determines that the initial punchlist prepared by the Contractor substantially understates the amount of the Work remaining to be completed and the Project is not substantially complete, the A/E shall report this promptly to the DFCM, and upon concurrence of the DFCM, the Contractor will be assessed the costs of the inspection and punchlist preparation incurred by the A/E and the DFCM.

(2) When the Work or designated portion thereof is Substantially Complete, the A/E shall prepare a Certificate of Substantial Completion which shall establish the date of Substantial Completion; shall establish responsibilities of the DFCM and Contractor for security, maintenance, heat, utilities, damage to the work and insurance; and shall fix the time within which the Contractor shall finish all items on the punchlist accompanying the Certificate. The Certificate of Substantial Completion shall require approval by the DFCM Representative. If there is a punchlist, the Contractor shall proceed promptly to complete and correct items on the list. Failure to include an item on the punchlist does not alter the responsibility of the Contractor to complete all Work in accordance with the Contract Documents.

(3) Warranties required by the Contract Documents shall commence on the date of Substantial Completion of the Work or designated portion thereof except to the extent as provided otherwise in the Contract Documents or if such warranty is related to an item where the work is not complete. Such warranty documents shall state the length of the warranty, which must comply with the Contract Documents.

(4) The Certificate of Substantial Completion shall be submitted by the A/E to the DFCM and Contractor for their written acceptance of responsibilities assigned to them in such Certificate.

(5) Except to the extent the DFCM Representative otherwise approves in advance and in writing, the Contractor shall submit the following documents in order to achieve Substantial Completion: written warranties, guarantees, operation and maintenance manuals, and all complete as-built drawings. The Contractor must also provide or obtain any required approvals for occupancy. The Contractor is responsible for the guaranty of all Work, whether performed by it or by its Subcontractors at any tier.

9.2.2 FINAL COMPLETION INSPECTION. Prior to requesting a final inspection, the Contractor shall verify all punchlist items are corrected/completed. Once all punchlist items are corrected/completed the Contractor shall notify the DFCM and request a final inspection. The DFCM shall notify the A/E and perform a final inspection. Two final inspections may be allowed due to required weather changes required to complete some items. When all punchlist items are completed a final pay request will be provided by the Contractor, authorized by the A/E and processed by the DFCM.

9.3 UNCOVERING OF WORK.

9.3.1 UNCOVER UNINSPECTED WORK. Except as provided in Paragraph 9.3.3, if a portion of the Work is covered prior to an Inspector's approval to proceed, it must, be uncovered for the Inspector's inspection and be replaced at the Contractor's expense without change in the Contract Time.

9.3.2 OBSERVATION PRIOR TO COVERING. Except as provided in Paragraph 9.3.3, if the DFCM or the A/E has requested in writing to observe conditions prior to any Work being covered or if such observation is specified in the Contract Documents, and the Work is covered without such observation, the Contractor shall be required to uncover and appropriately replace the Work at the Contractor's expense without change in the Contract Time. If the Contractor requests an inspection and the DFCM or A/E, including any inspector of each, does not appear, the Contractor shall immediately notify the DFCM of such lack of appearance, but shall not cover the Work without such inspection.

9.3.3 WHEN AN INSPECTOR FAILS TO APPEAR OR A/E OR DFCM DID NOT MAKE PRIOR REQUEST. If Work is performed by the Contractor without an inspection as provided in Paragraph 9.1.2 or if a portion of the Work has been covered which the A/E or DFCM has not specifically requested to observe prior to its being covered or such observation is not specified by the Contract Documents, the A/E or DFCM may request to see such Work and it shall be uncovered by the Contractor. If such Work is in accordance with the Contract Documents, costs of uncovering and replacement, shall, by appropriate Change Order, be charged to the DFCM. If such Work is not in accordance with the Contract Documents, the Contractor shall pay such costs unless the condition was caused by the DFCM or a separate contractor in which event the DFCM shall be responsible for payment of such costs.

9.4 CORRECTION OF WORK AND GUARANTY PERIOD.

9.4.1 CONTRACTOR CORRECT THE WORK. The Contractor shall correct Work rejected by the A/E, Inspector or DFCM, or failing to conform to the requirements of the Contract Documents, whether observed before or after Substantial Completion and whether or not fabricated, installed or completed. The Contractor shall bear the costs of correcting such rejected Work, including additional testing and inspections and compensation for the A/E's and Inspector's services and expenses made necessary thereby.

9.4.2 GUARANTY AND CORRECTION AFTER SUBSTANTIAL COMPLETION. If within one year after the date of Substantial Completion of the Work or designated portion thereof, or after the date for commencement of warranties established under Paragraph 9.2.1 or by terms of an applicable special warranty or guaranty required by the Contract Documents, any of the Work is found to be not in accordance with the requirements of the Contract Documents, including failure to perform for its intended purpose, the Contractor shall correct it promptly after receipt of written notice from the DFCM to do so unless the DFCM has previously given the Contractor a written acceptance of such condition. The period of one year shall be extended with respect to portions of the Work first performed after Substantial Completion by the period of time between Substantial Completion and the actual performance of the Work. This obligation of the Contractor under this Paragraph 9.4.2 shall be operative notwithstanding the acceptance of the Work under the Contract, the final certificate of payment, partial or total occupancy and/or termination of the Contract. The DFCM shall give notice of observed defects with reasonable promptness, however, failure to give such notice shall not relieve the Contractor of its obligation to correct the Work at the cost that the Contractor would have incurred if the DFCM did so report with reasonable promptness. All corrected Work shall be subject to a one-year guaranty period the same in all respects as the original Work, except that such guaranty period shall commence from the time of Substantial Completion of the corrected Work. This guaranty period does not affect the DFCM's right to pursue any available remedies against Contractor.

9.4.3 REMOVAL OF WORK.

(1) The Contractor shall promptly remove from the premises all Work that the DFCM and/or the A/E determines as being in nonconformance with the Contract Documents, whether incorporated or not.

(2) The Contractor shall promptly replace and re-execute the Work in accordance with the Contract Documents and without expense to the DFCM.

(3) The Contractor shall bear the expense of correcting destroyed or damaged construction, whether completed or partially completed, of the DFCM or of other contractors destroyed or damaged by such removal or replacement.

(4) If the Contractor does not remove such rejected Work within a reasonable time, fixed by written notice, the DFCM may have the materials removed and stored at the expense of the Contractor.

(5) If the Contractor does not correct the nonconforming Work within a

reasonable time, fixed by written notice, the DFCM may correct it in accordance with Paragraph 12.2.2 of these General Conditions.

9.4.4 NOT LIMIT OTHER OBLIGATIONS. Nothing contained in this Article 9.4 shall be construed to establish a period of limitation with respect to other obligations which the Contractor may have under the Contract Documents. Establishment of the time period of one year as described in Paragraph 9.4.2 relates only to the specific obligation of the Contractor to correct the Work, and has no relationship to the time within which the obligation to comply with the Contract Documents may be sought to be enforced, nor to the time within which proceedings may be commenced to establish the Contractor's liability with respect to the Contractor's obligations other than specifically to correct the Work.

9.5 ADDITIONAL WARRANTIES.

9.5.1 IN GENERAL. In addition to any other provisions of this Article 9, the following warranties shall apply:

(1) The Contractor warrants to the DFCM that materials and equipment furnished under the Contract will be of good quality and new, except to the extent otherwise required or expressly permitted by the Contract Documents.

(2) The Contractor also warrants to the DFCM that the Work will be free from defects not inherent in the quality required or permitted and that the Work will conform with the requirements of the Contract Documents. Work not conforming to said requirements, including substitutions not properly approved and authorized, may be considered defective at the DFCM's option.

9.5.2 EXCLUSION. Unless due to the negligent or intentional act or omission of the Contractor or those under the Contractor's control, or as otherwise stated in the Contract Documents, the Contractor's guaranty excludes remedy for damage or defect caused by abuse, modifications not executed by the Contractor, improper or insufficient maintenance, improper operation, or normal wear and tear under normal usage.

9.5.3 FURNISH EVIDENCE ON REQUEST. If requested by the A/E or DFCM, the Contractor shall furnish satisfactory evidence as to the type and quality of materials and equipment.

9.6 **ACCEPTANCE OF NONCONFORMING WORK**. If the DFCM prefers to accept Work which is not in accordance with the requirements of the Contract Documents, the DFCM may do so in writing instead of requiring its removal and correction, in which case the Contract Sum shall be reduced as appropriate and equitable. Such adjustment shall be effected whether or not final payment has been made.

ARTICLE 10. INSURANCE AND BONDS.

10.1 LIABILITY INSURANCE.

10.1.1 IN GENERAL. To protect against liability, loss and/or expense arising from damage to property or injury or death of any person or persons incurred in any way out of, in connection with or resulting from the Work provided hereunder, Contractor shall obtain and maintain in force during the entire period of this Contract without interruption, at its own expense, the following insurance from insurance companies authorized to do business in the State of Utah in a form and content satisfactory to the DFCM and rated "A-"or better with a financial size category of (a) Class X or larger where the Contract Sum is $1,000,000 or greater or (b) Class VII or larger where the Contract Sum is under $1,000,000. Said rating and financial size category shall be as published by A.M. Best Company at the time the Contract is executed.

(1) Workers' Compensation Insurance and Employers' Liability Insurance. Worker's Compensation Insurance shall cover full liability under the Worker's Compensation Laws of the jurisdiction in which the Project is located at the statutory limits required by said jurisdiction's laws. Employer's Liability Insurance shall provide the following limits of liability: $100,000 for each accident; $500,000 for Disease-Policy Limit; and $100,000 for Disease-Each Employee. The Contractor shall require all Subcontractors to take

and maintain similar policies of Workers' Compensation Insurance.

(2) Commercial General Liability Insurance.

a. Commercial General Liability Insurance, on an "occurrence basis," including insurance for operations, independent contractors, subcontractors at any tier, products/completed operations and contractual liability specifically designating the Indemnity provisions of these General Conditions as an insured contract on the Certificate of Insurance. Such Commercial General Liability Insurance must be endorsed with a Broad Form Property Damage Endorsement (including Completed Operations) and afford coverage for explosion, collapse and underground hazards. Such Commercial General Liability Insurance shall be in limits not less than the following:

$2,000,000 General Aggregate, plus:

i.. If the Construction Value is $25,000,000 or more, an additional $5,000,000 umbrella policy (which covers aggregate and per occurrence) is required; or

ii. if the Construction Value is $10,000,000 or more but less than $25,000,000, an additional $2,000,000 umbrella policy (which covers aggregate and per occurrence) is required.

$1,000,000	Products-Completed Operations Aggregate
$1,000,000	Personal and Advertising Injury
$1,000,000	Each Occurrence

b. For purposes of this subparagraph 2(a), Construction Value means:

i. the Contract Sum if the work is being performed under a Standard Construction Contractor's Agreement;

ii. the Fixed Limit of Construction Costs if the work is being performed under a Construction Manager/General Contractor Agreement; or

iii. the Guaranteed Fixed contract Amount if the work is to be performed under a Design/Build Agreement.

(3) Automobile liability insurance for claims arising from the ownership, maintenance, or use of a motor vehicle. The insurance shall cover all owned, non-owned, and hired automobiles used in connection with the Work, with the following minimum limits of liability:

$1,000,000 Combined Single Limit Bodily Injury and Property Damage Per Occurrence

(4) Aircraft Use. Contractor using its own aircraft, or employing aircraft in connection with the Work performed under this Agreement shall maintain Aircraft Liability Insurance with a combined single limit of not less than $1,000,000 per occurrence. Said certificate shall state that the policy required by this paragraph has been endorsed to name the State of Utah as Additional Insureds.

(5) Unless otherwise provided by the procurement documents, the insurance requirements in 10.1.1(1) through (4) above do not apply to subcontractors or suppliers at any tier under the Contractor and any insurance requirements of subcontractors and suppliers at any tier is a matter between the General Contractor and such subcontractor or supplier.

10.1.2 CONFIGURATIONS. Any policy required by this Article may be arranged under a single policy for the full limit required, or by a combination of underlying policies with the balance provided by an Excess or Umbrella Liability Policy.

10.1.3 CONTRACTOR LIABILITY. Irrespective of the requirements as to insurance to be carried by Contractor as provided herein; insolvency, bankruptcy or failure of any insurance company to pay all claims accruing, shall not be held to relieve Contractor of any obligations hereunder.

10.1.4 CERTIFICATE, NOTICE REQUIREMENTS, ADDITIONAL INSURED. Before the Contract Agreement is executed,

certificates evidencing coverages as specified above are in effect, shall be furnished to the DFCM. Such insurance certificates shall contain provisions that no cancellation, material change therein or non-renewal shall become effective except upon thirty (30) days prior written notice to the DFCM as evidenced by return receipt, certified mail sent to DFCM. The Contractor shall notify the DFCM within thirty (30) days of any claims(s) against the Contractor, and if such claim(s) exceed 20% of the applicable required insured limits, the DFCM may require the Contractor to re-instate the policy to provide full protection at the original limits. For any risk not covered by the Worker's Compensation Policy, the State of Utah shall be named as additional insured parties. All insurance policies provided shall be primary and non-contributing with, and not in excess of, any other insurance or self-insurance available to the State of Utah.

10.1.5 DEDUCTIBLE LIABILITY. Any and all deductibles in the above described policies shall be assumed by, for the account of, and at sole risk of Contractor. The allowable deductible for any of the policies required by these General Conditions shall be no more than $1,000 or 0.1 percent of the Contract Amount, whichever is greater. When there is an FLCC, the FLCC shall be the Contract Amount for purposes of calculating the allowable deductible.

10.1.6 ADDITIONAL REQUIREMENTS:

(1) Any type of insurance or any increase of limits of liability not described in this Agreement which the Contractor requires for its own protection or on account of any statute, rule or regulation, shall be its own responsibility and at its own expense.

(2) The carrying of any insurance required by this Agreement shall in no way be interpreted as relieving the Contractor or Subcontractors of any other responsibility or liability under this Agreement or any applicable law, statute, rule, regulation or order.

(3) Contractor shall not violate or knowingly permit to be violated any of the provisions of the policies on insurance required under these General Conditions.

10.2 "BUILDER'S RISK" PROPERTY INSURANCE.

10.2.1 IN GENERAL. The State shall provide "Builder's Risk" property insurance to protect the State, as well as all Contractors and Subcontractors, and include them as insureds, with respect to Work performed hereunder at the State's own cost and expense, according to the policies and forms currently in force with insurance carriers selected by the State's Risk Manager or issued by the State of Utah Risk Management Fund. The State of Utah's Risk Manager shall furnish, upon request, all parties in interest with copies of said policies authenticated by authorized agents of the insurers or the State of Utah's Risk Management Fund.

10.2.2 INSPECTIONS, RECOMMENDATIONS. DFCM, the Division of Risk Management and the Builder's Risk insurers shall have the right to inspect the Work. The Contractor shall comply with reasonable risk control recommendations made by insurers or the Division of Risk Management. Such inspections or recommendations do not relieve the Contractor of any of its responsibilities under the Contract Documents.

10.2.3 DEDUCTIBLE. The above described "Builders Risk" policies shall be subject to a total deductible of $5,000 per loss occurrence, which shall be assumed by all Contractors or Subcontractors, in proportion to their share of the total amount of an insured loss occurrence.

10.2.4 ADJUSTED WITH AND PAYABLE TO RISK MANAGER AS TRUSTEE. Any insured property loss is to be adjusted with the State of Utah Risk Manager, and made payable to the State of Utah Risk Manager as trustee for the Contractor and Subcontractors, as their interests may appear, subject to the requirements of any applicable loss payable clause.

10.2.5 WAIVER. Contractor, including all Subcontractors, and DFCM hereby waive all rights against each other for damages caused by

perils insured against under the "Builder's Risk" insurance provided by DFCM, except such rights as Contractor may have to the proceeds of such insurance held by the State of Utah's Risk Manager as trustee. The DFCM and the Contractor each shall require similar waivers from their contractors, subcontractors, subconsultants and agents, at any tier.

10.2.6 SPECIAL HAZARDS. DFCM shall bear the risk of loss, delay and/or damage due to earthquake and/or flood and may either insure or self-insure that risk. If the Contractor requests in writing that insurance for other special hazards be included in the "Builder's Risk" policy, the State of Utah's Risk Manager shall, if possible, include such insurance in the policy and the cost thereof shall be charged to the Contractor by Change Order.

10.3 PERFORMANCE BOND AND PAYMENT BOND. The Contractor shall submit and maintain in full force and effect as required by law and the Contract Documents, at its own expense, on forms provided by the Division of Facilities Construction and Management, and include as part of the quoted total all costs involved in securing and furnishing, the bonds listed below, based on the completed cost of the Contract and effective upon execution of the Contract. Said bonds shall be from surety companies which are authorized to do business in the State of Utah, listed in the U. S. Department of Treasury Circular 570, Companies Holding Certificates of Authority as Acceptable Sureties on Federal Bonds and as Acceptable Reinsuring Companies, and acting within the limitation listed therein.

10.3.1 A full 100 percent performance bond covering the faithful execution of the Contract in accordance with the Contract Documents; and

10.3.2 A full 100 percent payment bond covering payment of all obligations arising under the Contract Documents, for the protection of each person supplying labor, service, equipment, or material for the performance of the Work.

10.3.3 Any required insurance required under the U.S. Terrorism Risk Insurance Act of 2002, any similar applicable law, or as such Act may be amended.

ARTICLE 11. MISCELLANEOUS PROVISIONS.

11.1 A/E'S RESPONSIBILITIES.
These General Conditions are not intended to provide an exhaustive or complete list of the A/E's responsibilities. A separate agreement between the DFCM and A/E incorporates these General Conditions by reference and includes additional Design responsibilities.

11.2 SUCCESSORS AND ASSIGNS. The DFCM and Contractor respectively bind themselves, their partners, successors, assigns and legal representatives to the other party hereto and to partners, successors, assigns and legal representatives of such other party in respect to covenants, agreements and obligations contained in the Contract Documents. The Contractor shall not assign the Contract without the prior written consent of the DFCM, nor shall the Contractor assign any amount due or to become due as well as any rights under the Contract, without prior written consent of the DFCM.

11.3 WRITTEN NOTICE.

11.3.1 PERSONAL DELIVERY AND REGISTERED OR CERTIFIED MAIL. Written notice shall be deemed to have been duly served if delivered in person to the individual or a member of the firm or entity or to an officer of the corporation for which it was intended, or if delivered at or sent by registered or certified mail, return receipt requested, to the last business address known to the party giving notice.

11.3.2 FAX. Notwithstanding any other provision of these General Conditions, written notice shall also be deemed to have been duly served by verified use of a FAX system by using the known and operative calling number. Service by use of the FAX system is encouraged when timely notice will benefit the–DFCM, A/E or Contractor. Notice shall be considered complete and verified upon the sending and confirmation of delivery using the FAX system, if on the same day notice is also sent by registered or certified mail,

return receipt requested, to the last business address known to the party giving notice, confirming the FAX delivery.

11.4 RIGHTS AND REMEDIES.

11.4.1 NOT LIMIT. Duties and obligations imposed by the Contract Documents and rights and remedies available thereunder shall be in addition to and not a limitation of duties, obligations, rights and remedies otherwise imposed or available by law.

11.4.2 NOT WAIVER. Except as expressly provided elsewhere in the Contract Documents, no action or failure to act by the DFCM, A/E or Contractor shall constitute a waiver of a right or duty afforded them under the Contract Documents, nor shall such action or failure to act constitute approval or acquiescence in a breach thereunder, except as any of the above may be specifically agreed to in writing. In no case shall the Contractor or any Subcontractors be entitled to rely upon any waiver of any of these General Conditions unless agreed to in writing by the DFCM.

11.5 COMMENCEMENT OF STATUTORY LIMITATION PERIOD.

11.5.1 BEFORE SUBSTANTIAL COMPLETION. Except as provided in 11.5.4 below, as to acts or failures to act occurring prior to the relevant date of Substantial Completion, any applicable statute of limitations shall commence to run and any alleged cause of action shall be deemed to have accrued in any and all events not later than such date of Substantial Completion.

12.5.2 BETWEEN SUBSTANTIAL COMPLETION AND FINAL CERTIFICATION FOR PAYMENT. Except as provided in Paragraph 11.5.4 below, as to acts or failures to act occurring subsequent to the relevant date of Substantial Completion and prior to issuance of the final Certification for Payment, any applicable statute of limitations shall commence to run and any alleged cause of action shall be deemed to have accrued in any and all events not later than the date of issuance of the final Certification for Payment.

11.5.3 AFTER FINAL CERTIFICATION FOR PAYMENT. Except as provided in Paragraph 11.5.4 below, as to acts or failures to act occurring after the relevant date of issuance of the final Certificate for Payment, any applicable statute of limitations shall commence to run and any alleged cause of action shall be deemed to have accrued in any and all events not later than the date of any act or failure to act by the Contractor pursuant to any guaranty provided under Article 9 the date of any correction of the Work or failure to correct the Work by the Contractor under Paragraph 9.4.2, or the date of actual commission of any other act or failure to perform any duty or obligation by the Contractor or DFCM, whichever occurs last.

11.5.4 EXCEPTION. Notwithstanding any other provision of this Article 11.5 to the contrary, no applicable statute of limitations shall be deemed to have commenced with respect to any portion of the Work which is not in accordance with the requirements of the Contract Documents, which would not be visible or apparent upon conducting a reasonable investigation, and which is not discovered by the DFCM until after the date which, but for this Paragraph 11.5.4, would be the date of commencement of the applicable statute of limitations; the applicable statute of limitations instead shall be deemed to have commenced on the date of such discovery by the DFCM.

11.6 NOT DISCRIMINATE, NO SEXUAL HARASSMENT. Pursuant to the laws of the State of Utah, the Contractor, Subcontractors, or anyone for whose act any of them may be liable, will take affirmative action to not discriminate against any employee or applicant for employment because of race, creed, color, sex, religion, ancestry or national origin. To the extent applicable, said persons will comply with all provisions of Executive Order No. 11246 dated September 24, 1965 and rules, regulations, orders, instructions, designations and other directives promulgated pursuant thereto. Contractor, Subcontractors, or anyone for whose act any of them may be liable, shall not act in any manner as would violate the laws, regulations and policies of the United States or the State of Utah prohibiting sexual harassment.

11.7 APPLICABLE LAWS. The applicable laws and regulations of the State of Utah, as well as any applicable local laws and regulations not superseded or exempted by State law, shall govern the execution of the Work embodied in the Contract Documents as well as the interpretation of the Contract Documents.

11.8 INTERPRETATION. In the interest of brevity, the Contract Documents frequently omit modifying words such as "all" and "any" and articles such as "the" and "an", but the fact that a modification or an article is absent from the statement and appears in another is not intended to affect the interpretation of either statement.

11.9 VENUE. In case of any dispute, which may arise under the Contract Documents, the place of venue shall be in the County of Salt Lake, Utah, unless otherwise agreed to by all the parties in writing.

11.10 SEVERABILITY. The invalidity of any part, paragraph, subparagraph, phase, provision or aspect of the Contract documents shall not impair or affect in any manner the validity, enforceability or effect of the remainder of the Contract Documents.

11.11 CONSTRUCTION OF WORDS. Unless otherwise stated in the Contract Documents, words, which have well-known technical or construction industry meanings, shall be construed as having such recognized meanings. Unless the context requires otherwise, all other technical words shall be construed in accordance with the meaning normally established by the particular, applicable profession or industry. All other words, unless the context requires otherwise, shall be construed with an ordinary, plain meaning.

11.12 NO THIRD PARTY RIGHTS. These General Conditions create rights and duties only as between DFCM and Contractor, and DFCM and A/E. Nothing contained herein shall be deemed as creating third party beneficiary contract rights or other actionable rights or duties as between Contractor and A/E, or as between DFCM, Contractor, or A/E on the one hand, and any other person or entity.

ARTICLE 12. TERMINATION OR SUSPENSION OF THE CONTRACT.

12.1 TERMINATION BY CONTRACTOR.

12.1.1 IN GENERAL. If the Work is stopped for a period of sixty (60) days through no act or fault of the Contractor or a Subcontractor, or their agents or employees or any other persons performing portions of the Work under contract with any of the above, the Contractor, may terminate the Contract in accordance with 12.1.2 hereinbelow for any of the following reasons:

(1) Because the DFCM has persistently failed to fulfill fundamental DFCM's obligations under the Contract Documents with respect to matters important to the progress of the Work;

(2) Issuance of an order of a court or other public authority having jurisdiction which necessitates such termination, except that where the Contractor has standing, the Contractor must cooperate in efforts to stay and/or appeal such order;

(3) An act of government, such as a declaration of national emergency, making material unavailable; or

(4) Unavoidable casualties or other similar causes as listed in Paragraph 12.2.2(2) hereinbelow.

12.1.2 NOTICE. If one of the reasons for termination in Paragraph 12.1.1 hereinabove exist, the Contractor may, upon ten (10) additional days' written notice to the DFCM and A/E, and such condition giving cause for termination still not cured, terminate the Contract and recover from the DFCM payment for Work executed and for proven loss with respect to materials, equipment, tools, and construction equipment and machinery, including reasonable overhead, profit and damages associated only with work completed prior to the notice of termination.

12.2 TERMINATION BY THE DFCM FOR CAUSE.

12.2.1 IN GENERAL. The DFCM Director or Designee may terminate the Contract if the Contractor fails to cure any of the following within a period of ten (10) days (or longer if the DFCM so approves in writing) after receipt of notice from the DFCM specifying the cause for termination:

(1) The Contractor persistently or repeatedly refuses or fails to supply enough properly skilled workers or proper materials;

(2) The Contractor fails to make payment to Subcontractors for materials or labor in accordance with the respective agreements between the Contractor and the Subcontractors;

(3) The Contractor persistently disregards laws, ordinances, or rules, regulations, resolutions or orders of a public authority having jurisdiction; or

(4) The Contractor fails to perform the Work within the time specified in the Contract Documents or any authorized extension thereof or the Contractor fails to make progress with the Work as to endanger such compliance;

(5) The Contractor fails to perform the Work or is otherwise in breach of a material provision of the Contract Documents;

(6) The Contractor fails to respond promptly to the financial responsibility inquiry under the Contractor's Agreement;

(7) As permissible by law for a reason to terminate, the Contractor is adjudged bankrupt;

(8) As permissible by law for a reason to terminate, the Contractor should make a general assignment for the benefit to creditors;

(9) As permissible by law for a reason to terminate, the Contractor should have a receiver appointed on account of the Contractor's insolvency; or

(10) The Contractor fails to follow the material safety requirements and precautions either as expressly provided in the Contract Documents or as consistent with the customary practices in the industry.

12.2.2 DFCM'S RIGHT TO CARRY OUT THE WORK.

(1) If the Contractor defaults or neglects to carry out the Work in accordance with the Contract Documents and fails within a ten (10) day period (or longer if approved by the DFCM in writing) after receipt of written notice from the DFCM to cure such default or neglect, the DFCM may without prejudice to other remedies the DFCM may have, correct such deficiencies, including taking over the Work and prosecuting the same to completion, by contract or otherwise, and may take possession of, and utilize in completing the Work, such materials, appliances, and facilities as may be on the site of the Work as well as the site as necessary for its proper completion. In such case, the DFCM shall offset from payments then or thereafter due the Contractor the cost of correcting such deficiencies, including compensation for the A/E, DFCM's staff and legal counsel's additional services and expenses made necessary by such default, neglect or failure. If payments then or thereafter due the Contractor are not sufficient to cover such amounts, the Contractor shall pay the difference to the DFCM. The Contractor shall continue performance of the Contract to the extent not terminated.

(2) Except with respect to defaults of Subcontractors, the Contractor shall not be liable for any excess costs if the failure to perform the Contract arises out of causes beyond the control and without the fault or negligence of the Contractor or anyone for whom the Contractor may be liable. Such causes may include, but are not limited to, acts of God or of the public enemy, acts of the State of Utah or federal government in either their sovereign or contractual capacity, fires, floods, epidemics, quarantine restrictions, strikes, freight embargoes, and unusually severe weather; but in every case the failure to perform must be beyond the control and without the fault or negligence of the Contractor or anyone for whom the Contractor may be liable. If the failure to perform is caused by the default of a Subcontractor, and if such default arises out of causes beyond the control of both the Contractor

and the Subcontractor, and without the fault or negligence of either of them or anyone for whom either may be liable, the Contractor shall not be liable for any excess costs for failure to perform unless the supplies or services to be furnished by the Subcontractor were obtainable from other sources in sufficient time to permit the Contractor to meet the required delivery or completion schedule.

12.2.3 ITEMS REQUIRED TO BE TRANSFERRED OR DELIVERED. The DFCM may require the Contractor to transfer title and deliver to the DFCM, in the manner and to the extent directed by the DFCM:

(1) Any completed portion of the Work; and

(2) Any partially completed portion of the Work and any parts, tools, dies, jigs, fixtures, drawings, information, and contract rights (hereinafter called "construction materials") as the Contractor has specifically produced or specifically acquired for the performance of such part of this Contract as has been terminated; and the Contractor shall, upon direction of the DFCM, protect and preserve property in the possession of the Contractor in which the DFCM has an interest.

12.2.4 PAYMENT. When the DFCM terminates the Contract for one or more of the reasons stated in Paragraph 12.2.1, the DFCM may withhold payment and/or pursue all available remedies.

12.2.5 DFCM PROTECTION IF LIENABLE. When the subject property is lienable, the DFCM may withhold from amounts otherwise due the Contractor for such completed Work or construction materials such sum as the DFCM determines to be necessary to protect the State against loss because of outstanding liens or claims for former lien holders.

12.2.6 CREDITS AND DEFICITS. If the unpaid balance of the Contract Sum exceeds the full cost of finishing the Work, including compensation for the A/E's services and expenses made necessary thereby, such excess shall be paid to the Contractor. If such cost exceeds the unpaid balance, the Contractor shall pay the difference to the DFCM this obligation for payment shall survive the termination of the Contract.

12.2.7 IF CONTRACTOR FOUND NOT IN DEFAULT OR EXCUSABLE. If, after notice of termination of the Contract under the provisions of this Article, it is determined for any reason that the Contractor was not in default under the provisions of this Article, or that the default was excusable under the provisions of this Article, the rights and obligations of the parties shall be the same as if the notice of termination had been issued pursuant to the termination for convenience provisions.

12.2.8 RIGHTS AND REMEDIES NOT EXCLUSIVE. The rights and remedies of the DFCM provided in this Article 12.2 shall not be exclusive and are in addition to any other rights and remedies provided by law or under this Contract.

12.3 SUSPENSION, DELAY OR INTERRUPTION OF WORK BY THE DFCM FOR CONVENIENCE.

12.3.1 BY DFCM IN WRITING. The DFCM may in writing and without cause, order the Contractor to suspend, delay or interrupt the Work in whole or in part for such period of time as the DFCM may determine to be appropriate for the convenience of the DFCM.

12.3.2 TIME PERIOD FOR CLAIMS. Any PRE by the Contractor for adjustment under this Article 12.3 must be asserted by the Contractor, in writing, within twenty-one (21) days from the date of termination of such suspension, delay or interruption; provided that the DFCM may, in its sole discretion, receive and act upon any such PRE asserted at any time prior to final payment under this Contract.

12.3.3 ADJUSTMENTS. Any adjustment in Contract Sum and Time shall be in accordance with Articles 3, 4, and 7.

12.4 TERMINATION FOR CONVENIENCE OF THE DFCM.

12.4.1 IN GENERAL.

The performance of Work under this Contract may be terminated by the DFCM in accordance with this Article 12.4 in whole, or from time to time, in part, whenever the DFCM shall determine that such termination is in the best interest of the DFCM or any person for whom the DFCM is acting under this Contract. Any such termination shall be effected by delivery to the Contractor of a notice of termination specifying the extent to which performance of Work under the Contract is terminated, and the date upon which such termination becomes effective.

12.4.2 CONTRACTOR OBLIGATIONS. After receipt of a notice of termination, and except as otherwise directed by the DFCM in writing, the Contractor shall:

(1) Stop work under the Contract on the date and to the extent specified in the notice of termination;

(2) Place no further orders or subcontracts for materials, services or facilities, except as may be necessary for completion of such portion of the Work under the Contract as is not terminated;

(3) Terminate all orders and subcontracts to the extent that they relate to performance of Work terminated by the notice of termination;

(4) Assign to the DFCM in the manner, at the times, and to the extent directed by the DFCM, all of the right, title and interest of the Contractor under the orders and subcontracts so terminated, in which case the DFCM shall have the right, in its discretion, to settle or pay any or all claims arising out of the termination of such orders and subcontracts;

(5) Settle all outstanding liabilities and all claims arising out of such termination of orders and subcontracts, with the approval or ratification of the DFCM, which approval or ratification shall be final for all the purposes of this Article 12.4;

(6) Transfer title and deliver to the DFCM in the manner, at the times, and to the extent, if any, directed by the DFCM:

(a) The fabricated or unfabricated parts, work in process, completed work, supplies, and other material produced as a part of, or acquired in connection with the performance of the Work terminated by the notice of termination; and

(b) The completed or partially completed drawings, information, and other property which, if the Contract had been completed, would have been required to be furnished to the DFCM;

(7) Use best efforts to sell, in the manner, at the times, to the extent, and at the price or prices directed or authorized by the DFCM, any property of the types referred to in Paragraph 12.4.2(6) above; provided, however, that the Contractor:

(a) Shall not be required to extend credit to any purchaser; and

(b) May acquire any such property under the conditions prescribed by and at a price or prices approved by the DFCM; and provided further that the proceeds of any such transfer of or disposition shall be applied in reduction of any payments to be made by the DFCM to the Contractor under this Contract or shall otherwise be credited to the price or cost of the Work covered by this Contract or paid in such other manner as the DFCM may direct;

(8) Complete performance of such part of the Work as shall not have been terminated by the notice of termination; and

(9) Take such action as may be necessary, or as the DFCM may direct, for the protection and preservation of the property related to this Contract which is in the possession of the Contractor in which the State has or may acquire an interest.

12.4.3 TERMINATION CLAIM. After receipt of a notice of termination, the Contractor may submit to the DFCM a PRE, in the form and with certification prescribed by the DFCM. Such PRE shall be submitted promptly

but in no event not later than sixty (60) days from the effective date of termination.

12.4.4 AGREED UPON PAYMENT. Subject to the provisions of Paragraph 12.4.3 above, the Contractor and the DFCM may agree upon the amount to be paid to the Contractor by reason of the total or partial termination of Work pursuant to this Article 12.4.

12.4.5 PAYMENT NOT AGREED UPON. In the event of the failure of the Contractor and the DFCM to agree, as provided in Paragraph 12.4.4, upon the whole amount to be paid to the Contractor by reason of the termination of Work pursuant to this Article 12.4, the DFCM shall pay to the Contractor the amounts determined by the DFCM as follows, but without duplication of any amounts agreed upon in accordance with Paragraph 12.4.4:

(1) With respect to all Contract Work performed prior to effective date of the notice of termination, the total (without duplication of any items) of:

(a) The cost of such Work including undisputed Claim amounts;

(b) The cost of terminating, settling and paying claims arising out of the termination of Work under subcontracts or orders as provided in Paragraph 12.4.2(5) above, exclusive of the amounts paid or payable on account of supplies or materials delivered or services furnished by Subcontractors prior to the effective date of the notice of termination under this Contract, which amounts shall be included in the cost on account of which payment is made under Paragraph 12.4.5(1)(a) above;

(c) A sum, as overhead and profit on Paragraph 12.4.5(1)(a) above, determined by the DFCM to be fair and reasonable;

(d) The reasonable cost of the preservation and protection of property incurred pursuant to Paragraph 12.4.2(9); and any other reasonable cost incidental to termination of Work under this Contract, including expenses incidental to the determination of the amount due to the Contractor as the result of the termination of Work under this Contract.

(2) The total sum to be paid to the Contractor under Paragraph 12.4.5(1) above shall not exceed the total Contract Sum as reduced by the amount of payments otherwise made and as further reduced by the Contract price of work not terminated. Except for normal spoilage, and except to the extent that the DFCM shall have otherwise expressly assumed the risk of loss in writing, there shall be excluded from the amounts payable to the Contractor under Paragraph 12.4.5(1) above, the fair value of property which is destroyed, lost, stolen, or damaged so as to become undeliverable to the DFCM, or to a buyer pursuant to Paragraph 12.4.2(7).

12.4.6 DEDUCTIONS. In arriving at the amount due the Contractor under this Article 12.4, there shall be deducted:

(1) All unliquidated advance or other payments on account theretofore made to the Contractor, applicable to the terminated portion of this Contract;

(2) Any Claim which the State may have against the Contractor in connection with this Contract; and

(3) The agreed price for, or the proceeds of sale of, any materials, supplies, or other things acquired by the Contractor or sold, pursuant to the provisions of this Article 13.4, and not otherwise recovered by or credited to the DFCM.

12.4.7 PARTIAL TERMINATION. If the termination is partial, the Contractor may file with the DFCM a PRE for the amounts specified in the Contract relating to the continued portion of the Contract and such equitable adjustment as may be agreed upon shall be made in such amounts. Any PRE under this Paragraph 12.4.7 must be filed within twenty-one (21) days from the effective date of the notice of termination.

12.4.8 PARTIAL PAYMENTS. The DFCM may, from time to time, under such terms and conditions as it may prescribe, make partial payments and payments on account against costs

incurred by the Contractor in connection with the terminated portion of this Contract whenever, in the opinion of the DFCM the aggregate of such payments shall be within the amount to which the Contractor will be entitled hereunder. If the total of such payments is in excess of the amount finally agreed or determined to be due under this Article 12.4, such excess shall be payable by the Contractor to the DFCM upon demand, together with interest at a rate equal to the average rate at the time being received from the investment of state funds, as determined by the State Treasurer, for the period until the date such excess is repaid to the DFCM; provided, however, that no interest shall be charged with respect to any such excess payment attributable to a reduction in the Contractor's claim by reason of retention or other disposition of termination inventory until ten (10) days after the date of such retention or disposition, or such later date as determined by the DFCM by reason of the circumstances.

12.4.9 PRESERVE AND MAKE AVAILABLE RECORDS. Unless otherwise provided for in this Contract, or by applicable law, the Contractor shall, from the effective date of termination until the expiration of three years after final settlement under this Contract, preserve and make available to the DFCM at all reasonable times at the office of the Contractor, but without direct charge to the DFCM, all books, records, documents and other evidence bearing on the costs and expenses of the Contractor under this Contract and relating to the Work terminated hereunder, or, to the extent approved by the DFCM Representative, photographs, micrographs, or other authentic reproductions thereof.

12.5 DFCM'S RIGHT TO STOP THE WORK. If the Contractor fails to correct Work or fails to carry our Work, as required by the Contract Documents or fails to comply with all required and customary safety precautions; the DFCM, by written order signed personally or by an agent specifically so empowered by the DFCM in writing, may order the Contractor to stop the Work, or any portion thereof, until the cause for such order has been eliminated; however, the right of the DFCM to stop the Work shall not give rise to a duty on the part of the DFCM to exercise this right for the benefit of the Contractor or any other person or entity.

DIVISION 1 - GENERAL REQUIREMENTS

Section 01010	Summary of Work
Section 01090	Definitions and Standards
Section 01250	Contract Modification Procedures
Section 01270	Unit Prices
Section 01290	Payment Procedures
Section 01310	Project Management and Coordination
Section 01320	Construction Progress Documentation
Section 01330	Submittal Procedures
Section 01500	Temporary Facilities and Controls
Section 01600	Product Requirements
Section 01700	Execution Requirements
Section 01770	Closeout Procedures

SECTION 01010 - SUMMARY OF WORK October 3, 2006

PART 1 - GENERAL

1.1 SUMMARY

A. Requirements of DIVISION 0 - BIDDING REQUIREMENTS and DIVISION 1 - GENERAL REQUIREMENTS apply to every section contained in the Project Manual, and shall govern the execution of Work required by the Contract Documents.

B. Provide everything necessary for and incidental to proper and satisfactory completion of all Work specified and indicated or shown in the Contract Documents.

C. The Project consists of re-roofing of the Auto Trade Building at Dixie State College of Utah.

1.2 PROJECT LOCATION

A. Site for these projects is located on the campus of Dixie State College in St George, Utah.

1.3 CODES

A. Law of place of building governs. Conform to applicable requirements of the latest editions of the International Building Code, International Building Code Standards, International Mechanical Code, International Plumbing Code, National Electrical Code, National Fire Protection Association requirements, local ordinances, and UOSHA requirements applicable to this project, unless a higher standard is called for, without additional cost to the Owner.

1.4 CONTRACTOR USE OF PREMISES

A. General: During the construction period the Contractor shall have use of the premises for construction operations, including use of the site. The Contractor's use of the premises is limited by on-going operations of the University. The Contractor is responsible for coordinating the work of this Contract with the University for all on-going classes and scheduled special programs.

B. Use of the Site: Limit use of the premises to work in areas indicated. Confine operations to areas within contract limits indicated. Do not disturb portions of the site beyond the areas in which the Work is indicated.

1. Driveways and Entrances: Keep driveways and entrances serving the premises clear and available to the Owner, the Owner's employees, and emergency vehicles at all times. Do not use these areas for parking or storage of materials. Schedule deliveries to minimize space and time requirements for storage of materials and equipment on-site.
2. Do not unreasonably encumber the site with materials or equipment. Confine stockpiling of materials and location of storage sheds to the areas indicated. If additional storage is necessary obtain and pay for such storage off-site.
3. Lock automotive type vehicles such as passenger cars and trucks and other types of mechanized and motorized construction equipment, when parked and unattended, so as to prevent unauthorized use. Do not leave such vehicles or equipment unattended with the motor running or the ignition key in place.

C. The Owner will occupy the building during the course of construction.

1.5 DUST CONTROL

A. The Contractor shall be responsible to provide continuous (7 days per week, 24 hours per day) fugitive dust control measures within the limits of the construction site, related sites and adjacent streets and roads. Dust control shall be provided for, but not be specifically limited to, stockpiles, and all other areas which become potential sources of dust as a result of construction activities.

B. Contractor=s dust control measures shall maintain compliance with the General Utah Air Pollution Regulations, R446 - Utah Air Conservation Regulations, Section 4.5, Fugitive Emissions, applicable County Air Pollution Control Ordinances, and as directed by the Architect. Dust control measures shall include but not be limited to the following:
   1. Wetting of surfaces with water as appropriate.
   2. Minimizing surface disturbances.

C. In order to control fugitive dust emissions, Contractor shall apply the following procedures and techniques:
   1. Cover loads of materials, debris and waste materials taken from construction sites as needed to suppress dust during transit.
   2. Water down or apply other approved dust control measures to the construction site, haul roads and public access roads as needed to suppress dust.
   3. All mud and dirt shall be removed from vehicles prior to entering a paved or graveled area or road. Any mud or dirt that is carried out onto paved or graveled surfaces shall be removed from surfaces immediately and no less than daily.

1.6 SMOKE AND ODOR CONTROL

A. The Contractor shall be responsible to provide continuous smoke and odor control measures within the limits of the construction site. Smoke and odor control shall be provided for, but not be specifically limited to, asphalt kettles, welding equipment, and all other activities which become potential sources of smoke or odor as a result of construction activities.

B. In order to control smoke and odors, the Contractor shall apply the following procedures and techniques.
   1. Locate asphalt kettles and equipment away from all windows.
   2. Locate asphalt kettles and equipment away from any mechanical equipment.
   3. Locate asphalt kettles and equipment Adown-wind@ of any portion of the building.

C. If directed by the Architect or University Officials, the Contractor shall immediately relocate any equipment which is producing smoke or odors away from the building.

1.7 INCIDENTAL WORK

A. Any work, materials or equipment that may reasonably be inferred from the Contract Documents as being required to produce the intended result shall be supplied by the Contractor at no additional cost to the owner whether or not specifically called for.

PART 2 - PRODUCTS

Not applicable

PART 3 - EXECUTION

Not applicable

END OF SECTION 01010

SECTION 01090 - DEFINITIONS AND STANDARDS October 3, 2006

PART 1 - GENERAL

1.1 SUMMARY

A. Definitions: Basic Contract definitions are included in the General Conditions.

1. Directed: Terms such as "directed", "requested", "authorized", "selected", "approved", "required", and "permitted" mean "directed by the Architect", "requested by the Architect", and similar phrases. However, no implied meaning shall be interpreted to extend the Architect's responsibility into the Contractor's area of construction supervision.
2. Approve: The term "approved," where used in conjunction with the Architect's action on the Contractor's submittals, applications, and requests, is limited to the duties and responsibilities of the Architect as stated in General and Supplementary Conditions. Such approval shall not release the Contractor from responsibility to fulfill Contract requirements unless otherwise provided in the Contract Documents.
3. Furnish: The term "furnish" is used to mean "supply and deliver to the Project site, ready for unloading, unpacking, assembly, installation, and similar operations."
4. Install: The term "install" is used to describe operations at project site including the actual "unloading, unpacking, assembly, erection, placing, anchoring, applying, working to dimension, finishing, curing, protecting, cleaning, and similar operations."
5. Provide: The term "provide" means "to furnish and install, complete and ready for the intended use."

B. Specification Format and Conventions:

1. Specification Format: The Specifications are organized into Divisions and Sections using the 16-division format and CSI/CSC=s AMasterFormat@ numbering system.
   a. Section Identification: The Specifications use section numbers and titles to help cross-referencing in the Contract Documents. Sections in the Project Manual are in numeric sequence; however, the sequence is incomplete. Consult the table of contents at the beginning of the Project Manual to determine numbers and names of sections in the Contract Documents.
2. Specification Content: The Specifications use certain conventions for style of language and the intended meaning of terms, words, and phrases when used in particular situations. These conventions are as follows.
   a. Abbreviated Language: Language used in the Specifications and other Contract Documents is abbreviated. Words and meanings shall be interpreted as appropriate. Words implied, but not stated shall be inferred as the sense requires. Singular words shall be interpreted as plural, and plural words shall be interpreted as singular where applicable as the context of the Contract Documents indicates.
   b. Imperetive mood and streamlined language are generally used in the Specifications. Requirements expressed in the imperative mood are to be performed by Contractor. Occasionally, hte indicative or subjunctive mood may be used in the Section Text for clarity to describe responsibilities that must be fulfilled indirectly by Contractor or by others when so noted.
      1) The words Ashall,@ Ashall be,@ or Ashall comply with,@ depending on the context, are implied where a colon (:) is used within a sentence or phrase.

C. Drawing Symbols:

1. Graphic symbols: Where not otherwise noted, symbols are defined by "Architectural Graphic Standards," published by John Wiley & Sons, Inc., eighth edition.
   a. Mechanical/Electrical Drawings: Graphic symbols used on mechanical and electrical Drawings are generally aligned with symbols recommended by ASHRAE. Where appropriate, they are supplemented by more specific symbols recommended by technical associations including ASME, ASPE, IEEE, and similar organizations. Refer instances of uncertainty to the Architect for clarification before proceeding.

D. Industry Standards:

1. Applicability of Standards: Except where the Contract Documents include more stringent requirements, applicable construction industry standards have the same force and effect as if bound or copied directly into the Contract Documents. Such standards are made a part of the Contract Documents by reference. Individual Sections indicate which codes and standards the Contractor must keep available at the Project Site for reference.
2. Publication Dates: Where the date of issue of a referenced standard is not specified, comply with the standard in effect as of date of Contract Documents.
3. Conflicting Requirements: Where compliance with two or more standards is specified, and they establish different or conflicting requirements for minimum quantities or quality levels, the most stringent requirement will be enforced, unless the Contract Documents indicate otherwise. Refer requirements that are different, but apparently equal, and uncertainties as to which quality level is more stringent to the Architect for a decision before proceeding.
4. Copies of Standards: Each entity engaged in construction on the Project is required to be familiar with industry standards applicable to that entity's construction activity. Copies of applicable standards are not bound with the Contract Documents.
   a. Where copies of standards are needed for performance of a required construction activity, the Contractor shall obtain copies directly from the publication source.
   b. Although copies of standards needed for enforcement of requirements also may, be included as part of required submittals, the Architect reserves the right to require the Contractor to submit additional copies as necessary for enforcement of requirements.
5. Abbreviations and Names: Trade association names and titles of general standards are frequently abbreviated. Where such acronyms or abbreviations are used in the Specifications or other Contract Documents, they mean the recognized name of the trade association, standards generating organization, authority having jurisdiction, or other entity applicable to the context of the text provision.
   a. A copy of the CSI directory of Construction Industry Associations, Societies, and Institutes, and Abbreviations is on file in the office of the Architect.

END OF SECTION 01090

SECTION 01250 - CONTRACT MODIFICATION PROCEDURES October 3, 2006

PART 1 - GENERAL

1.1 RELATED DOCUMENTS

A. Drawings and general provisions of the Contract, including General and Supplementary Conditions and other Division 1 Specification Sections, apply to this Section.

1.2 SUMMARY

A. This Section specifies administrative and procedural requirements for handling and processing Contract modifications.

B. Related Sections include the following:
   1. Division 1 Section "Product Requirements" for administrative procedures for handling requests for substitutions made after Contract award.

1.3 MINOR CHANGES IN THE WORK

A. Architect will issue supplemental instructions authorizing Minor Changes in the Work, not involving adjustment to the Contract Sum or the Contract Time, on AIA Document G710, "Architect's Supplemental Instructions."

1.4 PROPOSAL REQUESTS

A. Owner-Initiated Proposal Requests: Architect will issue a detailed description of proposed changes in the Work that may require adjustment to the Contract Sum or the Contract Time. If necessary, the description will include supplemental or revised Drawings and Specifications.
   1. Proposal Requests issued by Architect are for information only. Do not consider them instructions either to stop work in progress or to execute the proposed change.
   2. Within time specified in Proposal Request after receipt of Proposal Request, submit a quotation estimating cost adjustments to the Contract Sum and the Contract Time necessary to execute the change.
      a. Include a list of quantities of products required or eliminated and unit costs, with total amount of purchases and credits to be made. If requested, furnish survey data to substantiate quantities.
      b. Indicate applicable taxes, delivery charges, equipment rental, and amounts of trade discounts.
      c. Include an updated Contractor's Construction Schedule that indicates the effect of the change, including, but not limited to, changes in activity duration, start and finish times, and activity relationship. Use available total float before requesting an extension of the Contract Time.

B. Contractor-Initiated Proposals: If latent or unforeseen conditions require modifications to the Contract, Contractor may propose changes by submitting a request for a change Architect.
   1. Include a statement outlining reasons for the change and the effect of the change on the Work. Provide a complete description of the proposed change. Indicate the effect of the proposed change on the Contract Sum and the Contract Time.
   2. Include a list of quantities of products required or eliminated and unit costs, with total amount of purchases and credits to be made. If requested, furnish survey data to

substantiate quantities.

3. Indicate applicable taxes, delivery charges, equipment rental, and amounts of trade discounts.
4. Include an updated Contractor's Construction Schedule that indicates the effect of the change, including, but not limited to, changes in activity duration, start and finish times, and activity relationship. Use available total float before requesting an extension of the Contract Time.
5. Comply with requirements in Division 1 Section "Product Requirements" if the proposed change requires substitution of one product or system for product or system specified.

C. Proposal Request Form: Use AIA Document G709 for Proposal Requests.

1.5 CHANGE ORDER PROCEDURES

A. On Owner's approval of a Proposal Request, Architect will issue a Change Order for signatures of Owner and Contractor on AIA Document G701.

1.6 CONSTRUCTION CHANGE DIRECTIVE

A. Construction Change Directive: Architect may issue a Construction Change Directive on AIA Document G714. Construction Change Directive instructs Contractor to proceed with a change in the Work, for subsequent inclusion in a Change Order.
   1. Construction Change Directive contains a complete description of change in the Work. It also designates method to be followed to determine change in the Contract Sum or the Contract Time.

B. Documentation: Maintain detailed records on a time and material basis of work required by the Construction Change Directive.
   1. After completion of change, submit an itemized account and supporting data necessary to substantiate cost and time adjustments to the Contract.

PART 2 - PRODUCTS

(Not Used)

PART 3 - EXECUTION

(Not Used)

END OF SECTION 01250

SECTION 01290 - PAYMENT PROCEDURES October 3, 2006

PART 1 - GENERAL

1.1 RELATED DOCUMENTS

A. Drawings and general provisions of the Contract, including General and Supplementary Conditions and other Division 1 Specification Sections, apply to this Section.

1.2 SUMMARY

A. This Section specifies administrative and procedural requirements necessary to prepare and process Applications for Payment.

B. Related Sections include the following:
1. Division 1 Section "Contract Modification Procedures" for administrative procedures for handling changes to the Contract.
2. Division 1 Section "Construction Progress Documentation" for administrative requirements governing preparation and submittal of Contractor's Construction Schedule and Submittals Schedule.

1.3 DEFINITIONS

A. Schedule of Values: A statement furnished by Contractor allocating portions of the Contract Sum to various portions of the Work and used as the basis for reviewing Contractor's Applications for Payment.

1.4 SCHEDULE OF VALUES

A. Coordination: Coordinate preparation of the Schedule of Values with preparation of Contractor's Construction Schedule.
1. Correlate line items in the Schedule of Values with other required administrative forms and schedules, including the following:
   a. Application for Payment forms with Continuation Sheets.
   b. Submittals Schedule.
2. Submit the Schedule of Values to Architect at earliest possible date but no later than seven days before the date scheduled for submittal of initial Applications for Payment.
3. Subschedules: Where the Work is separated into phases requiring separately phased payments, provide subschedules showing values correlated with each phase of payment.

B. Format and Content: Use the Project Manual table of contents as a guide to establish line items for the Schedule of Values. Provide at least one line item for each Specification Section.
1. Identification: Include the following Project identification on the Schedule of Values:
   a. Project name and location.
   b. Name of Architect.
   c. Architect's project number.
   d. Contractor's name and address.
   e. Date of submittal.
2. Arrange the Schedule of Values in tabular form with separate columns to indicate the

following for each item listed:

a. Related Specification Section or Division.
b. Description of the Work.
c. Name of subcontractor.
d. Name of manufacturer or fabricator.
e. Name of supplier.
f. Change Orders (numbers) that affect value.
g. Dollar value.
   1) Percentage of the Contract Sum to nearest one-hundredth percent, adjusted to total 100 percent.

3. Provide a breakdown of the Contract Sum in enough detail to facilitate continued evaluation of Applications for Payment and progress reports. Coordinate with the Project Manual table of contents. Provide several line items for principal subcontract amounts, where appropriate.
4. Round amounts to nearest whole dollar; total shall equal the Contract Sum.
5. Provide a separate line item in the Schedule of Values for each part of the Work where Applications for Payment may include materials or equipment purchased or fabricated and stored, but not yet installed.
   a. Differentiate between items stored on-site and items stored off-site. Include evidence of insurance or bonded warehousing if required.
6. Provide separate line items in the Schedule of Values for initial cost of materials, for each subsequent stage of completion, and for total installed value of that part of the Work.
7. Each item in the Schedule of Values and Applications for Payment shall be complete. Include total cost and proportionate share of general overhead and profit for each item.
   a. Temporary facilities and other major cost items that are not direct cost of actual work-in-place may be shown either as separate line items in the Schedule of Values or distributed as general overhead expense, at Contractor's option.
8. Schedule Updating: Update and resubmit the Schedule of Values before the next Applications for Payment when Change Orders or Construction Change Directives result in a change in the Contract Sum.

1.5 APPLICATIONS FOR PAYMENT

A. Each Application for Payment shall be consistent with previous applications and payments as certified by Architect and paid for by Owner.
   1. Initial Application for Payment, Application for Payment at time of Substantial Completion, and final Application for Payment involve additional requirements.

B. Payment Application Times: The date for each progress payment is indicated in the Agreement between Owner and Contractor. The period of construction Work covered by each Application for Payment is the period indicated in the Agreement.

C. Payment Application Forms: Use AIA Document G702 and AIA Document G703 Continuation Sheets as form for Applications for Payment.

D. Application Preparation: Complete every entry on form. Notarize and execute by a person authorized to sign legal documents on behalf of Contractor. Architect will return incomplete applications without action.
   1. Entries shall match data on the Schedule of Values and Contractor's Construction Schedule. Use updated schedules if revisions were made.

2. Include amounts of Change Orders and Construction Change Directives issued before last day of construction period covered by application.

E. Transmittal: Submit 4 signed and notarized original copies of each Application for Payment to Architect by a method ensuring receipt within 24 hours. One copy shall include waivers of lien and similar attachments if required.
   1. Transmit each copy with a transmittal form listing attachments and recording appropriate information about application.

F. Waivers of Mechanic's Lien: With each Application for Payment, submit waivers of mechanic's liens from subcontractors, sub-subcontractors, and suppliers for construction period covered by the previous application.
   1. Submit partial waivers on each item for amount requested, before deduction for retainage, on each item.
   2. When an application shows completion of an item, submit final or full waivers.
   3. Owner reserves the right to designate which entities involved in the Work must submit waivers.
   4. Waiver Delays: Submit each Application for Payment with Contractor's waiver of mechanic's lien for construction period covered by the application.
      a. Submit final Application for Payment with or preceded by final waivers from every entity involved with performance of the Work covered by the application who is lawfully entitled to a lien.
   5. Waiver Forms: Submit waivers of lien on forms, executed in a manner acceptable to Owner.

G. Initial Application for Payment: Administrative actions and submittals that must precede or coincide with submittal of first Application for Payment include the following:
   1. List of subcontractors.
   2. Schedule of Values.
   3. Contractor's Construction Schedule (preliminary if not final).
   4. Products list.
   5. Schedule of unit prices.
   6. Submittals Schedule (preliminary if not final).
   7. List of Contractor's staff assignments.
   8. List of Contractor's principal consultants.
   9. Copies of building permits.
   10. Copies of authorizations and licenses from authorities having jurisdiction for performance of the Work.
   11. Initial progress report.
   12. Report of preconstruction conference.
   13. Certificates of insurance and insurance policies.
   14. Performance and payment bonds.
   15. Data needed to acquire Owner's insurance.
   16. Initial settlement survey and damage report if required.

H. Application for Payment at Substantial Completion: After issuing the Certificate of Substantial Completion, submit an Application for Payment showing 100 percent completion for portion of the Work claimed as substantially complete.
   1. Include documentation supporting claim that the Work is substantially complete and a statement showing an accounting of changes to the Contract Sum.
   2. This application shall reflect Certificates of Partial Substantial Completion issued previously for Owner occupancy of designated portions of the Work.

I. Final Payment Application: Submit final Application for Payment with releases and supporting documentation not previously submitted and accepted, including, but not limited, to the following:
   1. Evidence of completion of Project closeout requirements.
   2. Insurance certificates for products and completed operations where required and proof that taxes, fees, and similar obligations were paid.
   3. Updated final statement, accounting for final changes to the Contract Sum.
   4. AIA Document G706, "Contractor's Affidavit of Payment of Debts and Claims."
   5. AIA Document G706A, "Contractor's Affidavit of Release of Liens."
   6. AIA Document G707, "Consent of Surety to Final Payment."
   7. Evidence that claims have been settled.
   8. Final meter readings for utilities, a measured record of stored fuel, and similar data as of date of Substantial Completion or when Owner took possession of and assumed responsibility for corresponding elements of the Work.
   9. Final, liquidated damages settlement statement.

PART 2 - PRODUCTS

(Not Used)

PART 3 - EXECUTION

(Not Used)

END OF SECTION 01290

SECTION 01310 - PROJECT MANAGEMENT AND COORDINATION October 3, 2006

PART 1 - GENERAL

1.1 RELATED DOCUMENTS

A. Drawings and general provisions of the Contract, including General and Supplementary Conditions and other Division 1 Specification Sections, apply to this Section.

1.2 SUMMARY

A. This Section includes administrative provisions for coordinating construction operations on Project including, but not limited to, the following:
   1. General project coordination procedures.
   2. Conservation.
   3. Coordination Drawings.
   4. Administrative and supervisory personnel.
   5. Project meetings.

B. Each contractor shall participate in coordination requirements. Certain areas of responsibility will be assigned to a specific contractor.

C. Related Sections: The following Sections contain requirements that relate to this Section:
   1. Division 1 Section "Construction Progress Documentation" for preparing and submitting the Contractor's Construction Schedule.
   2. Division 1 Section "Execution Requirements" for procedures for coordinating general installation and field-engineering services, including establishment of benchmarks and control points.
   3. Division 1 Section "Closeout Procedures" for coordinating Contract closeout.

1.3 COORDINATION

A. Coordination: Coordinate construction operations included in various Sections of the Specifications to ensure efficient and orderly installation of each part of the Work. Coordinate construction operations, included in different Sections, that depend on each other for proper installation, connection, and operation.
   1. Schedule construction operations in sequence required to obtain the best results where installation of one part of the Work depends on installation of other components, before or after its own installation.
   2. Coordinate installation of different components with other contractors to ensure maximum accessibility for required maintenance, service, and repair.
   3. Make adequate provisions to accommodate items scheduled for later installation.

B. If necessary, prepare memoranda for distribution to each party involved, outlining special procedures required for coordination. Include such items as required notices, reports, and list of attendees at meetings.
   1. Prepare similar memoranda for Owner and separate contractors if coordination of their Work is required.

C. Administrative Procedures: Coordinate scheduling and timing of required administrative procedures with other construction activities and activities of other contractors to avoid conflicts and to ensure orderly progress of the Work. Such administrative activities include,

but are not limited to, the following:

1. Preparation of Contractor's Construction Schedule.
2. Preparation of the Schedule of Values.
3. Installation and removal of temporary facilities and controls.
4. Delivery and processing of submittals.
5. Progress meetings.
6. Preinstallation conferences.
7. Project closeout activities.

D. Conservation: Coordinate construction activities to ensure that operations are carried out with consideration given to conservation of energy, water, and materials.

1. Salvage materials and equipment involved in performance of, but not actually incorporated into, the Work.

1.4 SUBMITTALS

A. Coordination Drawings: Prepare Coordination Drawings if limited space availability necessitates maximum utilization of space for efficient installation of different components or if coordination is required for installation of products and materials fabricated by separate entities.

1. Indicate relationship of components shown on separate Shop Drawings.
2. Indicate required installation sequences.
3. Refer to Division 15 Section "Basic Mechanical Materials and Methods" and Division 16 Section "Basic Electrical Materials and Methods" for specific Coordination Drawing requirements for mechanical and electrical installations.

B. Key Personnel Names: Within 5 days of starting construction operations, submit a list of principal staff assignments, including superintendent and other personnel in attendance at Project site. Identify individuals and their duties and responsibilities; list addresses and telephone numbers, including home and office telephone numbers. Provide names, addresses, and telephone numbers of individuals assigned as standbys in the absence of individuals assigned to Project.

1. Post copies of list in Project meeting room, in temporary field office, and by each temporary telephone.
2. Contractor shall not change the project superintendent, prior to Substantial Completion, without notification and approval of Architect and Owner.

1.5 ADMINISTRATIVE AND SUPERVISORY PERSONNEL

A. General: In addition to Project superintendent, provide other administrative and supervisory personnel as required for proper performance of the Work.

1. Include special personnel required for coordination of operations with other contractors.

1.6 PROJECT MEETINGS

A. General: Schedule and conduct meetings and conferences at Project site, unless otherwise indicated.

1. Attendees: Inform participants and others involved, and individuals whose presence is required, of date and time of each meeting. Notify Owner and Architect of scheduled meeting dates and times.
2. Agenda: Prepare the meeting agenda. Distribute the agenda to all invited attendees.

3. Minutes: Record significant discussions and agreements achieved. Distribute the meeting minutes to everyone concerned, including Owner and Architect, within 3 days of the meeting.

B. Pre-Bid Conference: A mandatory pre-bid conference may be held prior to the scheduled bid date for this project. This conference shall be held at the Project site or another convenient location.

1. Attendees: Authorized representatives of Owner, Architect, and their consultants; Contractor and its superintendent; major subcontractors; Roofing Manufacturer's Field representative; other manufacturers; suppliers; and other concerned parties shall attend the conference. All participants at the conference shall be familiar with Project and authorized to conclude matters relating to the Work.

C. Preconstruction Conference: Schedule a mandatory preconstruction conference before starting construction, at a time convenient to Owner and Architect, but no later than 15 days after execution of the Agreement. Hold the conference at Project site or another convenient location. Conduct the meeting to review responsibilities and personnel assignments.

1. Attendees: Authorized representatives of Owner, Architect, and their consultants; Contractor and its superintendent; major subcontractors; Roofing Manufacturer's Field representative; other manufacturers; suppliers; and other concerned parties shall attend the conference. All participants at the conference shall be familiar with Project and authorized to conclude matters relating to the Work.
2. Agenda: Discuss items of significance that could affect progress, including the following:
   a. Tentative construction schedule.
   b. Phasing.
   c. Critical work sequencing.
   d. Designation of responsible personnel.
   e. Procedures for processing field decisions and Change Orders.
   f. Procedures for processing Applications for Payment.
   g. Distribution of the Contract Documents.
   h. Submittal procedures.
   i. Preparation of Record Documents.
   j. Use of the premises.
   k. Responsibility for temporary facilities and controls.
   l. Parking availability.
   m. Office, work, and storage areas.
   n. Equipment deliveries and priorities.
   o. First aid.
   p. Security.
   q. Progress cleaning.
   r. Working hours.

D. Preinstallation Conferences: Conduct a preinstallation conference at Project site before each construction activity that requires coordination with other construction. Including, but no limited to: Demolition, concrete, masonry, excavation, mechanical, plumbing, electrical, steel erection and stud framing, roofing drywall and finish work.

1. Attendees: Installer and representatives of manufacturers and fabricators involved in or affected by the installation and its coordination or integration with other materials and installations that have preceded or will follow, shall attend the meeting. Advise Architect of scheduled meeting dates.
2. Agenda: Review progress of other construction activities and preparations for the particular activity under consideration, including requirements for the following:

a. Contract Documents.
b. Options.
c. Related Change Orders.
d. Purchases.
e. Deliveries.
f. Submittals.
g. Review of mockups.
h. Possible conflicts.
i. Compatibility problems.
j. Time schedules.
k. Weather limitations.
l. Manufacturer's written recommendations.
m. Warranty requirements.
n. Compatibility of materials.
o. Acceptability of substrates.
p. Temporary facilities and controls.
q. Space and access limitations.
r. Regulations of authorities having jurisdiction.
s. Testing and inspecting requirements.
t. Required performance results.
u. Protection of construction and personnel.

3. Record significant conference discussions, agreements, and disagreements.
4. Do not proceed with installation if the conference cannot be successfully concluded. Initiate whatever actions are necessary to resolve impediments to performance of the Work and reconvene the conference at earliest feasible date.

E. Progress Meetings: Conduct progress meetings at weekly intervals. Coordinate dates of meetings with preparation of payment requests.

1. Attendees: In addition to representatives of Owner and Architect, each contractor, subcontractor, supplier, and other entity concerned with current progress or involved in planning, coordination, or performance of future activities shall be represented at these meetings, including the Roofing Manufacturer’s Field representative. All participants at the conference shall be familiar with Project and authorized to conclude matters relating to the Work.
2. Agenda: Review and correct or approve minutes of previous progress meeting. Review other items of significance that could affect progress. Include topics for discussion as appropriate to status of Project.
   a. Contractor's Construction Schedule: Review progress since the last meeting. Determine whether each activity is on time, ahead of schedule, or behind schedule, in relation to Contractor's Construction Schedule. Determine how construction behind schedule will be expedited; secure commitments from parties involved to do so. Discuss whether schedule revisions are required to ensure that current and subsequent activities will be completed within the Contract Time.
   b. Review present and future needs of each entity present, including the following:
      1) Interface requirements.
      2) Sequence of operations.
      3) Status of submittals.
      4) Deliveries.
      5) Off-site fabrication.
      6) Access.
      7) Site utilization.

8) Temporary facilities and controls.
9) Work hours.
10) Hazards and risks.
11) Progress cleaning.
12) Quality and work standards.
13) Change Orders.
14) Documentation of information for payment requests.

3. Reporting: Distribute minutes of the meeting to each party present and to parties who should have been present. Include a brief summary, in narrative form, of progress since the previous meeting and report.
   a. Schedule Updating: Revise Contractor's Construction Schedule after each progress meeting where revisions to the schedule have been made or recognized. Issue revised schedule concurrently with the report of each meeting.

PART 2 - PRODUCTS

(Not Used)

PART 3 - EXECUTION

(Not Used)

END OF SECTION 01310

SECTION 01320 - CONSTRUCTION PROGRESS DOCUMENTATION October 3, 2006

PART 1 - GENERAL

1.1 RELATED DOCUMENTS

A. Drawings and general provisions of the Contract, including General and Supplementary Conditions and other Division 1 Specification Sections, apply to this Section.

1.2 SUMMARY

A. This Section includes administrative and procedural requirements for documenting the progress of construction during performance of the Work, including the following:
   1. Contractor's Construction Schedule.
   2. Submittals Schedule.
   3. Daily construction reports.
   4. Material location reports.
   5. Field condition reports.
   6. Special reports.

B. Related Sections include the following:
   1. Division 1 Section "Project Management and Coordination" for submitting and distributing meeting and conference minutes.
   2. Division 1 Section "Submittal Procedures" for submitting schedules and reports.
   3. Division 1 Section "Quality Requirements" for submitting a schedule of tests and inspections.

1.3 DEFINITIONS

A. Activity: A discrete part of a project that can be identified for planning, scheduling, monitoring, and controlling the construction project. Activities included in a construction schedule consume time and resources.
   1. Critical activities are activities on the critical path. They must start and finish on the planned early start and finish times.
   2. Predecessor Activity: An activity that precedes another activity in the network.
   3. Successor Activity: An activity that follows another activity in the network.

B. Cost Loading: The allocation of the Schedule of Values for the completion of an activity as scheduled. The sum of costs for all activities must equal the total Contract Sum, unless otherwise approved by Architect.

C. CPM: Critical path method, which is a method of planning and scheduling a construction project where activities are arranged based on activity relationships. Network calculations determine when activities can be performed and the critical path of Project.

D. Critical Path: The longest connected chain of interdependent activities through the network schedule that establishes the minimum overall Project duration and contains no float.

E. Event: The starting or ending point of an activity.

F. Float: The measure of leeway in starting and completing an activity.
   1. Float time is not for the exclusive use or benefit of either Owner or Contractor, but is

a jointly owned, expiring Project resource available to both parties as needed to meet schedule milestones and Contract completion date.

2. Free float is the amount of time an activity can be delayed without adversely affecting the early start of the successor activity.
3. Total float is the measure of leeway in starting or completing an activity without adversely affecting the planned Project completion date.

G. Fragnet: A partial or fragmentary network that breaks down activities into smaller activities for greater detail.

H. Major Area: A story of construction, a separate building, or a similar significant construction element.

I. Milestone: A key or critical point in time for reference or measurement.

J. Network Diagram: A graphic diagram of a network schedule, showing activities and activity relationships.

K. Resource Loading: The allocation of manpower and equipment necessary for the completion of an activity as scheduled.

1.4 SUBMITTALS

A. Submittals Schedule: Submit three copies of schedule. Arrange the following information in a tabular format:
1. Scheduled date for first submittal.
2. Specification Section number and title.
3. Submittal category (action or informational).
4. Name of subcontractor.
5. Description of the Work covered.
6. Scheduled date for Architect's and Construction Manager's final release or approval.

B. Contractor's Construction Schedule: Submit two opaque copies of initial schedule, large enough to show entire schedule for entire construction period.

C. CPM Reports: Concurrent with CPM schedule, submit three copies of each of the following computer-generated reports. Format for each activity in reports shall contain activity number, activity description, original duration, remaining duration, early start date, early finish date, late start date, late finish date, and total float in calendar days.
1. Activity Report: List of all activities sorted by activity number and then early start date, or actual start date if known.
2. Total Float Report: List of all activities sorted in ascending order of total float.
3. Earnings Report: Compilation of Contractor's total earnings from commencement of the Work until most recent Application for Payment.

D. Daily Construction Reports: Submit one copy at weekly intervals.

E. Roofing Manufacturer’s Field Reports: Submit one copy at weekly intervals.

F. Material Location Reports: Submit two copies at monthly intervals.

G. Field Condition Reports: Submit two copies at time of discovery of differing conditions.

H. Special Reports: Submit two copies at time of unusual event.

1.5 COORDINATION

A. Coordinate preparation and processing of schedules and reports with performance of construction activities and with scheduling and reporting of separate contractors.

B. Coordinate Contractor's Construction Schedule with the Schedule of Values, list of subcontracts, Submittals Schedule, progress reports, payment requests, and other required schedules and reports.
   1. Secure time commitments for performing critical elements of the Work from parties involved.
   2. Coordinate each construction activity in the network with other activities and schedule them in proper sequence.

PART 2 - PRODUCTS

2.1 SUBMITTALS SCHEDULE

A. Preparation: Submit a schedule of submittals, arranged in chronological order by dates required by construction schedule. Include time required for review, resubmittal, ordering, manufacturing, fabrication, and delivery when establishing dates.
   1. Coordinate Submittals Schedule with list of subcontracts, the Schedule of Values, and Contractor's Construction Schedule.
   2. Initial Submittal: Submit concurrently with preliminary bar-chart schedule or network diagram. Include submittals required during the first 60 days of construction. List those required to maintain orderly progress of the Work and those required early because of long lead time for manufacture or fabrication.
   3. Final Submittal: Submit concurrently with the first complete submittal of Contractor's Construction Schedule.

2.2 REPORTS

A. Daily Construction Reports: Prepare a daily construction report recording the following information concerning events at Project site:
   1. List of subcontractors at Project site.
   2. List of separate contractors at Project site.
   3. Approximate count of personnel at Project site.
   4. Equipment at Project site.
   5. Major material deliveries.
   6. High and low temperatures and general weather conditions.
   7. Accidents.
   8. Meetings and significant decisions.
   9. Unusual events (refer to special reports).
   10. Stoppages, delays, shortages, and losses.
   11. Meter readings and similar recordings.
   12. Emergency procedures.
   13. Orders and requests of authorities having jurisdiction.
   14. Change Orders received and implemented.
   15. Construction or Work Change Directives received and implemented.
   16. Services connected and disconnected.
   17. Equipment or system tests and startups.

18. Partial Completions and occupancies.
19. Substantial Completions authorized.

B. Material Location Reports: At monthly intervals, prepare and submit a comprehensive list of materials delivered to and stored at Project site. List shall be cumulative, showing materials previously reported plus items recently delivered. Include with list a statement of progress on and delivery dates for materials or items of equipment fabricated or stored away from Project site.

C. Field Condition Reports: Immediately on discovery of a difference between field conditions and the Contract Documents, prepare and submit a detailed report. Submit with a request for interpretation on CSI Form 13.2A. Include a detailed description of the differing conditions, together with recommendations for changing the Contract Documents.

2.3 SPECIAL REPORTS

A. General: Submit special reports directly to Owner within one (1) day of an occurrence. Distribute copies of report to parties affected by the occurrence.

B. Reporting Unusual Events: When an event of an unusual and significant nature occurs at Project site, whether or not related directly to the Work, prepare and submit a special report. List chain of events, persons participating, response by Contractor's personnel, evaluation of results or effects, and similar pertinent information. Advise Owner in advance when these events are known or predictable.

C. Roofing Manufacturer’s Field Report: Prepare and submit the Roofing Manufacturer’s Field reports weekly describing field conditions, work completed each day, general weather conditions, decisions made in the field, stoppages, delays, and other observations made by the Roofing Manufacturer’s Field personnel.

PART 3 - EXECUTION

3.1 CONTRACTOR'S CONSTRUCTION SCHEDULE

A. Contractor's Construction Schedule Updating: At monthly intervals, update schedule to reflect actual construction progress and activities. Issue schedule one week before each regularly scheduled progress meeting.
1. Revise schedule immediately after each meeting or other activity where revisions have been recognized or made. Issue updated schedule monthly.
2. Include a report with updated schedule that indicates every change, including, but not limited to, changes in logic, durations, actual starts and finishes, and activity durations.
3. As the Work progresses, indicate Actual Completion percentage for each activity.

B. Distribution: Distribute copies of approved schedule to Architect, Construction Manager, Owner, separate contractors, testing and inspecting agencies, and other parties identified by Contractor with a need-to-know schedule responsibility.
1. Post copies in Project meeting rooms and temporary field offices.
2. When revisions are made, distribute updated schedules to the same parties and post in the same locations. Delete parties from distribution when they have completed their assigned portion of the Work and are no longer involved in performance of construction activities.

END OF SECTION 01320

SECTION 01330 - SUBMITTAL PROCEDURES October 3, 2006

PART 1 - GENERAL

1.1 RELATED DOCUMENTS

A. Drawings and general provisions of the Contract, including General and Supplementary Conditions and other Division 1 Specification Sections, apply to this Section.

1.2 SUMMARY

A. This Section includes administrative and procedural requirements for submitting Shop Drawings, Product Data, Samples, and other submittals.

B. Related Sections include the following:
1. Division 1 Section "Project Management and Coordination" for submitting and distributing meeting and conference minutes and for submitting Coordination Drawings.
2. Division 1 Section "Quality Requirements" for submitting test and inspection reports and for mockup requirements.
3. Division 1 Section "Closeout Procedures" for submitting warranties.
4. Division 1 Section "Project Record Documents" for submitting Record Drawings, Record Specifications, and Record Product Data.
5. Division 1 Section "Operation and Maintenance Data" for submitting operation and maintenance manuals.
6. Division 1 Section "Demonstration and Training" for submitting videotapes of demonstration of equipment and training of Owner's personnel.
7. Divisions 2 through 16 Sections for specific requirements for submittals in those Sections.

1.3 DEFINITIONS

A. Action Submittals: Written and graphic information that requires Architect's responsive action.

B. Informational Submittals: Written information that does not require Architect's responsive action. Submittals may be rejected for not complying with requirements.

1.4 SUBMITTAL PROCEDURES

A. Coordination: Coordinate preparation and processing of submittals with performance of construction activities.
1. Coordinate each submittal with fabrication, purchasing, testing, delivery, other submittals, and related activities that require sequential activity.
2. Coordinate transmittal of different types of submittals for related parts of the Work so processing will not be delayed because of need to review submittals concurrently for coordination.
   a. Architect reserves the right to withhold action on a submittal requiring coordination with other submittals until related submittals are received.

B. Submittals Schedule: Provide a prioritized schedule of submittals.

C. Processing Time: Allow enough time for submittal review, including time for resubmittals, as follows. Time for review shall commence on Architect's receipt of submittal. No extension of the Contract Time will be authorized because of failure to transmit submittals enough in advance of the Work to permit processing, including resubmittals.
   1. Initial Review: Allow 15 days for initial review of each submittal. Allow additional time if coordination with subsequent submittals is required. Construction Manager will advise Contractor when a submittal being processed must be delayed for coordination.
   2. Intermediate Review: If intermediate submittal is necessary, process it in same manner as initial submittal.
   3. Resubmittal Review: Allow 15 days for review of each resubmittal.
   4. Concurrent Consultant Review: Where the Contract Documents indicate that submittals may be transmitted simultaneously to Architect and to Architect's consultants, allow 15 days for review of each submittal. Submittal will be returned to Construction Manager, through Architect, before being returned to Contractor.

D. Identification: Place a permanent label or title block on each submittal for identification.
   1. Indicate name of firm or entity that prepared each submittal on label or title block.
   2. Provide a space approximately 5" x 10" on label or beside title block to record Contractor's review and approval markings and action taken by Architect.
   3. Include the following information on label for processing and recording action taken:
      a. Project name.
      b. Date.
      c. Name and address of Architect and Construction Manager.
      d. Name and address of Contractor or Subcontractor.
      e. Name and address of supplier.
      f. Name of manufacturer.
      g. Number and title of appropriate Specification Section.

E. Deviations: Highlight, encircle, or otherwise specifically identify deviations from the Contract Documents on submittals.

F. Additional Copies: Unless additional copies are required for final submittal, and unless Architect observes noncompliance with provisions in the Contract Documents, initial submittal may serve as final submittal.
   1. Submit one copy of submittal to concurrent reviewer in addition to specified number of copies to Architect.

G. Transmittal: Package each submittal appropriately for transmittal and handling. Transmit each submittal using a transmittal form. Architect will return submittals, without review, received from sources other than Construction Manager.
   1. Transmittal Form: Use regular transmittal form.
   2. On an attached separate sheet, prepared on Contractor's letterhead, record relevant information, requests for data, revisions other than those requested by Architect on previous submittals, and deviations from requirements in the Contract Documents, including minor variations and limitations. Include same label information as related submittal.

H. Resubmittals: Make resubmittals in same form and number of copies as initial submittal.
   1. Note date and content of previous submittal.
   2. Note date and content of revision in label or title block and clearly indicate extent of revision.
   3. Resubmit submittals until they are marked "Conforms@.

I. Distribution: Furnish copies of final submittals to manufacturers, subcontractors, suppliers, fabricators, installers, authorities having jurisdiction, and others as necessary for performance of construction activities. Show distribution on transmittal forms.

J. Use for Construction: Use only final submittals with mark indicating "Conforms" taken by Architect and Construction Manager.

PART 2 - PRODUCTS

2.1 ACTION SUBMITTALS

A. General: Prepare and submit Action Submittals required by individual Specification Sections.

B. Product Data: Collect information into a single submittal for each element of construction and type of product or equipment.

1. If information must be specially prepared for submittal because standard printed data are not suitable for use, submit as Shop Drawings, not as Product Data.
2. Mark each copy of each submittal to show which products and options are applicable.
3. Include the following information, as applicable:
   a. Manufacturer's written recommendations.
   b. Manufacturer's product specifications.
   c. Manufacturer's installation instructions.
   d. Standard color charts.
   e. Manufacturer's catalog cuts.
   f. Wiring diagrams showing factory-installed wiring.
   g. Printed performance curves.
   h. Operational range diagrams.
   i. Mill reports.
   j. Standard product operation and maintenance manuals.
   k. Compliance with specified referenced standards.
   l. Testing by recognized testing agency.
   m. Application of testing agency labels and seals.
   n. Notation of coordination requirements.
4. Submit Product Data before or concurrent with Samples.
5. Number of Copies: Submit four (4) copies of Product Data, unless otherwise indicated. Architect will return two (2) copies. Mark up and retain one returned copy as a Project Record Document.

C. Shop Drawings: Prepare Project-specific information, drawn accurately to scale. Do not base Shop Drawings on reproductions of the Contract Documents or standard printed data.

1. Preparation: Fully illustrate requirements in the Contract Documents. Include the following information, as applicable:
   a. Dimensions.
   b. Identification of products.
   c. Fabrication and installation drawings.
   d. Roughing-in and setting diagrams.
   e. Wiring Diagrams:
      1) Differentiate between manufacturer-installed and field-installed wiring.
      2) Show field-installed wiring, including power, signal, and control wiring.

f. Shopwork manufacturing instructions.
g. Templates and patterns.
h. Schedules.
i. Design calculations.
j. Compliance with specified standards.
k. Notation of coordination requirements.
l. Notation of dimensions established by field measurement.
m. Relationship to adjoining construction clearly indicated.
n. Seal and signature of Utah registered professional engineer if specified.
o. Wiring Diagrams: Differentiate between manufacturer-installed and field-installed wiring.

2. Sheet Size: Except for templates, patterns, and similar full-size drawings, submit Shop Drawings on sheets at least 8-1/2 by 11 inches (215 by 280 mm) but no larger than 30 by 42 inches (750 by 1000 mm).
3. Number of Copies: Submit copies of each submittal, as follows:
   a. One set of reproducible vellums and five (5) copies.
   b. Must be reviewed, approved, stamped, signed and dated by Construction Manager.
   c. Show Specification Section Number (from Project Manual).
   d. Show Contractor=s name, address, telephone and fax numbers and Contact Person.
   e. Construction Manager:
      1) Shall receive back his one set of reproducible vellum drawings and one print copy, as reviewed by the Architect and/or Engineer.
      2) Construction Manager is responsible for print sets and distribution of same.
      3) Shop Drawing originals belong to the Construction Manager and shall remain in his files.

D. Samples: Submit Samples for review of kind, color, pattern, and texture for a check of these characteristics with other elements and for a comparison of these characteristics between submittal and actual component as delivered and installed.
1. Transmit Samples that contain multiple, related components such as accessories together in one submittal package.
2. Identification: Attach label on unexposed side of Samples that includes the following:
   a. Generic description of Sample.
   b. Product name and name of manufacturer.
   c. Sample source.
   d. Number and title of appropriate Specification Section.
3. Disposition: Maintain sets of approved Samples at Project site, available for quality-control comparisons throughout the course of construction activity. Sample sets may be used to determine final acceptance of construction associated with each set.
   a. Samples that may be incorporated into the Work are indicated in individual Specification Sections. Such Samples must be in an undamaged condition at time of use.
   b. Samples not incorporated into the Work, or otherwise designated as Owner's property, are the property of Contractor.
4. Samples for Initial Selection: Submit manufacturer's color charts consisting of units or sections of units showing the full range of colors, textures, and patterns available.
   a. Number of Samples: Submit two (2) full set(s) of available choices where color, pattern, texture, or similar characteristics are required to be selected from manufacturer's product line. Architect, through Construction Manager,

will return one submittal with options selected.

5. Samples for Verification: Submit full-size units or Samples of size indicated, prepared from same material to be used for the Work, cured and finished in manner specified, and physically identical with material or product proposed for use, and that show full range of color and texture variations expected. Samples include, but are not limited to, the following: partial sections of manufactured or fabricated components; small cuts or containers of materials; complete units of repetitively used materials; swatches showing color, texture, and pattern; color range sets; and components used for independent testing and inspection.
   a. Number of Samples: Submit three (3) sets of Samples. Architect will retain one (1) Sample set; remainder will be returned.
      1) Submit a single Sample where assembly details, workmanship, fabrication techniques, connections, operation, and other similar characteristics are to be demonstrated.
      2) If variation in color, pattern, texture, or other characteristic is inherent in material or product represented by a Sample, submit at least three (3) sets of paired units that show approximate limits of variations.

E. Product Schedule or List: As required in individual Specification Sections, prepare a written summary indicating types of products required for the Work and their intended location. Include the following information in tabular form:
   1. Type of product. Include unique identifier for each product.
   2. Number and name of room or space.
   3. Location within room or space.
   4. Number of Copies: Submit five (5) copies of product schedule or list, unless otherwise indicated. Architect will return three (3) copies.
      a. Mark up and retain one returned copy as a Project Record Document.

F. Delegated-Design Submittal: Comply with requirements in Division 1 Section AQuality Requirements@.

G. Submittals Schedule: Provide a prioritized schedule of submittals.

H. Subcontract List: Prepare a written summary identifying individuals or firms proposed for each portion of the Work, including those who are to furnish products or equipment fabricated to a special design. Include the following information in tabular form:
   1. Name, address, and telephone number of entity performing subcontract or supplying products.
   2. Number and title of related Specification Section(s) covered by subcontract.
   3. Drawing number and detail references, as appropriate, covered by subcontract.

2.2 INFORMATIONAL SUBMITTALS

A. General: Prepare and submit Informational Submittals required by other Specification Sections.
   1. Number of Copies: Submit two (2) copies of each submittal, unless otherwise indicated. Architect will not return copies.
   2. Certificates and Certifications: Provide a notarized statement that includes signature of entity responsible for preparing certification. Certificates and certifications shall be signed by an officer or other individual authorized to sign documents on behalf of that entity.
   3. Test and Inspection Reports: Comply with requirements specified in Division 1

Section "Quality Requirements."

B. Coordination Drawings: Comply with requirements specified in Division 1 Section "Project Management and Coordination."

C. Contractor's Construction Schedule: Comply with requirements specified in Division 1 Section "Project Management and Coordination."

D. Qualification Data: Prepare written information that demonstrates capabilities and experience of firm or person. Include lists of completed projects with project names and addresses, names and addresses of architects and owners, and other information specified.

E. Welding Certificates: Prepare written certification that welding procedures and personnel comply with requirements in the Contract Documents. Submit record of Welding Procedure Specification (WPS) and Procedure Qualification Record (PQR) on AWS forms. Include names of firms and personnel certified.

F. Installer Certificates: Prepare written statements on manufacturer's letterhead certifying that Installer complies with requirements in the Contract Documents and, where required, is authorized by manufacturer for this specific Project.

G. Manufacturer Certificates: Prepare written statements on manufacturer's letterhead certifying that manufacturer complies with requirements in the Contract Documents. Include evidence of manufacturing experience where required.

H. Product Certificates: Prepare written statements on manufacturer's letterhead certifying that product complies with requirements in the Contract Documents.

I. Material Certificates: Prepare written statements on manufacturer's letterhead certifying that material complies with requirements in the Contract Documents.

J. Material Test Reports: Prepare reports written by a qualified testing agency, on testing agency's standard form, indicating and interpreting test results of material for compliance with requirements in the Contract Documents.

K. Product Test Reports: Prepare written reports indicating current product produced by manufacturer complies with requirements in the Contract Documents. Base reports on evaluation of tests performed by manufacturer and witnessed by a qualified testing agency, or on comprehensive tests performed by a qualified testing agency.

L. Research/Evaluation Reports: Prepare written evidence, from a model code organization acceptable to authorities having jurisdiction, that product complies with building code in effect for Project. Include the following information:
   1. Name of evaluation organization.
   2. Date of evaluation.
   3. Time period when report is in effect.
   4. Product and manufacturers' names.
   5. Description of product.
   6. Test procedures and results.
   7. Limitations of use.

M. Schedule of Tests and Inspections: Comply with requirements specified in Division 1 Section "Quality Requirements."

N. Preconstruction Test Reports: Prepare reports written by a qualified testing agency, on testing agency's standard form, indicating and interpreting results of tests performed before installation of product, for compliance with performance requirements in the Contract Documents.

O. Compatibility Test Reports: Prepare reports written by a qualified testing agency, on testing agency's standard form, indicating and interpreting results of compatibility tests performed before installation of product. Include written recommendations for primers and substrate preparation needed for adhesion.

P. Field Test Reports: Prepare reports written by a qualified testing agency, on testing agency's standard form, indicating and interpreting results of field tests performed either during installation of product or after product is installed in its final location, for compliance with requirements in the Contract Documents.

Q. Maintenance Data: Prepare written and graphic instructions and procedures for operation and normal maintenance of products and equipment. Comply with requirements specified in Division 1 Section "Operation and Maintenance Data."

R. Design Data: Prepare written and graphic information, including, but not limited to, performance and design criteria, list of applicable codes and regulations, and calculations. Include list of assumptions and other performance and design criteria and a summary of loads. Include load diagrams if applicable. Provide name and version of software, if any, used for calculations. Include page numbers.

S. Manufacturer's Instructions: Prepare written or published information that documents manufacturer's recommendations, guidelines, and procedures for installing or operating a product or equipment. Include name of product and name, address, and telephone number of manufacturer. Include the following, as applicable:
1. Preparation of substrates.
2. Required substrate tolerances.
3. Sequence of installation or erection.
4. Required installation tolerances.
5. Required adjustments.
6. Recommendations for cleaning and protection.

T. Manufacturer's Field Reports: Prepare written information documenting factory-authorized service representative's tests and inspections. Include the following, as applicable:
1. Name, address, and telephone number of factory-authorized service representative making report.
2. Statement on condition of substrates and their acceptability for installation of product.
3. Statement that products at Project site comply with requirements.
4. Summary of installation procedures being followed, whether they comply with requirements and, if not, what corrective action was taken.
5. Results of operational and other tests and a statement of whether observed performance complies with requirements.
6. Statement whether conditions, products, and installation will affect warranty.
7. Other required items indicated in individual Specification Sections.

U. Insurance Certificates and Bonds: Prepare written information indicating current status of insurance or bonding coverage. Include name of entity covered by insurance or bond, limits of coverage, amounts of deductibles, if any, and term of the coverage.

V. Material Safety Data Sheets (MSDSs): Submit information directly to Owner; do not submit to Architect.
   1. Architect will not review submittals that include MSDSs and will return them with no action taken.

2.3 DELEGATED DESIGN

A. Performance and Design Criteria: Where professional design services or certifications by a design professional are specifically required of Contractor by the Contract Documents, provide products and systems complying with specific performance and design criteria indicated.
   1. If criteria indicated are not sufficient to perform services or certification required, submit a written request for additional information to Architect.

B. Delegated-Design Submittal: In addition to Shop Drawings, Product Data, and other required submittals, submit three (3) copies of a statement, signed and sealed by the responsible design professional, for each product and system specifically assigned to Contractor to be designed or certified by a design professional.
   1. Indicate that products and systems comply with performance and design criteria in the Contract Documents. Include list of codes, loads, and other factors used in performing these services.

PART 3 - EXECUTION

3.1 CONSTRUCTION MANAGER'S REVIEW

A. Review each submittal and check for coordination with other Work of the Contract and for compliance with the Contract Documents. Note corrections and field dimensions. Mark with review stamp before submitting to Architect.

B. Review Stamp: Stamp each submittal with a uniform, review stamp. Include Project name and location, submittal number, Specification Section title and number, name of reviewer, date of Contractor's review, and statement certifying that submittal has been reviewed, checked, and reviewed for compliance with the Contract Documents.

3.2 ARCHITECT'S ACTION

A. General: Architect will not review submittals that do not bear Construction Manager's review stamp and will return them without action.

B. Action Submittals: Architect will review each submittal, make marks to indicate corrections or modifications required, and return it. Architect will stamp each submittal with an action stamp and will mark stamp appropriately to indicate action taken, as follows:
   1. Final Unrestricted Release: When the Architect marks a submittal AConforms@ the work covered by the submittal may proceed provided it complies with requirements of the Contract Documents. Final payment depends on that compliance.
   2. Final-But-Restricted Release: When the Architect marks a submittal ARe: Notes@, the work covered by the submittal may proceed provided it complies with the notations or corrections on the submittal and requirements of the Contract Documents. Final payment depends on that compliance.
   3. Returned For Resubmittal: When the Architect marks a submittal ARevise and

Resubmit@, do not proceed with work covered by the submittal, including purchasing, fabrication, delivery, or other activity. Revise or prepare a new submittal according to the notations; resubmit without delay. Repeat if necessary to obtain different action mark.

a. Do not use, or allow others to use, submittals marked ARevise and Resubmit@, at the Project Site or elsewhere where work is in progress.

4. Returned For Alternate Submittal: When Architect marks a submittal ADoes Not Conform@, do not proceed with work covered by the submittal, including purchasing, fabrication, delivery, or other activity. Product was not appropriate or as specified. Prepare a new submittal according to the Contract Documents.

C. Informational Submittals: Architect will review each submittal and will not return it, or will return it if it does not comply with requirements. Architect will forward each submittal to appropriate party.

D. Partial submittals are not acceptable, will be considered nonresponsive, and will be returned without review.

E. Submittals not required by the Contract Documents may not be reviewed and may be discarded.

END OF SECTION 01330

SECTION 01500 - TEMPORARY FACILITIES AND CONTROLS October 3, 2006

PART 1 - GENERAL

1.1 RELATED DOCUMENTS

A. Drawings and general provisions of the Contract, including General and Supplementary Conditions and other Division 1 Specification Sections, apply to this Section.

1.2 SUMMARY

A. This Section includes requirements for temporary facilities and controls, including temporary utilities, support facilities, and security and protection facilities.

B. Temporary utilities include, but are not limited to, the following:
1. Sanitary facilities, including toilets, wash facilities, and drinking-water facilities.
2. Electric power service.
3. Telephone service.

C. Support facilities include, but are not limited to, the following:
1. Waste disposal facilities.
2. Storage and fabrication sheds.
3. Lifts and hoists.
4. Construction aids and miscellaneous services and facilities.
5. First aid station.

D. Security and protection facilities include, but are not limited to, the following:
1. Environmental protection.
2. Tree and plant protection.
3. Site enclosure fence.
4. Security enclosure and lockup.
5. Barricades, warning signs, and lights.
6. Covered walkways.
7. Fire protection.

E. Related Sections include the following:
1. Division 1 Section "Submittal Procedures" for procedures for submitting copies of implementation and termination schedule and utility reports.
2. Division 1 Section "Execution Requirements" for progress cleaning requirements.
3. Divisions 2 through 16 for temporary heat, ventilation, and humidity requirements for products in those Sections.

1.1 USE CHARGES

A. General: Cost or use charges for temporary facilities are not chargeable to Owner or Architect and shall be included in the Contract Sum. Allow other entities to use temporary services and facilities without cost, including, but not limited to, the following:
1. Owner's construction forces.
2. Occupants of Project.
3. Architect.
4. Testing agencies.
5. Personnel of authorities having jurisdiction.

B. Electric Power Service: Pay electric power service use charges, whether metered or otherwise, for electricity used by all entities engaged in construction activities at Project site.

1.2 QUALITY ASSURANCE

A. Standards: Comply with ANSI A10.6, NECA's "Temporary Electrical Facilities," and NFPA 241.
   1. Trade Jurisdictions: Assigned responsibilities for installation and operation of temporary utilities are not intended to interfere with trade regulations and union jurisdictions.
   2. Electric Service: Comply with NECA, NEMA, and UL standards and regulations for temporary electric service. Install service to comply with NFPA 70.

B. Tests and Inspections: Arrange for authorities having jurisdiction to test and inspect each temporary utility before use. Obtain required certifications and permits.

1.3 PROJECT CONDITIONS

A. Temporary Utilities: At earliest feasible time, when acceptable to Owner, change over from use of temporary service to use of permanent service.
   1. Temporary Use of Permanent Facilities: Installer of each permanent service shall assume responsibility for operation, maintenance, and protection of each permanent service during its use as a construction facility before Owner's acceptance, regardless of previously assigned responsibilities.

B. Conditions of Use: The following conditions apply to use of temporary services and facilities by all parties engaged in the Work:
   1. Keep temporary services and facilities clean and neat.
   2. Relocate temporary services and facilities as required by progress of the Work.

PART 2 - PRODUCTS

2.1 MATERIALS

A. General: Provide new materials. Undamaged, previously used materials in serviceable condition may be used if approved by Architect. Provide materials suitable for use intended.

B. Chain-Link Fencing: Minimum 2-inch (50-mm), 0.148-inch- (3.76-mm-) thick, galvanized steel, chain-link fabric fencing; minimum 6 feet (1.8 m) high with galvanized steel pipe posts; minimum 2-3/8-inch- (60-mm-) OD line posts and 2-7/8-inch- (73-mm-) OD corner and pull posts, with 1-5/8-inch- (42-mm-) OD top rails.

C. Lumber and Plywood: Comply with requirements in Division 6 Section "Miscellaneous Carpentry."

D. Tarpaulins: Fire-resistive labeled with flame-spread rating of 15 or less.

E. Water: Potable.

2.2 EQUIPMENT

A. General: Provide equipment suitable for use intended.

B. Fire Extinguishers: Hand carried, portable, UL rated. Provide class and extinguishing agent as indicated or a combination of extinguishers of NFPA-recommended classes for exposures.
   1. Comply with NFPA 10 and NFPA 241 for classification, extinguishing agent, and size required by location and class of fire exposure.

C. Self-Contained Toilet Units: Single-occupant units of chemical, aerated recirculation, or combustion type; vented; fully enclosed with a glass-fiber-reinforced polyester shell or similar nonabsorbent material.

D. Drinking-Water Fixtures: Containerized, tap-dispenser, bottled-water drinking-water units, including paper cup supply.
   1. Where power is accessible, provide electric water coolers to maintain dispensed water temperature at 45 to 55 deg F (7.2 to 12.7 deg C).

E. Electrical Outlets: Properly configured, NEMA-polarized outlets to prevent insertion of 110- to 120-V plugs into higher-voltage outlets; equipped with ground-fault circuit interrupters, reset button, and pilot light.

F. Power Distribution System Circuits: Where permitted and overhead and exposed for surveillance, wiring circuits, not exceeding 125-V ac, 20-A rating, and lighting circuits may be nonmetallic sheathed cable.

PART 3 - EXECUTION

3.1 INSTALLATION, GENERAL

A. Locate facilities where they will serve Project adequately and result in minimum interference with performance of the Work. Relocate and modify facilities as required.

B. Provide each facility ready for use when needed to avoid delay. Maintain and modify as required. Do not remove until facilities are no longer needed or are replaced by authorized use of completed permanent facilities.

3.2 TEMPORARY UTILITY INSTALLATION

A. General: Engage appropriate local utility company to install temporary service or connect to existing service. Where utility company provides only part of the service, provide the remainder with matching, compatible materials and equipment. Comply with utility company recommendations.
   1. Arrange with utility company, Owner, and existing users for time when service can be interrupted, if necessary, to make connections for temporary services.
   2. Provide adequate capacity at each stage of construction. Before temporary utility is available, provide trucked-in services.
   3. Obtain easements to bring temporary utilities to Project site where Owner's easements cannot be used for that purpose.

B. Sanitary Facilities: Provide temporary toilets, wash facilities, and drinking-water fixtures. Comply with regulations and health codes for type, number, location, operation, and

maintenance of fixtures and facilities.

1. Disposable Supplies: Provide toilet tissue, paper towels, paper cups, and similar disposable materials for each facility. Maintain adequate supply. Provide covered waste containers for disposal of used material.
2. Toilets: Install self-contained toilet units. Shield toilets to ensure privacy. Provide separate facilities for male and female personnel.
3. Drinking-Water Facilities: Provide bottled-water, drinking-water units.
   a. Where power is accessible, provide electric water coolers to maintain dispensed water temperature at 45 to 55 deg F (7.2 to 12.7 deg C).

C. Electric Power Service: Provide weatherproof, grounded electric power service and distribution system of sufficient size, capacity, and power characteristics during construction period. Include meters, transformers, overload-protected disconnecting means, automatic ground-fault interrupters, and main distribution switchgear.

1. Install power distribution wiring overhead and rise vertically where least exposed to damage.
2. Connect temporary service to Owner's existing power source, as directed by electric company officials.

D. Electric Distribution: Provide receptacle outlets adequate for connection of power tools and equipment.

1. Provide waterproof connectors to connect separate lengths of electrical power cords if single lengths will not reach areas where construction activities are in progress. Do not exceed safe length-voltage ratio.
2. Provide warning signs at power outlets other than 110 to 120 V.
3. Provide metal conduit, tubing, or metallic cable for wiring exposed to possible damage. Provide rigid steel conduits for wiring exposed on grades, floors, decks, or other traffic areas.
4. Provide metal conduit enclosures or boxes for wiring devices.
5. Provide 4-gang outlets, spaced so 100-foot (30-m) extension cord can reach each area for power hand tools and task lighting. Provide a separate 125-V ac, 20-A circuit for each outlet.

E. Telephone Service: Provide temporary telephone service throughout construction period for common-use facilities used by all personnel engaged in construction activities. Install separate telephone line for each field office and first-aid station.

1. Provide additional telephone lines for the following:
   a. In field office with more than two occupants, install a telephone for each additional occupant or pair of occupants.
   b. Provide a dedicated telephone line for each facsimile machine and computer with modem in each field office.
   c. Provide a separate telephone line for Owner's use.
2. At each telephone, post a list of important telephone numbers.
   a. Police and fire departments.
   b. Ambulance service.
   c. Contractor's home office.
   d. Architect's office.
   e. Engineers' offices.
   f. Owner's office.
   g. Principal subcontractors' field and home offices.
3. Provide an answering machine or voice-mail service on superintendent's telephone.
4. Provide a portable cellular telephone for superintendent's use in making and receiving telephone calls when away from field office.

3.3 SUPPORT FACILITIES INSTALLATION

A. General: Comply with the following:
   1. Locate field offices, storage sheds, sanitary facilities, and other temporary construction and support facilities for easy access.
   2. Provide incombustible construction for offices, shops, and sheds located within construction area or within 30 feet (9 m) of building lines. Comply with NFPA 241.
   3. Maintain support facilities until near Substantial Completion. Remove before Substantial Completion. Personnel remaining after Substantial Completion will be permitted to use permanent facilities, under conditions acceptable to Owner.

B. Waste Disposal Facilities:
   1. Establish a system for daily collection and disposal of waste or extraneous materials from all construction areas on site that may present a hazard to the project, its craftsmen and the expeditious construction of the work. The Contractor shall provide to the Owner a satisfactory method to assure clean-up is performed in a timely and expeditious fashion. Enforce requirements strictly. Do not hold collected materials at the site longer than 7 days during normal weather or 3 days when the daily temperature is expected to rise above 80 degrees F. Handle waste materials that are hazardous, dangerous, or unsanitary separately from other inert waste by containerizing appropriately. Dispose of waste material in a lawful manner.
      a. Burying or burning of waste materials on the site will not be permitted.
      b. Washing waste materials down sewers or into waterways will not be permitted.
      c. Provide rodent proof containers located on each floor level of construction work, to encourage depositing of lunch garbage and similar wastes by construction personnel.
   2. The Owner reserves the right to withhold payments and perform the clean-up, if necessary, at the expense of the Contractor, if unsatisfactory clean-up efforts are not performed in a timely fashion.

C. Storage and Fabrication Sheds: Provide sheds sized, furnished, and equipped to accommodate materials and equipment involved, including temporary utility services. Sheds may be open shelters or fully enclosed spaces within building or elsewhere on-site.

D. Lifts and Hoists: Provide facilities for hoisting materials and personnel. Truck cranes and similar devices used for hoisting materials are considered "tools and equipment" and not temporary facilities.

3.4 SECURITY AND PROTECTION FACILITIES INSTALLATION

A. Environmental Protection: Provide protection, operate temporary facilities, and conduct construction in ways and by methods that comply with environmental regulations and that minimize possible air, waterway, and subsoil contamination or pollution or other undesirable effects. Avoid using tools and equipment that produce harmful noise. Restrict use of noisemaking tools and equipment to hours that will minimize complaints from persons or firms near Project site.

B. Tree and Plant Protection: Install temporary fencing located as indicated or outside the drip line of trees to protect vegetation from construction damage. Protect tree root systems from damage, flooding, and erosion.

C. Site Enclosure Fence: Before construction operations begin, install chain-link enclosure fence with lockable entrance gates. Locate where indicated, or enclose entire Project site or portion determined sufficient to accommodate construction operations. Install in a manner that will prevent people, dogs, and other animals from easily entering site except by entrance gates.
   1. Set fence posts in concrete bases.
   2. Provide gates in sizes and at locations necessary to accommodate delivery vehicles and other construction operations.
   3. Maintain security by limiting number of keys and restricting distribution to authorized personnel.

D. Security Enclosure and Lockup: Install substantial temporary enclosure around partially completed areas of construction. Provide lockable entrances to prevent unauthorized entrance, vandalism, theft, and similar violations of security.

E. Barricades, Warning Signs, and Lights: Comply with standards and code requirements for erecting structurally adequate barricades. Paint with appropriate colors, graphics, and warning signs to inform personnel and public of possible hazard. Where appropriate and needed, provide lighting, including flashing red or amber lights.
   1. For safety barriers, sidewalk bridges, and similar uses, provide minimum 5/8-inch-(16-mm-) thick exterior plywood.

F. Covered Walkway: Where required, erect a structurally adequate, protective, covered walkway for passage of persons along adjacent public street. Coordinate with entrance gates, other facilities, and obstructions. Comply with regulations of authorities having jurisdiction.

G. Temporary Fire Protection: Until fire-protection needs are supplied by permanent facilities, install and maintain temporary fire-protection facilities of types needed to protect against reasonably predictable and controllable fire losses. Comply with NFPA 241.
   1. Provide fire extinguishers, installed on walls on mounting brackets, visible and accessible from space being served, with sign mounted above.
      a. Field Offices: Class A stored-pressure water-type extinguishers.
      b. Other Locations: Class ABC dry-chemical extinguishers or a combination of extinguishers of NFPA-recommended classes for exposures.
      c. Locate fire extinguishers where convenient and effective for their intended purpose; provide not less than one extinguisher on each floor at or near each usable stairwell.
   2. Store combustible materials in containers in fire-safe locations.
   3. Maintain unobstructed access to fire extinguishers, fire hydrants, temporary fire-protection facilities, stairways, and other access routes for firefighting. Prohibit smoking in hazardous fire-exposure areas.
   4. Supervise welding operations, combustion-type temporary heating units, and similar sources of fire ignition.
   5. Develop and supervise an overall fire-prevention and first-aid fire-protection program for personnel at Project site. Review needs with local fire department and establish procedures to be followed. Instruct personnel in methods and procedures. Post warnings and information.
   6. Provide temporary standpipes and hoses for fire protection. Hang hoses with a warning sign stating that hoses are for fire-protection purposes only and are not to be removed. Match hose size with outlet size and equip with suitable nozzles.

3.5 OPERATION, TERMINATION, AND REMOVAL

A. Supervision: Enforce strict discipline in use of temporary facilities. To minimize waste and abuse, limit availability of temporary facilities to essential and intended uses.

B. Maintenance: Maintain facilities in good operating condition until removal. Protect from damage caused by freezing temperatures and similar elements.
   1. Maintain operation of temporary enclosures, heating, cooling, humidity control, ventilation, and similar facilities on a 24-hour basis where required to achieve indicated results and to avoid possibility of damage.
   2. Prevent water-filled piping from freezing. Maintain markers for underground lines. Protect from damage during excavation operations.

C. Temporary Facility Changeover: Except for using permanent fire protection as soon as available, do not change over from using temporary security and protection facilities to permanent facilities until Substantial Completion.

D. Termination and Removal: Remove each temporary facility when need for its service has ended, when it has been replaced by authorized use of a permanent facility, or no later than Substantial Completion. Complete or, if necessary, restore permanent construction that may have been delayed because of interference with temporary facility. Repair damaged Work, clean exposed surfaces, and replace construction that cannot be satisfactorily repaired.
   1. Materials and facilities that constitute temporary facilities are the property of Contractor.
   2. Remove materials contaminated with road oil, asphalt and other petrochemical compounds, and other substances that might impair growth of plant materials or lawns. Repair or replace street paving, curbs, and sidewalks at temporary entrances, as required by authorities having jurisdiction.
   3. At Substantial Completion, clean and renovate permanent facilities used during construction period. Comply with final cleaning requirements in Division 1 Section "Closeout Procedures."

END OF SECTION 01500

SECTION 01600 - PRODUCT REQUIREMENTS October 3, 2006

PART 1 - GENERAL

1.1 RELATED DOCUMENTS

A. Drawings and general provisions of the Contract, including General and Supplementary Conditions and other Division 1 Specification Sections, apply to this Section.

1.2 SUMMARY

A. This Section includes the following administrative and procedural requirements: selection of products for use in Project; product delivery, storage, and handling; manufacturers' standard warranties on products; special warranties; product substitutions; and comparable products.

B. Related Sections include the following:
1. Division 1 Section "Definitions and Standards" for applicable industry standards for products specified.
2. Division 1 Section "Closeout Procedures" for submitting warranties for contract closeout.
3. Divisions 2 through 16 Sections for specific requirements for warranties on products and installations specified to be warranted.

1.3 DEFINITIONS

A. Products: Items purchased for incorporating into the Work, whether purchased for Project or taken from previously purchased stock. The term "product" includes the terms "material," "equipment," "system," and terms of similar intent.
1. Named Products: Items identified by manufacturer's product name, including make or model number or other designation, shown or listed in manufacturer's published product literature, that is current as of date of the Contract Documents.
2. New Products: Items that have not previously been incorporated into another project or facility. Products salvaged or recycled from other projects are not considered new products.
3. Comparable Product: Product that is demonstrated and approved through submittal process, or where indicated as a product substitution, to have the indicated qualities related to type, function, dimension, in-service performance, physical properties, appearance, and other characteristics that equal or exceed those of specified product.

B. Substitutions: Changes in products, materials, equipment, and methods of construction from those required by the Contract Documents and proposed by Contractor.

C. Basis-of-Design Product Specification: Where a specific manufacturer's product is named and accompanied by the words "basis of design," including make or model number or other designation, to establish the significant qualities related to type, function, dimension, in-service performance, physical properties, appearance, and other characteristics for purposes of evaluating comparable products of other named manufacturers.

D. Manufacturer's Warranty: Preprinted written warranty published by individual manufacturer for a particular product and specifically endorsed by manufacturer to Owner.

E. Special Warranty: Written warranty required by or incorporated into the Contract Documents, either to extend time limit provided by manufacturer's warranty or to provide more rights for Owner.

1.4 SUBMITTALS

A. Product List: Submit a list, in tabular from, showing specified products. Include generic names of products required. Include manufacturer's name and proprietary product names for each product.
   1. Coordinate product list with Contractor's Construction Schedule and the Submittals Schedule.
   2. Form: Tabulate information for each product under the following column headings:
      a. Specification Section number and title.
      b. Generic name used in the Contract Documents.
      c. Proprietary name, model number, and similar designations.
      d. Manufacturer's name and address.
      e. Supplier's name and address.
      f. Installer's name and address.
      g. Projected delivery date or time span of delivery period.
      h. Identification of items that require early submittal approval for scheduled delivery date.
   3. Initial Submittal: Within 30 days after date of commencement of the Work, submit 3 copies of initial product list. Include a written explanation for omissions of data and for variations from Contract requirements.
      a. At Contractor's option, initial submittal may be limited to product selections and designations that must be established early in Contract period.
   4. Completed List: Within 60 days after date of commencement of the Work, submit 3 copies of completed product list. Include a written explanation for omissions of data and for variations from Contract requirements.
   5. Architect's Action: Architect will respond in writing to Contractor within 15 days of receipt of completed product list. Architect's response will include a list of unacceptable product selections and a brief explanation of reasons for this action. Architect's response, or lack of response, does not constitute a waiver of requirement that products comply with the Contract Documents.

B. Substitution Requests: Submit three copies of each request for consideration. Identify product or fabrication or installation method to be replaced. Include Specification Section number and title and Drawing numbers and titles.
   1. Substitution Request Form: Use CSI Form 13.1A.
   2. Documentation: Show compliance with requirements for substitutions and the following, as applicable:
      a. Statement indicating why specified material or product cannot be provided.
      b. Coordination information, including a list of changes or modifications needed to other parts of the Work and to construction performed by Owner and separate contractors, that will be necessary to accommodate proposed substitution.
      c. Detailed comparison of significant qualities of proposed substitution with those of the Work specified. Significant qualities may include attributes such as performance, weight, size, durability, visual effect, and specific features and requirements indicated.
      d. Product Data, including drawings and descriptions of products and fabrication and installation procedures.
      e. Samples, where applicable or requested.

f. List of similar installations for completed projects with project names and addresses and names and addresses of architects and owners.

g. Material test reports from a qualified testing agency indicating and interpreting test results for compliance with requirements indicated.

h. Research/evaluation reports evidencing compliance with building code in effect for Project, from a model code organization acceptable to authorities having jurisdiction.

i. Detailed comparison of Contractor's Construction Schedule using proposed substitution with products specified for the Work, including effect on the overall Contract Time. If specified product or method of construction cannot be provided within the Contract Time, include letter from manufacturer, on manufacturer's letterhead, stating lack of availability or delays in delivery.

j. Cost information, including a proposal of change, if any, in the Contract Sum.

k. Contractor's certification that proposed substitution complies with requirements in the Contract Documents and is appropriate for applications indicated.

l. Contractor's waiver of rights to additional payment or time that may subsequently become necessary because of failure of proposed substitution to produce indicated results.

3. Architect's Action: If necessary, Architect will request additional information or documentation for evaluation within one week of receipt of a request for substitution. Architect will notify Contractor of acceptance or rejection of proposed substitution within 15 days of receipt of request, or 7 days of receipt of additional information or documentation, whichever is later.

a. Form of Acceptance: Change Order.

b. Use product specified if Architect cannot make a decision on use of a proposed substitution within time allocated.

C. Basis-of-Design Product Specification Submittal: Comply with requirements in Division 1 Section "Submittal Procedures." Show compliance with requirements.

1.5 QUALITY ASSURANCE

A. Compatibility of Options: If Contractor is given option of selecting between two or more products for use on Project, product selected shall be compatible with products previously selected, even if previously selected products were also options.

1. Each contractor is responsible for providing products and construction methods compatible with products and construction methods of other contractors.

2. If a dispute arises between contractors over concurrently selectable but incompatible products, Architect will determine which products shall be used.

1.6 PRODUCT DELIVERY, STORAGE, AND HANDLING

A. Deliver, store, and handle products using means and methods that will prevent damage, deterioration, and loss, including theft. Comply with manufacturer's written instructions.

1. Schedule delivery to minimize long-term storage at Project site and to prevent overcrowding of construction spaces.

2. Coordinate delivery with installation time to ensure minimum holding time for items that are flammable, hazardous, easily damaged, or sensitive to deterioration, theft, and other losses.

3. Deliver products to Project site in an undamaged condition in manufacturer's original sealed container or other packaging system, complete with labels and instructions for

handling, storing, unpacking, protecting, and installing.

4. Inspect products on delivery to ensure compliance with the Contract Documents and to ensure that products are undamaged and properly protected.
5. Store products to allow for inspection and measurement of quantity or counting of units.
6. Store materials in a manner that will not endanger Project structure.
7. Store products that are subject to damage by the elements, under cover in a weathertight enclosure above ground, with ventilation adequate to prevent condensation.
8. Comply with product manufacturer's written instructions for temperature, humidity, ventilation, and weather-protection requirements for storage.
9. Protect stored products from damage.

1.7 PRODUCT WARRANTIES

A. Warranties specified in other Sections shall be in addition to, and run concurrent with, other warranties required by the Contract Documents. Manufacturer's disclaimers and limitations on product warranties do not relieve Contractor of obligations under requirements of the Contract Documents.

B. Special Warranties: Prepare a written document that contains appropriate terms and identification, ready for execution. Submit a draft for approval before final execution.

1. Manufacturer's Standard Form: Modified to include Project-specific information and properly executed.
2. Refer to Divisions 2 through 16 Sections for specific content requirements and particular requirements for submitting special warranties.

C. Submittal Time: Comply with requirements in Division 1 Section "Closeout Procedures."

PART 2 - PRODUCTS

2.1 PRODUCT OPTIONS

A. General Product Requirements: Provide products that comply with the Contract Documents, that are undamaged, and unless otherwise indicated, that are new at time of installation.

1. Provide products complete with accessories, trim, finish, fasteners, and other items needed for a complete installation and indicated use and effect.
2. Standard Products: If available, and unless custom products or nonstandard options are specified, provide standard products of types that have been produced and used successfully in similar situations on other projects.
3. Owner reserves the right to limit selection to products with warranties not in conflict with requirements of the Contract Documents.
4. Where products are accompanied by the term "as selected," Architect will make selection.
5. Where products are accompanied by the term "match sample," sample to be matched is Architect's.
6. Descriptive, performance, and reference standard requirements in the Specifications establish "salient characteristics" of products.
7. Or Equal: Where products are specified by name and accompanied by the term "or equal" or "or approved equal" or "or approved," comply with provisions in "Comparable Products" Article to obtain approval for use of an unnamed product.

B. Product Selection Procedures: Procedures for product selection include the following:

1. Product: Where Specification paragraphs or subparagraphs titled "Product" name a single product and manufacturer, provide the product named.
   a. Substitutions may be considered, unless otherwise indicated.
2. Manufacturer/Source: Where Specification paragraphs or subparagraphs titled "Manufacturer" or "Source" name single manufacturers or sources, provide a product by the manufacturer or from the source named that complies with requirements.
   a. Substitutions may be considered, unless otherwise indicated.
3. Products: Where Specification paragraphs or subparagraphs titled "Products" introduce a list of names of both products and manufacturers, provide one of the products listed that complies with requirements.
   a. Substitutions may be considered, unless otherwise indicated.
4. Manufacturers: Where Specification paragraphs or subparagraphs titled "Manufacturers" introduce a list of manufacturers' names, provide a product by one of the manufacturers listed that complies with requirements.
   a. Substitutions may be considered, unless otherwise indicated.
5. Available Products: Where Specification paragraphs or subparagraphs titled "Available Products" introduce a list of names of both products and manufacturers, provide one of the products listed or another product that complies with requirements. Comply with provisions in "Comparable Products" Article to obtain approval for use of an unnamed product.
6. Available Manufacturers: Where Specification paragraphs or subparagraphs titled "Available Manufacturers" introduce a list of manufacturers' names, provide a product by one of the manufacturers listed or another manufacturer that complies with requirements. Comply with provisions in "Comparable Products" Article to obtain approval for use of an unnamed product.
7. Product Options: Where Specification paragraphs titled "Product Options" indicate that size, profiles, and dimensional requirements on Drawings are based on a specific product or system, provide either the specific product or system indicated or a comparable product or system by another manufacturer. Comply with provisions in "Product Substitutions" Article.
8. Basis-of-Design Products: Where Specification paragraphs or subparagraphs titled "Basis-of-Design Products" are included and also introduce or refer to a list of manufacturers' names, provide either the specified product or a comparable product by one of the other named manufacturers. Drawings and Specifications indicate sizes, profiles, dimensions, and other characteristics that are based on the product named. Comply with provisions in "Comparable Products" Article to obtain approval for use of an unnamed product.
   a. Substitutions may be considered, unless otherwise indicated.
9. Visual Matching Specification: Where Specifications require matching an established Sample, select a product (and manufacturer) that complies with requirements and matches Architect's sample. Architect's decision will be final on whether a proposed product matches satisfactorily.
   a. If no product available within specified category matches satisfactorily and complies with other specified requirements, comply with provisions of the Contract Documents on "substitutions" for selection of a matching product.
10. Visual Selection Specification: Where Specifications include the phrase "as selected from manufacturer's colors, patterns, textures" or a similar phrase, select a product (and manufacturer) that complies with other specified requirements.
    a. Standard Range: Where Specifications include the phrase "standard range of colors, patterns, textures" or similar phrase, Architect will select color, pattern, or texture from manufacturer's product line that does not include

premium items.

b. Full Range: Where Specifications include the phrase "full range of colors, patterns, textures" or similar phrase, Architect will select color, pattern, or texture from manufacturer's product line that includes both standard and premium items.

2.2 PRODUCT SUBSTITUTIONS

A. Timing: Architect will consider requests for substitution if received within 60 days after the Notice to Proceed. Requests received after that time may be considered or rejected at discretion of Architect.

B. Conditions: Architect will consider Contractor's request for substitution when the following conditions are satisfied. If the following conditions are not satisfied, Architect will return requests without action, except to record noncompliance with these requirements:

1. Requested substitution offers Owner a substantial advantage in cost, time, energy conservation, or other considerations, after deducting additional responsibilities Owner must assume. Owner's additional responsibilities may include compensation to Architect for redesign and evaluation services, increased cost of other construction by Owner, and similar considerations.
2. Requested substitution does not require extensive revisions to the Contract Documents.
3. Requested substitution is consistent with the Contract Documents and will produce indicated results.
4. Substitution request is fully documented and properly submitted.
5. Requested substitution will not adversely affect Contractor's Construction Schedule.
6. Requested substitution has received necessary approvals of authorities having jurisdiction.
7. Requested substitution is compatible with other portions of the Work.
8. Requested substitution has been coordinated with other portions of the Work.
9. Requested substitution provides specified warranty.
10. If requested substitution involves more than one contractor, requested substitution has been coordinated with other portions of the Work, is uniform and consistent, is compatible with other products, and is acceptable to all contractors involved.

2.3 COMPARABLE PRODUCTS

A. Where products or manufacturers are specified by name, submit the following, in addition to other required submittals, to obtain approval of an unnamed product:

1. Evidence that the proposed product does not require extensive revisions to the Contract Documents, that it is consistent with the Contract Documents and will produce the indicated results, and that it is compatible with other portions of the Work.
2. Detailed comparison of significant qualities of proposed product with those named in the Specifications. Significant qualities include attributes such as performance, weight, size, durability, visual effect, and specific features and requirements indicated.
3. Evidence that proposed product provides specified warranty.
4. List of similar installations for completed projects with project names and addresses and names and addresses of architects and owners, if requested.
5. Samples, if requested.

PART 3 - EXECUTION

(Not Used)

END OF SECTION 01600

SECTION 01700 - EXECUTION REQUIREMENTS October 3, 2006

PART 1 - GENERAL

1.1 RELATED DOCUMENTS

A. Drawings and general provisions of the Contract, including General and Supplementary Conditions and other Division 1 Specification Sections, apply to this Section.

1.2 SUMMARY

A. This Section includes general procedural requirements governing execution of the Work including, but not limited to, the following:
   1. General installation of products.
   2. Progress cleaning.
   3. Starting and adjusting.
   4. Protection of installed construction.
   5. Correction of the Work.

B. Related Sections include the following:
   1. Division 1 Section "Project Management and Coordination" for procedures for coordinating field engineering with other construction activities.
   2. Division 1 Section "Submittal Procedures" for submitting surveys.
   3. Division 1 Section "Closeout Procedures" for submitting final property survey with Project Record Documents, recording of Owner-accepted deviations from indicated lines and levels, and final cleaning.

1.3 SUBMITTALS

A. Landfill Receipts: Submit copy of receipts issued by a landfill facility, licensed to accept hazardous materials, for hazardous waste disposal.

PART 2 - PRODUCTS

(Not Used)

PART 3 - EXECUTION

3.1 EXAMINATION

A. Existing Conditions: The existence and location of site improvements, utilities, and other construction indicated as existing are not guaranteed. Before beginning work, investigate and verify the existence and location of mechanical and electrical systems and other construction affecting the Work.
   1. Before construction, verify the location and points of connection of utility services.

B. Existing Utilities: The existence and location of utilities and other construction indicated as existing are not guaranteed. Before beginning work, investigate and verify the existence and location of utilities and other construction affecting the Work.

C. Acceptance of Conditions: Examine substrates, areas, and conditions, with Installer or Applicator present where indicated, for compliance with requirements for installation tolerances and other conditions affecting performance. Record observations.
   1. Written Report: Where a written report listing conditions detrimental to performance of the Work is required by other Sections, include the following:
      a. Description of the Work.
      b. List of detrimental conditions, including substrates.
      c. List of unacceptable installation tolerances.
      d. Recommended corrections.
   2. Verify compatibility with and suitability of substrates, including compatibility with existing finishes or primers.
   3. Examine roughing-in for mechanical and electrical systems to verify actual locations of connections before equipment and fixture installation.
   4. Examine walls, floors, and roofs for suitable conditions where products and systems are to be installed.
   5. Proceed with installation only after unsatisfactory conditions have been corrected. Proceeding with the Work indicates acceptance of surfaces and conditions.

3.2 PREPARATION

A. Existing Utility Interruptions: Do not interrupt utilities serving facilities occupied unless permitted under the following conditions and then only after arranging to provide temporary utility services according to requirements indicated:
   1. Notify Architect and Owner not less than two days in advance of proposed utility interruptions.
   2. Do not proceed with utility interruptions without Architect's and Owner's written permission.

B. Field Measurements: Take field measurements as required to fit the Work properly. Recheck measurements before installing each product. Where portions of the Work are indicated to fit to other construction, verify dimensions of other construction by field measurements before fabrication. Coordinate fabrication schedule with construction progress to avoid delaying the Work.

C. Space Requirements: Verify space requirements and dimensions of items shown diagrammatically on Drawings.

D. Review of Contract Documents and Field Conditions: Immediately on discovery of the need for clarification of the Contract Documents, submit a request for information to Architect. Include a detailed description of problem encountered, together with recommendations for changing the Contract Documents.

3.3 INSTALLATION

A. General: Locate the Work and components of the Work accurately, in correct alignment and elevation, as indicated.
   1. Make vertical work plumb and make horizontal work level.
   2. Where space is limited, install components to maximize space available for maintenance and ease of removal for replacement.
   3. Conceal pipes, ducts, and wiring in finished areas, unless otherwise indicated.
   4. Maintain minimum headroom clearance as indicated in spaces without a suspended ceiling.

B. Comply with manufacturer's written instructions and recommendations for installing products in applications indicated.

C. Install products at the time and under conditions that will ensure the best possible results. Maintain conditions required for product performance until Substantial Completion.

D. Conduct construction operations so no part of the Work is subjected to damaging operations or loading in excess of that expected during normal conditions of occupancy.

E. Tools and Equipment: Do not use tools or equipment that produce harmful noise levels.

F. Anchors and Fasteners: Provide anchors and fasteners as required to anchor each component securely in place, accurately located and aligned with other portions of the Work.
   1. Mounting Heights: Where mounting heights are not indicated, mount components at heights directed by Architect.
   2. Allow for building movement, including thermal expansion and contraction.

G. Joints: Make joints of uniform width. Where joint locations in exposed work are not indicated, arrange joints for the best visual effect. Fit exposed connections together to form hairline joints.

H. Hazardous Materials: Use products, cleaners, and installation materials that are not considered hazardous.

3.4 PROGRESS CLEANING

A. General: Clean Project site and work areas daily, including common areas. Coordinate progress cleaning for joint-use areas where more than one installer has worked. Enforce requirements strictly. Dispose of materials lawfully.
   1. Comply with requirements in NFPA 241 for removal of combustible waste materials and debris.
   2. Do not hold materials more than 7 days during normal weather or 3 days if the temperature is expected to rise above 80 deg F (27 deg C).
   3. Containerize hazardous and unsanitary waste materials separately from other waste. Mark containers appropriately and dispose of legally, according to regulations.

B. Site: Maintain Project site free of waste materials and debris.

C. Work Areas: Clean areas where work is in progress to the level of cleanliness necessary for proper execution of the Work.
   1. Remove liquid spills promptly.
   2. Where dust would impair proper execution of the Work, broom-clean or vacuum the entire work area, as appropriate.

D. Installed Work: Keep installed work clean. Clean installed surfaces according to written instructions of manufacturer or fabricator of product installed, using only cleaning materials specifically recommended. If specific cleaning materials are not recommended, use cleaning materials that are not hazardous to health or property and that will not damage exposed surfaces.

E. Concealed Spaces: Remove debris from concealed spaces before enclosing the space.

F. Exposed Surfaces: Clean exposed surfaces and protect as necessary to ensure freedom

from damage and deterioration at time of Substantial Completion.

G. Cutting and Patching: Clean areas and spaces where cutting and patching are performed. Completely remove paint, mortar, oils, putty, and similar materials.
   1. Thoroughly clean piping, conduit, and similar features before applying paint or other finishing materials. Restore damaged pipe covering to its original condition.

H. Waste Disposal: Burying or burning waste materials on-site will not be permitted. Washing waste materials down sewers or into waterways will not be permitted.

I. During handling and installation, clean and protect construction in progress and adjoining materials already in place. Apply protective covering where required to ensure protection from damage or deterioration at Substantial Completion.

J. Clean and provide maintenance on completed construction as frequently as necessary through the remainder of the construction period. Adjust and lubricate operable components to ensure operability without damaging effects.

K. Limiting Exposures: Supervise construction operations to assure that no part of the construction, completed or in progress, is subject to harmful, dangerous, damaging, or otherwise deleterious exposure during the construction period.

3.5 STARTING AND ADJUSTING

A. Start equipment and operating components to confirm proper operation. Remove malfunctioning units, replace with new units, and retest.

B. Adjust operating components for proper operation without binding. Adjust equipment for proper operation.

C. Test each piece of equipment to verify proper operation. Test and adjust controls and safeties. Replace damaged and malfunctioning controls and equipment.

D. Manufacturer's Field Service: If a factory-authorized service representative is required to inspect field-assembled components and equipment installation, comply with qualification requirements in Division 1 Section "Quality Requirements."

3.6 PROTECTION OF INSTALLED CONSTRUCTION

A. Provide final protection and maintain conditions that ensure installed Work is without damage or deterioration at time of Substantial Completion.

B. Comply with manufacturer's written instructions for temperature and relative humidity.

3.7 CORRECTION OF THE WORK

A. Repair or remove and replace defective construction. Restore damaged substrates and finishes. Comply with requirements in Division 1 Section "Cutting and Patching."
   1. Repairing includes replacing defective parts, refinishing damaged surfaces, touching up with matching materials, and properly adjusting operating equipment.

B. Restore permanent facilities used during construction to their specified condition.

C. Remove and replace damaged surfaces that are exposed to view if surfaces cannot be repaired without visible evidence of repair.

D. Repair components that do not operate properly. Remove and replace operating components that cannot be repaired.

E. Remove and replace chipped, scratched, and broken glass or reflective surfaces.

END OF SECTION 01700

SECTION 01770 - CLOSEOUT PROCEDURES October 3, 2006

PART 1 - GENERAL

1.1 RELATED DOCUMENTS

A. Drawings and general provisions of the Contract, including General and Supplementary Conditions and other Division 1 Specification Sections, apply to this Section.

1.2 SUMMARY

A. This Section includes administrative and procedural requirements for contract closeout, including, but not limited to, the following:
   1. Inspection procedures.
   2. Warranties.
   3. Final cleaning.

B. Related Sections include the following:
   1. Division 1 Section "Payment Procedures" for requirements for Applications for Payment for Substantial and Final Completion.
   2. Division 1 Section "Execution Requirements" for progress cleaning of Project site.
   3. Division 1 Section "Project Record Documents" for submitting Record Drawings, Record Specifications, and Record Product Data.
   4. Divisions 2 through 16 Sections for specific closeout and special cleaning requirements for the Work in those Sections.

1.3 SUBSTANTIAL COMPLETION

A. Preliminary Procedures: Before requesting inspection for determining date of Substantial Completion, complete the following. List items below that are incomplete in request.
   1. Prepare a list of items to be completed and corrected (punch list), the value of items on the list, and reasons why the Work is not complete.
      a. Inspection shall be done with Roofing Manufacturer's Field representative present.
   2. Advise Owner of pending insurance changeover requirements.
   3. Submit specific warranties, workmanship bonds, maintenance service agreements, final certifications, and similar documents.
   4. Obtain and submit releases permitting Owner unrestricted use of the Work and access to services and utilities. Include occupancy permits, operating certificates, and similar releases.
   5. Prepare and submit Project Record Documents, operation and maintenance manuals, Final Completion construction photographs, damage or settlement surveys, property surveys, and similar final record information.
   6. Deliver tools, spare parts, extra materials, and similar items to location designated by Owner. Label with manufacturer's name and model number where applicable.
   7. Make final changeover of permanent locks and deliver keys to Owner. Advise Owner's personnel of changeover in security provisions.
   8. Complete startup testing of systems.
   9. Submit test/adjust/balance records.
   10. Terminate and remove temporary facilities from Project site, along with mockups, construction tools, and similar elements.
   11. Advise Owner of changeover in heat and other utilities.

12. Submit changeover information related to Owner's occupancy, use, operation, and maintenance.
13. Complete final cleaning requirements, including touchup painting.
14. Touch up and otherwise repair and restore marred exposed finishes to eliminate visual defects.

B. Inspection: Submit a written request for inspection for Substantial Completion. On receipt of request, Architect will either proceed with inspection or notify Contractor of unfulfilled requirements. Architect will prepare the Certificate of Substantial Completion after inspection or will notify Contractor of items, either on Contractor's list or additional items identified by Architect, that must be completed or corrected before certificate will be issued.
1. Reinspection: Request reinspection when the Work identified in previous inspections as incomplete is completed or corrected.
2. Results of completed inspection will form the basis of requirements for Final Completion.

1.4 FINAL COMPLETION

A. Preliminary Procedures: Before requesting final inspection for determining date of Final Completion, complete the following:
1. Submit a final Application for Payment according to Division 1 Section "Payment Procedures."
2. Submit certified copy of Architect's Substantial Completion inspection list of items to be completed or corrected (punch list), endorsed and dated by Architect. The certified copy of the list shall state that each item has been completed or otherwise resolved for acceptance.
3. Submit evidence of final, continuing insurance coverage complying with insurance requirements.
4. Instruct Owner's personnel in operation, adjustment, and maintenance of products, equipment, and systems. Submit demonstration and training videotapes.

B. Inspection: Submit a written request for final inspection for acceptance. On receipt of request, Architect will either proceed with inspection or notify Contractor of unfulfilled requirements. Architect will prepare a final Certificate for Payment after inspection or will notify Contractor of construction that must be completed or corrected before certificate will be issued.
1. Reinspection: Request reinspection when the Work identified in previous inspections as incomplete is completed or corrected.
a. Inspection shall be done with Roofing Manufacturer’s Field representative present.

1.5 LIST OF INCOMPLETE ITEMS (PUNCH LIST)

A. Preparation: Submit three copies of list. Include name and identification of each space and area affected by construction operations for incomplete items and items needing correction including, if necessary, areas disturbed by Contractor that are outside the limits of construction.
1. Organize list of spaces in sequential order, starting with exterior areas first and proceeding from lowest floor to highest floor.
2. Organize items applying to each space by major element, including categories for ceiling, individual walls, floors, equipment, and building systems.
3. Include the following information at the top of each page:
a. Project name.

b. Date.
c. Name of Architect.
d. Name of Contractor.
e. Page number.

1.6 WARRANTIES

A. Submittal Time: Submit written warranties on request of Architect for designated portions of the Work where commencement of warranties other than date of Substantial Completion is indicated.

B. Organize warranty documents into an orderly sequence based on the table of contents of the Project Manual.
1. Bind warranties and bonds in heavy-duty, 3-ring, vinyl-covered, loose-leaf binders, thickness as necessary to accommodate contents, and sized to receive 8-1/2-by-11-inch (215-by-280-mm) paper.
2. Provide heavy paper dividers with plastic-covered tabs for each separate warranty. Mark tab to identify the product or installation. Provide a typed description of the product or installation, including the name of the product and the name, address, and telephone number of Installer.
3. Identify each binder on the front and spine with the typed or printed title "WARRANTIES," Project name, and name of Contractor.

C. Provide additional copies of each warranty to include in operation and maintenance manuals.

D. Complete and submit the following warranties and documents included at the end of this Section:
1. DFCM Roofing History Record – Single Ply Roofing.
2. DFCM Contractor Roofing Warranty.
3. DFCM Warranty for Single Ply Roofing.

PART 2 - PRODUCTS

2.1 MATERIALS

A. Cleaning Agents: Use cleaning materials and agents recommended by manufacturer or fabricator of the surface to be cleaned. Do not use cleaning agents that are potentially hazardous to health or property or that might damage finished surfaces.

PART 3 - EXECUTION

3.1 FINAL CLEANING

A. General: Provide final cleaning. Conduct cleaning and waste-removal operations to comply with local laws and ordinances and Federal and local environmental and antipollution regulations.

B. Cleaning: Employ experienced workers or professional cleaners for final cleaning. Clean each surface or unit to condition expected in an average commercial building cleaning and maintenance program. Comply with manufacturer's written instructions.
1. Complete the following cleaning operations before requesting inspection for

certification of Substantial Completion for entire Project or for a portion of Project:

a. Clean Project site, yard, and grounds, in areas disturbed by construction activities, including landscape development areas, of rubbish, waste material, litter, and other foreign substances.

b. Sweep paved areas broom clean. Remove petrochemical spills, stains, and other foreign deposits.

c. Rake grounds that are neither planted nor paved to a smooth, even-textured surface.

d. Remove tools, construction equipment, machinery, and surplus material from Project site.

e. Clean exposed exterior and interior hard-surfaced finishes to a dirt-free condition, free of stains, films, and similar foreign substances. Avoid disturbing natural weathering of exterior surfaces. Restore reflective surfaces to their original condition.

f. Remove debris and surface dust from limited access spaces, including roofs, and similar spaces.

g. Clean transparent materials, including mirrors and glass in doors and windows. Remove glazing compounds and other noticeable, vision-obscuring materials. Replace chipped or broken glass and other damaged transparent materials. Polish mirrors and glass, taking care not to scratch surfaces.

h. Remove labels that are not permanent.

i. Touch up and otherwise repair and restore marred, exposed finishes and surfaces. Replace finishes and surfaces that cannot be satisfactorily repaired or restored or that already show evidence of repair or restoration.

   1) Do not paint over "UL" and similar labels, including mechanical and electrical nameplates.

j. Wipe surfaces of mechanical and electrical equipment and similar equipment. Remove excess lubrication, paint and mortar droppings, and other foreign substances.

k. Replace parts subject to unusual operating conditions.

l. Leave Project clean and ready for occupancy.

C. Comply with safety standards for cleaning. Do not burn waste materials. Do not bury debris or excess materials on Owner's property. Do not discharge volatile, harmful, or dangerous materials into drainage systems. Remove waste materials from Project site and dispose of lawfully.

END OF SECTION 01770

DIVISION 2 thru DIVISION 5

Not Used

DIVISION 6 - WOOD AND PLASTIC

Section 06105 Miscellaneous Carpentry

SECTION 06105 - MISCELLANEOUS CARPENTRY October 3, 2006

PART 1 - GENERAL

1.1 RELATED DOCUMENTS

A. Drawings and general provisions of the Contract, including General and Supplementary Conditions and Division 1 Specification Sections, apply to this Section.

1.2 SUMMARY

A. This Section includes the following:
1. Rooftop equipment bases and support curbs.
2. Wood furring, grounds, nailers, cant strips and blocking.
3. Solid-sawn wood decking.
4. Sheathing.
5. Framing and blocking for damaged wood blocking replacement.
6. Framing and blocking for expansion joint curbs.
7. Framing and blocking for perimeter edges.
8. Framing and blocking for skylight curbs.

1.3 SUBMITTALS

A. General: Submit each item in this Article according to the Conditions of the Contract and Division 1 Specification Sections.

B. Wood treatment data as follows, including chemical treatment manufacturer's instructions for handling, storing, installing, and finishing treated materials:
1. For each type of preservative-treated wood product, include certification by treating plant stating type of preservative solution and pressure process used, net amount of preservative retained, and compliance with applicable standards.
2. For waterborne-treated products, include statement that moisture content of treated materials was reduced to levels indicated before shipment to Project site.

C. Material test reports from a qualified independent testing agency indicating and interpreting test results relative to compliance of fire-retardant-treated wood products with performance requirements indicated.

D. Warranty of chemical treatment manufacturer for each type of treatment.

1.4 DELIVERY, STORAGE, AND HANDLING

A. Keep materials under cover and dry. Protect from weather and contact with damp or wet surfaces. Stack lumber, plywood, and other panels. Provide for air circulation within and around stacks and under temporary coverings.
1. For lumber and plywood pressure treated with waterborne chemicals, place spacers between each bundle to provide air circulation.

PART 2 - PRODUCTS

2.1 LUMBER, GENERAL

A. Lumber Standards: Comply with DOC PS 20, "American Softwood Lumber Standard," and with applicable grading rules of inspection agencies certified by American Lumber Standards Committee's (ALSC) Board of Review.

B. Inspection Agencies: Inspection agencies, and the abbreviations used to reference them, include the following:
   1. NELMA - Northeastern Lumber Manufacturers Association.
   2. RIS - Redwood Inspection Service.
   3. SPIB - Southern Pine Inspection Bureau.
   4. WCLIB - West Coast Lumber Inspection Bureau.
   5. WWPA - Western Wood Products Association.

C. Grade Stamps: Provide lumber with each piece factory marked with grade stamp of inspection agency evidencing compliance with grading rule requirements and identifying grading agency, grade, species, moisture content at time of surfacing, and mill.
   1. For exposed lumber, furnish pieces with grade stamps applied to ends or back of each piece.

D. Where nominal sizes are indicated, provide actual sizes required by DOC PS 20 for moisture content specified. Where actual sizes are indicated, they are minimum dressed sizes for dry lumber.
   1. Provide dressed lumber, S4S, unless otherwise indicated.
   2. Provide dry lumber with 19 percent maximum moisture content at time of dressing for 2-inch nominal (38-mm actual) thickness or less, unless otherwise indicated.

2.2 WOOD-PRESERVATIVE-TREATED MATERIALS

A. General: All lumber or plywood shall be preservative treated. Comply with applicable requirements of AWPA C2 (lumber) and AWPA C9 (plywood). Mark each treated item with the Quality Mark Requirements of an inspection agency approved by ALSC's Board of Review.
   1. Do not use chemicals containing chromium or arsenic.

B. Pressure treat aboveground items with waterborne preservatives to a minimum retention of 0.25 lb/cu. ft. (4.0 kg/cu. m). After treatment, kiln-dry lumber and plywood to a maximum moisture content of 19 and 15 percent, respectively. Treat indicated items and the following:
   1. Wood cants, nailers, curbs, equipment support bases, blocking, stripping, and similar members in connection with roofing, flashing, vapor barriers, and waterproofing.
   2. Wood sills, sleepers, blocking, furring, stripping, and similar concealed members in contact with masonry or concrete.

C. Pressure treat wood members in contact with ground or freshwater with waterborne preservatives to a minimum retention of 0.40 lb/cu. ft. (6.4 kg/cu. m).

2.3 FIRE-RETARDANT TREATMENT BY PRESSURE PROCESS

A. General: Where fire-retardant-treated wood is indicated, pressure impregnate lumber and

plywood with fire-retardant chemicals to comply with AWPA C20 and C27, respectively, for treatment type indicated; identify "fire-retardant-treated wood" with appropriate classification marking of Underwriters Laboratories, Inc., U.S. Testing, Timber Products Inspection, Inc. or other testing and inspecting agency acceptable to authorities having jurisdiction.

1. Current Evaluation/Research Reports: Provide fire-retardant- treated wood for which a current model code evaluation/research report exists that is acceptable to authorities having jurisdiction and that evidences compliance of fire-retardant-treated wood for application indicated.

B. Exterior Type: Use for exterior locations and where indicated.

C. Inspect each piece of treated lumber or plywood after drying and discard damaged or defective pieces.

D. Products: Subject to compliance with requirements, provide one of the following:

1. Exterior Type Fire-Retardant-Treated Wood:

a. "Exterior Fire-X," Hoover Treated Wood Products.

2.4 DIMENSION LUMBER

A. General: Provide dimension lumber of grades indicated according to the ALSC National Grading Rule (NGR) provisions of the inspection agency indicated.

1. Grade: Construction, Stud, or No. 2.
2. Species: Hem-fir or douglas-fir; WCLIB or WWPA.

2.5 SOLID-SAWN WOOD DECKING

A. Decking Species: Balsam fir, Douglas fir-larch, Douglas fir-larch (North), hem-fir, hem-fir (North), southern pine, spruce pine-fir (North), western hemlock, or western hemlock (North).

B. Decking Nominal Size: Match existing.

C. Decking Grade: Select Decking.

D. Face Surface: Smooth.

E. Edge Pattern: Beaded edge.

2.6 MISCELLANEOUS LUMBER

A. General: Provide lumber for support or attachment of other construction, including rooftop equipment curbs and support bases, cant strips, bucks, nailers, blocking, furring, grounds, stripping, and similar members.

B. Fabricate miscellaneous lumber from dimension lumber of sizes indicated and into shapes shown.

C. Moisture Content: 19 percent maximum for lumber items are not specified to receive wood preservative treatment.

D. Grade: For dimension lumber sizes, provide No. 3 or Standard grade lumber per ALSC's NGRs of any species. For board-size lumber, provide No. 3 Common grade per NELMA,

NLGA, or WWPA; No. 2 grade per SPIB; or Standard grade per NLGA, WCLIB or WWPA of any species.

2.7 WOOD-BASED STRUCTURAL-USE PANELS

A. Structural-Use Panel Standards: Provide either all-veneer, mat-formed, or composite panels complying with DOC PS 2, "Performance Standard for Wood-Based Structural-Use Panels," unless otherwise indicated. Provide plywood panels complying with DOC PS 1, "U.S. Product Standard for Construction and Industrial Plywood," where plywood is indicated.

B. Trademark: Factory mark structural-use panels with APA trademark evidencing compliance with grade requirements.
   1. Span Ratings: Provide panels with span ratings required to meet "Code Plus" provisions of APA Form No. E30, "APA Design/Construction Guide: Residential & Commercial."

C. Miscellaneous Concealed Plywood: C-C Plugged Exterior, thickness as indicated but not less than 1/2 inch (12.7 mm).

2.8 FASTENERS

A. General: Provide fasteners of size and type indicated that comply with requirements specified in this Article for material and manufacture.
   1. Where miscellaneous carpentry is exposed to weather, in ground contact, or in area of high relative humidity, provide fasteners with a hot-dip zinc coating per ASTM A 153 or of Type 304 stainless steel.

B. Nails, Wire, Brads, and Staples: FS FF-N-105.

C. Power-Driven Fasteners: CABO NER-272.

D. Bolts: Steel bolts complying with ASTM A 307, Grade A (ASTM F 568, Property Class 4.6); with ASTM A 563 (ASTM A 563M) hex nuts and, where indicated, flat washers.

2.9 METAL FRAMING ANCHORS

A. General: Provide galvanized steel framing anchors of structural capacity, type, and size indicated and as follows:
   1. Research or Evaluation Reports: Provide products for which model code research or evaluation reports exist that are acceptable to authorities having jurisdiction and that evidence compliance of metal framing anchors for application indicated with building code in effect for Project.
   2. Allowable Design Loads: Provide products with allowable design loads, as published by manufacturer, that meet or exceed those indicated. Manufacturer's published values shall be determined from empirical data or by rational engineering analysis, and demonstrated by comprehensive testing performed by a qualified independent testing agency.

B. Galvanized Steel Sheet: Hot-dip, zinc-coated steel sheet complying with ASTM A 653, G60 (ASTM A 653M, Z180) coating designation; structural, commercial, or lock-forming quality, as standard with manufacturer for type of anchor indicated.

C. Joist Hangers: U-shaped joist hangers with 2-inch- (50-mm-) long seat and 1-1/4-inch- (32-mm-) wide nailing flanges at least 85 percent of joist depth.
   1. Thickness: 0.064 inch (1.6 mm).

PART 3 - EXECUTION

3.1 INSTALLATION, GENERAL

A. Discard units of material with defects that impair quality of carpentry and that are too small to use with minimum number of joints or optimum joint arrangement.

B. Set carpentry to required levels and lines, with members plumb, true to line, cut, and fitted.

C. Fit carpentry to other construction; scribe and cope as required for accurate fit. Correlate location of furring, nailers, blocking, grounds, and similar supports to allow attachment of other construction.

D. Apply field treatment complying with AWPA M4 to cut surfaces of preservative-treated lumber and plywood.

E. Securely attach carpentry work as indicated and according to applicable codes and recognized standards.

F. Use fasteners of appropriate type and length. Predrill members when necessary to avoid splitting wood.

3.2 WOOD GROUNDS, NAILERS, BLOCKING, CANT STRIPS AND SLEEPERS

A. Install where shown and where required for screeding or attaching other work. Cut and shape to required size. Coordinate locations with other work involved.
   1. Provide new wood blocking as required to replace all damaged or deteriorated existing wood nailers or blocking.

B. Attach to substrates to support applied loading. Recess bolts and nuts flush with surfaces, unless otherwise indicated.

3.3 WOOD FURRING

A. Install plumb and level with closure strips at edges and openings. Shim with wood as required for tolerance of finish work.

3.4 INSTALLATION OF STRUCTURAL-USE PANELS

A. General: Comply with applicable recommendations contained in APA Form No. E30, "APA Design/Construction Guide: Residential & Commercial," for types of structural-use panels and applications indicated.
   1. Comply with "Code Plus" provisions of above-referenced guide.

3.5 EXPANSION JOINTS

A. Install continuous wood framing and blocking as shown on the plans and as required by field

conditions to raise and/or rebuild the existing expansion joint curb to a height that allows the base flashing to be a minimum height of 8 inches above the new membrane. Curb shall be framed out as needed to provide continuous flush curb for base flashing. Framing shall be anchored to wood deck using appropriate type, length and spacing of fasteners.

3.6 PLYWOOD DECKING

A. Provide new plywood decking to replace all damaged or deteriorated plywood decking as required by field conditions and/or as directed by the Architect. Plywood decking shall match existing decking in thickness.

B. Provide new plywood decking over the existing wood plank decking as indicated on the structural drawings.

3.7 PERIMETER EDGES

A. Install continuous wood framing and blocking as shown:
   1. To the height required by field conditions.
   2. To form a perimeter wall and provide solid backing for application of new metal fascia. Framing shall be anchored to the deck using appropriate type, length and spacing of fasteners as required by field conditions.

END OF SECTION 06105

DIVISION 7 - THERMAL AND MOISTURE PROTECTION

Section 07540	Thermoplastic Membrane Roofing
Section 07591	Membrane Reroofing Preparation
Section 07620	Sheet Metal Flashing and Trim
Section 07720	Roof Accessories

SECTION 07540 - THERMOPLASTIC MEMBRANE ROOFING October 3, 2006

PART 1 - GENERAL

1.1 RELATED DOCUMENTS

A. Drawings and general provisions of the Contract, including General and Supplementary Conditions and Division 1 Specification Sections, apply to this Section.

1.2 SUMMARY

A. This Section includes the following:
1. Adhered membrane roofing system.
2. Roof insulation.

B. Related Sections include the following:
1. Division 6 Section "Miscellaneous Carpentry" for wood nailers, curbs, and blocking.
2. Division 7 Section "Sheet Metal Flashing and Trim" for metal roof penetration flashings, flashings, and counterflashings.
3. Division 7 Section "Joint Sealants."
4. Division 15 Section "Plumbing Specialties" for roof drains.

1.3 DESCRIPTION OF WORK

A. Furnish labor, equipment and materials as required to complete each type of thermoplastic membrane roofing and flashing work as indicated on drawings and by provisions of this Section, including but not limited to the following:

Auto Trades Building:
a. Clean substrate to receive new roof membrane.
b. Prime concrete decks.
c. Mop substrate board to concrete deck or fully adhere.
d. Adhere new thermoplastic membrane to substrate board.
e. Install base flashing.
f. Install new walkway pads.

1.4 DEFINITIONS

A. Roofing Terminology: Refer to ASTM D 1079 and glossary of NRCA's "The NRCA Roofing and Waterproofing Manual" for definition of terms related to roofing work in this Section.

B. Design Uplift Pressure: The uplift pressure, calculated according to procedures in SPRI's "Wind Load Design Guide for Fully Adhered and Mechanically Fastened Roofing Systems," before multiplication by a safety factor.

C. Factored Design Uplift Pressure: The uplift pressure, calculated according to procedures in SPRI's "Wind Load Design Guide for Fully Adhered and Mechanically Fastened Roofing Systems," after multiplication by a safety factor.

1.5 PERFORMANCE REQUIREMENTS

A. General: Provide installed roofing membrane and base flashings that remain watertight; do not permit the passage of water; and resist specified uplift pressures, thermally induced

movement, and exposure to weather without failure.

B. Material Compatibility: Provide roofing materials that are compatible with one another under conditions of service and application required, as demonstrated by roofing membrane manufacturer based on testing and field experience.

C. FMG Listing: Provide roofing membrane, base flashings, and component materials that comply with requirements in FMG 4450 and FMG 4470 as part of a membrane roofing system and that are listed in FMG's "Approval Guide" for Class 1 or noncombustible construction, as applicable. Identify materials with FMG markings.
   1. Fire/Windstorm Classification: Class 1A-90.
   2. Hail Resistance: SH.
   3. UL- Roofing materials and systems directory

1.6 SUBMITTALS

A. Product Data: For each type of product indicated.

B. Shop Drawings: For roofing system. Include plans, elevations, sections, details, and attachments to other Work.
   1. Base flashings and membrane terminations.
   2. Insulation fastening patterns.

C. Samples for Verification: For the following products:
   1. 12-by-12-inch (300-by-300-mm) square of sheet roofing, of color specified, including T-shaped side and end lap seam.
   2. 12-by-12-inch (300-by-300-mm) square of roof insulation.
   3. 12-by-12-inch (300-by-300-mm) square of walkway pads or rolls.
   4. 12-inch (300-mm) length of metal termination bars.
   5. 12-inch (300-mm) length of battens.
   6. Six insulation fasteners of each type, length, and finish.
   7. Six roof cover fasteners of each type, length, and finish.

D. Installer Certificates: Signed by roofing system manufacturer certifying that Installer is approved, authorized, or licensed by manufacturer to install roofing system.

E. Manufacturer Certificates: Signed by roofing manufacturer certifying that roofing system complies with requirements specified in "Performance Requirements" Article.
   1. Submit evidence of meeting performance requirements.

F. Qualification Data: For Installer and manufacturer.

G. Product Test Reports: Based on evaluation of comprehensive tests performed by manufacturer and witnessed by a qualified testing agency, for components of roofing system.

H. Maintenance Data: For roofing system to include in maintenance manuals.

I. Warranties: Special warranties specified in this Section.

J. Inspection Report: Copy of roofing system manufacturer's inspection report of completed roofing installation.

1.7 QUALITY ASSURANCE

A. Installer Qualifications: A qualified firm that is approved, authorized, or licensed by roofing system manufacturer to install manufacturer's product and that is eligible to receive manufacturer's warranty.

B. Manufacturer Qualifications: A qualified manufacturer that has FMG approval for membrane roofing system identical to that used for this Project.

C. Source Limitations: Obtain components for membrane roofing system from or approved by roofing membrane manufacturer.

D. Fire-Test-Response Characteristics: Provide membrane roofing materials with the fire-test-response characteristics indicated as determined by testing identical products per test method below by UL, FMG, or another testing and inspecting agency acceptable to authorities having jurisdiction. Materials shall be identified with appropriate markings of applicable testing and inspecting agency.
   1. Exterior Fire-Test Exposure: Class A; ASTM E 108, for application and roof slopes indicated.
   2. Fire-Resistance Ratings: ASTM E 119, for fire-resistance-rated roof assemblies of which roofing system is a part.

E. Preinstallation Conference: Conduct conference at Project site. Comply with requirements in Division 1 Section "Project Management and Coordination." Review methods and procedures related to roofing system including, but not limited to, the following:
   1. Meet with Owner, Architect, Owner's insurer if applicable, testing and inspecting agency representative, roofing Installer, roofing system manufacturer's representative, deck Installer, and installers whose work interfaces with or affects roofing including installers of roof accessories and roof-mounted equipment.
   2. Review methods and procedures related to roofing installation, including manufacturer's written instructions.
   3. Review and finalize construction schedule and verify availability of materials, Installer's personnel, equipment, and facilities needed to make progress and avoid delays.
   4. Examine deck substrate conditions and finishes for compliance with requirements, including flatness and fastening.
   5. Review structural loading limitations of roof deck during and after roofing.
   6. Review base flashings, special roofing details, roof drainage, roof penetrations, equipment curbs, and condition of other construction that will affect roofing system.
   7. Review governing regulations and requirements for insurance and certificates if applicable.
   8. Review temporary protection requirements for roofing system during and after installation.
   9. Review roof observation and repair procedures after roofing installation.

1.8 DELIVERY, STORAGE, AND HANDLING

A. Deliver roofing materials to Project site in original containers with seals unbroken and labeled with manufacturer's name, product brand name and type, date of manufacture, and directions for storing and mixing with other components.

B. Store liquid materials in their original undamaged containers in a clean, dry, protected location and within the temperature range required by roofing system manufacturer. Protect stored liquid material from direct sunlight.

1. Discard and legally dispose of liquid material that cannot be applied within its stated shelf life.

C. Protect roof insulation materials from physical damage and from deterioration by sunlight, moisture, soiling, and other sources. Store in a dry location. Comply with insulation manufacturer's written instructions for handling, storing, and protecting during installation.

D. Handle and store roofing materials and place equipment in a manner to avoid permanent deflection of deck.

1.9 PROJECT CONDITIONS

A. Weather Limitations: Proceed with installation only when existing and forecasted weather conditions permit roofing system to be installed according to manufacturer's written instructions and warranty requirements.

1.10 WARRANTY

A. Special Warranty: Manufacturer's standard form, without monetary limitation, in which manufacturer agrees to repair or replace components of membrane roofing system that fail in materials or workmanship within specified warranty period. Failure includes roof leaks.
   1. Special warranty includes roofing membrane, base flashings, roofing membrane accessories, roof insulation, fasteners, walkway products and other components of membrane roofing system.
   2. Warranty Period: 20 years from date of Substantial Completion.

B. Special Project Warranty: Submit roofing Installer's warranty against all leaks, on warranty form at end of this Section, signed by Installer, covering Work of this Section, including all components of membrane roofing system such as roofing membrane, base flashing, roof insulation, fasteners, cover boards, substrate boards, vapor retarders, roof pavers, and walkway products, for the following warranty period:
   1. Warranty Period: Three years from date of Substantial Completion.

PART 2 - PRODUCTS

2.1 MANUFACTURERS

A. In other Part 2 articles where titles below introduce lists, the following requirements apply for product selection:
   1. Available Products: Subject to compliance with requirements, products that may be incorporated into the Work include, but are not limited to, the products specified.
   2. Available Manufacturers: Subject to compliance with requirements, manufacturers offering products that may be incorporated into the Work include, but are not limited to, the manufacturers specified.

2.2 PVC ROOFING MEMBRANE

A. PVC Sheet: ASTM D 4434, Type III, fabric reinforced.
   1. Available Manufacturers:
      a. Firestone Building Products Company.
      b. GenFlex Roofing Systems.
      c. Johns Manville International, Inc.

d. Sarnafil Inc.
e. Other manufacturer=s shall submit for approval prior to bidding.

2. Thickness: 60 mils (1.5 mm), nominal.
3. Exposed Face Color: White.

2.3 THERMOPLASTIC POLYOLEFIN ROOFING MEMBRANE (optional)

A. Fabric-Reinforced Thermoplastic Polyolefin Sheet: Uniform, flexible sheet formed from a thermoplastic polyolefin, internally fabric or scrim reinforced, and as follows:

1. Available Manufacturers:
   a. Carlisle SynTec Incorporated.
   b. Firestone Building Products Company.
   c. GenFlex Roofing Systems.
   d. Johns Manville International, Inc.
   e. Stevens Roofing Systems; Div. of JPS Elastomerics.
   f. Other manufacturer=s shall submit for approval prior to bidding.
2. Thickness: 60 mils (1.5 mm), nominal.
3. Exposed Face Color: White.
4. Physical Properties:
   a. Breaking Strength: 225 lbf (1 kN); ASTM D 751, grab method.
   b. Elongation at Break: 15 percent; ASTM D 751.
   c. Tearing Strength: 55 lbf (245 N) minimum; ASTM D 751, Procedure B.
   d. Brittleness Point: Minus 22 deg F (30 deg C).
   e. Ozone Resistance: No cracks after sample, wrapped around a 3-inch-(75-mm-) diameter mandrel, is exposed for 166 hours to a temperature of 104 deg F (40 deg C) and an ozone level of 100 pphm (100 mPa); ASTM D 1149.
   f. Resistance to Heat Aging: 90 percent minimum retention of breaking strength, elongation at break, and tearing strength after 166 hours at 240 deg F (116 deg C); ASTM D 573.
   g. Water Absorption: Less than 4 percent mass change after 166 hours' immersion at 158 deg F (70 deg C); ASTM D 471.
   h. Linear Dimension Change: Plus or minus 2 percent; ASTM D 1204.

2.4 AUXILIARY MATERIALS

A. General: Auxiliary materials recommended by roofing system manufacturer for intended use and compatible with membrane roofing.

1. Liquid-type auxiliary materials shall meet VOC limits of authorities having jurisdiction.

B. Sheet Flashing: Manufacturer's standard sheet flashing of same material, type, reinforcement, thickness, and color as PVC sheet membrane.

C. Bonding Adhesive: Manufacturer's standard solvent-based bonding adhesive for membrane, and solvent-based bonding adhesive for base flashings.

D. Slip Sheet: Manufacturer's recommended slip sheet, of type required for application.

E. Metal Termination Bars: Manufacturer's standard predrilled stainless-steel or aluminum bars, approximately 1 by 1/8 inch (25 by 3 mm) thick; with anchors.

F. Metal Battens: Manufacturer's standard aluminum-zinc-alloy-coated or zinc-coated steel sheet, approximately 1 inch (25 mm) wide by 0.05 inch (1.3 mm) thick, prepunched.

G. Fasteners: Factory-coated steel fasteners and metal or plastic plates meeting corrosion-resistance provisions in FMG 4470, designed for fastening membrane to substrate, and acceptable to membrane roofing system manufacturer.

H. Miscellaneous Accessories: Provide pourable sealers, preformed cone and vent sheet flashings, preformed inside and outside corner sheet flashings, T-joint covers, termination reglets, cover strips, and other accessories.

2.5 SUBSTRATE BOARDS

A. Substrate Board: ASTM C 1177/C 1177M, glass-mat, water-resistant gypsum substrate, ½" Dens-deck Prime

1. Product: Subject to compliance with requirements, provide "Dens-Deck" prime by Georgia-Pacific Corporation or equal.

B. Fasteners: Factory-coated steel fasteners and metal or plastic plates meeting corrosion-resistance provisions in FMG 4470, designed for fastening substrate panel to roof deck.

2.6 ROOF INSULATION

A. General: Provide preformed roof insulation boards that comply with requirements and referenced standards, selected from manufacturer's standard sizes and of thicknesses indicated.

B. Molded-Polystyrene Board Insulation: Where tapered insulation, crickets, saddles, tapered edge strips, or other insulation shapes are indicated or required provide molded-polystyrene board insulation complying with ASTM C 578 Type IX, 1.8-lb/cu. ft. (29-kg/cu. m) minimum density.

1. Available Manufacturers:
   a. Manufacturers with a third-party certification program satisfying model building code mandatory requirements for foam plastics and that produce FMG-approved molded polystyrene.

C. Provide preformed saddles, crickets, tapered edge strips, and other insulation shapes as required and where indicated for sloping to drain. Fabricate to slopes indicated.

2.7 INSULATION ACCESSORIES

A. General: Roof insulation accessories recommended by insulation manufacturer for intended use and compatible with membrane roofing.

B. Fasteners: Factory-coated steel fasteners and metal or plastic plates meeting corrosion-resistance provisions in FMG 4470, designed for fastening roof insulation to substrate, and acceptable to roofing system manufacturer.

2.8 ASPHALT MATERIALS

A. Roofing Asphalt: ASTM D 312, Type III or IV.

B. Asphalt Primer: ASTM D 41.

2.9 WALKWAYS

A. Flexible Walkways: Factory-formed, nonporous, heavy-duty, solid-rubber, slip-resisting, surface-textured walkway pads or rolls, approximately 3/16 inch (5 mm) thick, and acceptable to membrane roofing system manufacturer.

PART 3 - EXECUTION

3.1 EXAMINATION

A. Examine substrates, areas, and conditions, with Installer present, for compliance with the following requirements and other conditions affecting performance of roofing system:
   1. Verify that roof openings and penetrations are in place and set and braced and that roof drains are securely clamped in place.
   2. Verify that wood blocking, curbs, and nailers are securely anchored to roof deck at penetrations and terminations and that nailers match thicknesses of insulation.
   3. Inspect condition of existing Double Tec Concrete Roof Deck
   4. Verify that minimum concrete drying period recommended by roofing system manufacturer has passed.
   5. Verify that concrete substrate is visibly dry and free of moisture. Test for capillary moisture by plastic sheet method according to ASTM D 4263.
   6. Verify that concrete curing compounds that will impair adhesion of roofing components to roof deck have been removed.
   7. Proceed with installation only after unsatisfactory conditions have been corrected.

3.2 PREPARATION

A. Clean substrate of dust, debris, moisture, and other substances detrimental to roofing installation according to roofing system manufacturer's written instructions. Remove sharp projections.

B. Prevent materials from entering and clogging roof drains and conductors and from spilling or migrating onto surfaces of other construction. Remove roof-drain plugs when no work is taking place or when rain is forecast.

C. Complete terminations and base flashings and provide temporary seals to prevent water from entering completed sections of roofing system at the end of the workday or when rain is forecast. Remove and discard temporary seals before beginning work on adjoining roofing.

3.3 SUBSTRATE BOARD INSTALLATION

A. Install substrate board with long joints in continuous straight lines, perpendicular to roof slopes with end joints staggered between rows. Tightly butt substrate boards together.

   1. Fasten substrate board according to recommendations in FMG's "Approval Guide" for specified Windstorm Resistance Classification.

3.4 INSULATION INSTALLATION

A. Coordinate installing membrane roofing system components so insulation is not exposed to precipitation or left exposed at the end of the workday.

B. Comply with membrane roofing system manufacturer's written instructions for installing roof

insulation.

C. Install substrate board to conform to slopes indicated.

D. Trim surface of insulation where necessary at roof drains so completed surface is flush and does not restrict flow of water.

E. Install insulation with long joints of insulation in a continuous straight line with end joints staggered between rows, abutting edges and ends between boards. Fill gaps exceeding 1/4 inch (6 mm) with insulation.
   1. Cut and fit insulation within 1/4 inch (6 mm) of nailers, projections, and penetrations.

F. Adhered Insulation (Where Indicated): Install each layer of insulation and adhere to substrate as follows:

   1. Prime surface of concrete deck with asphalt primer at a rate of 3/4 gal./100 sq. ft. (0.3 L/sq. m) and allow primer to dry.
   2. Set each layer of insulation in a solid mopping of hot roofing asphalt, applied within plus or minus 25 deg F (14 deg C) of equiviscous temperature.

3.5 ADHERED ROOFING MEMBRANE INSTALLATION

A. Install roofing membrane over area to receive roofing according to membrane roofing system manufacturer's written instructions. Unroll roofing membrane and allow to relax before installing.

   1. Install sheet according to ASTM D 5036.

B. Start installation of roofing membrane in presence of membrane roofing system manufacturer's technical personnel.

C. Accurately align roofing membrane and maintain uniform side and end laps of minimum dimensions required by manufacturer. Stagger end laps.

D. Bonding Adhesive: Apply solvent-based bonding adhesive to substrate and underside of roofing membrane at rate required by manufacturer and allow to partially dry before installing roofing membrane. Do not apply bonding adhesive to splice area of roofing membrane.

E. Adhesively fasten roofing membrane securely at terminations, penetrations, and perimeter of roofing.

F. Apply roofing membrane with side laps shingled with slope of roof deck where possible.

G. Seams: Clean seam areas, overlap roofing membrane, and hot-air weld side and end laps of roofing membrane according to manufacturer's written instructions to ensure a watertight seam installation.

   1. Test lap edges with probe to verify seam weld continuity. Apply lap sealant to seal cut edges of roofing membrane.
   2. Verify field strength of seams a minimum of twice daily and repair seam sample areas.
   3. Repair tears, voids, and lapped seams in roofing membrane that does not meet requirements.

H. Spread sealant or mastic bed over deck drain flange at deck drains and securely seal roofing membrane in place with clamping ring.

3.6 BASE FLASHING INSTALLATION

A. Install sheet flashings and preformed flashing accessories and adhere to substrates according to membrane roofing system manufacturer's written instructions.

B. Apply solvent-based bonding adhesive to substrate and underside of sheet flashing at required rate and allow to partially dry. Do not apply bonding adhesive to seam area of flashing.

C. Flash penetrations and field-formed inside and outside corners with sheet flashing.

D. Clean seam areas and overlap and firmly roll sheet flashings into the adhesive. Weld side and end laps to ensure a watertight seam installation.

E. Terminate and seal top of sheet flashings and mechanically anchor to substrate through termination bars.

3.7 WALKWAY INSTALLATION

A. Flexible Walkways: Install walkway products in locations indicated. Heat weld to substrate or adhere walkway products to substrate with compatible adhesive according to roofing system manufacturer's written instructions.

3.8 FIELD QUALITY CONTROL

A. Final Roof Inspection: Arrange for roofing system manufacturer's technical personnel to inspect roofing installation on completion and submit report to Architect.
   1. Notify Architect or Owner 48 hours in advance of date and time of inspection.

B. Repair or remove and replace components of membrane roofing system where test results or inspections indicate that they do not comply with specified requirements.

C. Additional testing and inspecting, at Contractor's expense, will be performed to determine compliance of replaced or additional work with specified requirements.

3.9 PROTECTING AND CLEANING

A. Protect membrane roofing system from damage and wear during remainder of construction period. When remaining construction will not affect or endanger roofing, inspect roofing for deterioration and damage, describing its nature and extent in a written report, with copies to Architect and Owner.

B. Correct deficiencies in or remove membrane roofing system that does not comply with requirements, repair substrates, and repair or reinstall membrane roofing system to a condition free of damage and deterioration at time of Substantial Completion and according to warranty requirements.

C. Clean overspray and spillage from adjacent construction using cleaning agents and procedures recommended by manufacturer of affected construction.

END OF SECTION 07540

PART 1 - GENERAL

1.1 RELATED DOCUMENTS

A. Drawings and general provisions of the Contract, including General and Supplementary Conditions and Division 1 Specification Sections, apply to this Section.

1.2 SUMMARY

A. This Section includes the following:
1. Partial roof tear-off.
2. Temporary roofing membrane.
3. Removal of base flashings.
4. Protection of existing roofing system that is not reroofed.

B. Related Sections include the following:
1. Division 1 Section "Summary" for use of the premises and phasing requirements.
2. Division 1 Section "Work Restrictions" for restrictions on use of the premises due to Owner or tenant occupancy.
3. Division 1 Section "Construction Progress Documentation" for photographs taken before reroofing preparation.
4. Division 1 Section "Temporary Facilities and Controls" for temporary construction and environmental-protection measures for reroofing preparation.
5. Division 1 Section "Cutting and Patching" for cutting and patching procedures for reroofing preparation.
6. Division 6 Section "Miscellaneous Carpentry" for wood nailers, cants, curbs, and blocking.
7. Division 7 Section "Thermoplastic Membrane Roofing@ for roofing membrane, base flashings, and roofing accessories.
8. Division 7 Section "Sheet Metal Flashing and Trim" for metal roof penetration flashings, flashings, and counterflashings.
9. Division 15 Section "Plumbing Specialties" for replacement roof drains.
10. Division 15 Sections for HVAC equipment removal and reinstallation.
11. Division 16 Sections for electrical equipment disconnection and reconnection.

1.3 SCOPE OF WORK

A. Furnish labor, equipment and materials as required to complete the demolition work as indicated on the drawings and by provisions of this section, including:
1. Auto Trades Building
   a. Remove and haul away all existing roofing membranes, insulation, penetration flashings, counter flashing and base flashings down to the existing concrete deck.
   b. Remove and haul away all damaged or deteriorated wood nailers and blocking.
   c. Remove and haul away indicated unit skylights and rooftop vents. Provide new framing as detailed for support of new roof membrane.
   d. Remove and save all materials designated for reuse.
   e. The Contractor shall exercise care during the cutting and removal of existing

roofing. Roofing shall only be cut the depth of the felts and asphalt, as electrical conduits may be laid on top of the deck and within the insulation layer.

f. If damaged material is encountered that is scheduled to remain, the Contractor shall immediately notify the Architect and the Owner for directions.

1.4 MATERIALS OWNERSHIP

A. Except for items or materials indicated to be reused, reinstalled, or otherwise indicated to remain Owner's property, demolished materials shall become Contractor's property and shall be removed from Project site.

1.5 DEFINITIONS

A. Roofing Terminology: Refer to ASTM D 1079 and glossary in NRCA's "The NRCA Roofing and Waterproofing Manual" for definition of terms related to roofing work in this Section.

B. Existing Membrane Roofing System: EPDM/PVC/TPO roofing membrane, surfacing, and components and accessories between deck and roofing membrane.

C. Substrate Board: Rigid board or panel products placed over the roof deck that serve as thermal barriers, provide a smooth substrate, or serve as a component of a fire-resistance-rated roofing system.

D. Roof Re-Cover Preparation: Existing roofing membrane that is to remain and be prepared for reuse.

E. Partial Roof Tear-Off: Removal of a portion of existing membrane roofing system from deck or removal of selected components and accessories from existing membrane roofing system.

F. Remove: Detach items from existing construction and legally dispose of them off-site unless indicated to be removed and reinstalled.

G. Existing to Remain: Existing items of construction that are not indicated to be removed.

1.6 SUBMITTALS

A. Product Data: For each type of product indicated.

B. Temporary Roofing: Include Product Data and description of temporary roofing system. If temporary roof will remain in place, submit surface preparation requirements needed to receive permanent roof, and submit a letter from roofing membrane manufacturer stating acceptance of the temporary membrane, and that its inclusion will not adversely affect the roofing system's resistance to fire and wind or its FMG rating.

C. Fastener pull-out test report.

D. Photographs or Videotape: Show existing conditions of adjoining construction and site improvements, including exterior and interior finish surfaces, that might be misconstrued as having been damaged by reroofing operations. Submit before Work begins.

E. Landfill Records: Indicate receipt and acceptance of hazardous wastes, such as asbestos-containing material, by a landfill facility licensed to accept hazardous wastes.

F. Qualification Data: For Installer.

1.7 QUALITY ASSURANCE

A. Installer Qualifications: Installer of new membrane roofing system.

B. Regulatory Requirements: Comply with governing EPA notification regulations before beginning membrane roofing removal. Comply with hauling and disposal regulations of authorities having jurisdiction.

C. Reroofing Conference: Conduct conference at Project site to comply with requirements in Division 1 Section "Project Management and Coordination." Review methods and procedures related to roofing system including, but not limited to, the following:

1. Meet with Owner; Architect; Owner's insurer if applicable; testing and inspecting agency representative; roofing system manufacturer's representative; deck Installer; roofing Installer including project manager, superintendent, and foreman; and installers whose work interfaces with or affects reroofing including installers of roof accessories and roof-mounted equipment.
2. Review methods and procedures related to reroofing preparation, including membrane roofing system manufacturer's written instructions.
3. Review temporary protection requirements for existing roofing system that is to remain, during and after installation.
4. Review roof drainage during each stage of reroofing and review roof drain plugging and plug removal procedures.
5. Review and finalize construction schedule, and verify availability of materials, Installer's personnel, equipment, and facilities needed to make progress and avoid delays.
6. Review existing deck removal procedures and Owner notifications.
7. Review procedures to determine condition and acceptance of existing deck for reuse.
8. Review structural loading limitations of deck during reroofing.
9. Review base flashings, special roofing details, drainage, penetrations, equipment curbs, and condition of other construction that will affect reroofing.
10. Review HVAC shutdown and sealing of air intakes.
11. Review shutdown of fire-suppression, -protection, and -alarm and -detection systems.
12. Review procedures for asbestos removal or unexpected discovery of asbestos-containing materials.
13. Review governing regulations and requirements for insurance and certificates if applicable.
14. Review existing conditions that may require notification of Architect before proceeding.

1.8 PROJECT CONDITIONS

A. Owner will occupy portions of building immediately below reroofing area. Conduct reroofing so Owner's operations will not be disrupted. Provide Owner with not less than 72 hours' notice of activities that may affect Owner's operations.

1. Coordinate work activities daily with Owner so Owner can place protective dust or

water leakage covers over sensitive equipment or furnishings, shut down HVAC and fire-alarm or -detection equipment if needed, and evacuate occupants from below the work area if desired.

2. Before working over structurally impaired areas of deck, notify Owner to evacuate occupants from below the affected area. Verify that occupants below the work area have been evacuated prior to proceeding with work over the impaired deck area.

B. Protect building to be reroofed, adjacent buildings, walkways, site improvements, exterior plantings, and landscaping from damage or soiling from reroofing operations.

C. Maintain access to existing walkways, corridors, and other adjacent occupied or used facilities.

D. Owner assumes no responsibility for condition of areas to be reroofed.

1. Conditions existing at time of inspection for bidding will be maintained by Owner as far as practical.

E. Weather Limitations: Proceed with reroofing preparation only when existing and forecasted weather conditions permit Work to proceed without water entering into existing roofing system or building.

F. Hazardous Materials: It is not expected that hazardous materials such as asbestos-containing materials will be encountered in the Work.

1. Hazardous materials will be removed by Owner before start of the Work. Existing roof will be left no less watertight than before removal.

2. If materials suspected of containing hazardous materials are encountered, do not disturb; immediately notify Architect and Owner. Hazardous materials will be removed by Owner under a separate contract.

1.9 PROTECTION

A. It shall be the Contractor's responsibility to respond immediately to correction of any roof leakage during construction. A four (4) hour time limit shall be given from the time of notification of emergency conditions. In the event of water penetration during rain or a storm, the Contractor shall provide for repair and protection of the building contents and interior. If the Contractor does not respond or cannot be contacted, the Owner will effect repairs or emergency action and the Contractor shall be back charged for all expenses and damages, if any.

1.10 WARRANTY

A. Existing Warranties: Remove, replace, patch, and repair materials and surfaces cut or damaged during reroofing, by methods and with materials so as not to void existing roofing system warranty. Notify warrantor before proceeding.

1. Notify warrantor of existing roofing system on completion of reroofing, and obtain documentation verifying that existing roofing system has been inspected and warranty remains in effect. Submit documentation at Project closeout.

PART 2 - PRODUCTS

2.1 INFILL MATERIALS

A. Use infill materials matching existing membrane roofing system materials, unless otherwise indicated.

2.2 TEMPORARY ROOFING MATERIALS

A. Selection of materials and design of temporary roofing is responsibility of Contractor.

2.3 AUXILIARY REROOFING MATERIALS

A. General: Auxiliary reroofing preparation materials recommended by roofing system manufacturer for intended use and compatible with components of existing and new membrane roofing system.

B. Base Sheet Fasteners: Capped head, factory-coated steel fasteners, listed in FMG's "Approval Guide."

C. Metal Flashing Sheet: Metal flashing sheet is specified in Division 7 Section "Sheet Metal Flashing and Trim."

PART 3- EXECUTION

3.1 PREPARATION

A. Protect existing membrane roofing system that is indicated not to be reroofed.
   1. Loosely lay 1-inch- (25-mm-) minimum thick, molded expanded polystyrene (MEPS) insulation over the roofing membrane in areas indicated. Loosely lay 15/32-inch (12-mm) plywood or OSB panels over MEPS. Extend MEPS past edges of plywood or OSB panels a minimum of 1 inch (25 mm).
   2. Limit traffic and material storage to areas of existing roofing membrane that have been protected.
   3. Maintain temporary protection and leave in place until replacement roofing has been completed.

B. Coordinate with Owner to shut down air intake equipment in the vicinity of the Work. Cover air intake louvers before proceeding with reroofing work that could affect indoor air quality or activate smoke detectors in the ductwork.

C. During removal operations, have sufficient and suitable materials on-site to facilitate rapid installation of temporary protection in the event of unexpected rain.

D. Maintain roof drains in functioning condition to ensure roof drainage at end of each workday. Prevent debris from entering or blocking roof drains and conductors. Use roof-drain plugs specifically designed for this purpose. Remove roof-drain plugs at end of each workday, when no work is taking place, or when rain is forecast.
   1. If roof drains will be temporarily blocked or unserviceable due to roofing system removal or partial installation of new membrane roofing system, provide alternative drainage method to remove water and eliminate ponding. Do not permit water to enter into or under existing membrane roofing system components that are to remain.

E. Verify that rooftop utilities and service piping have been shut off before commencing Work.

3.2 EXISTING ROOFTOP EQUIPMENT

A. Roof top air vents, mechanical units, etc. are to be removed and reset by the Roofing Contractor. All electrical, plumbing and mechanical work shall be performed by a licensed subcontractor only. All damage shall be repaired by the Roofing Contractor. Openings shall be made watertight while equipment is removed during construction.

3.3 ROOF TEAR-OFF

A. General: Notify Owner each day of extent of roof tear-off proposed.

B. Protect and maintain walls, windows, doors, lawns, vegetation, sidewalks, driveways, conduits, pipes, wires, and all other related structures and fixtures in, on, around or adjacent to the project site that are to remain on or adjacent to the property. Use debris chutes, canvas tarps, single ply membranes, plywood, etc. as needed to direct debris removal into disposal dumpsters and as needed to provide protection of adjacent property.

C. All materials, rubbish, and debris removed from the roof each day shall be hauled away that day.

D. Remove aggregate ballast from roofing membrane. Salvage for reuse by the Owner. Haul to designated area.

E. Remove loose aggregate from aggregate-surfaced built-up bituminous roofing with a power broom.

F. Partial Roof Tear-Off: Where indicated, remove existing roofing membrane and immediately check for presence of moisture by visually observing roof insulation that will remain.
   1. With an electrical capacitance moisture-detection meter, spot check roof insulation that will remain.
   2. Remove wet or damp boards and roof insulation. Removal will be paid for by adjusting the Contract Sum according to unit prices included in the Contract Documents.
   3. Remove fasteners from deck.

3.4 DECK PREPARATION

A. Inspect deck after partial tear-off of membrane roofing system.
   1. Verify that concrete substrate is visibly dry and free of moisture. Test for capillary moisture by plastic sheet method according to ASTM D 4263 or by pouring 1 pint (0.5 L) of hot roofing asphalt on deck at start of each day's work and at start of each roof area or plane. Do not proceed with roofing work if moisture condenses under the plastic sheet or if asphalt test sample foams or can be easily and cleanly stripped after cooling.

B. If broken or loose fasteners that secure deck panels to one another or to structure are observed, or if deck appears or feels inadequately attached, immediately notify Architect. Do not proceed with installation until directed by Architect.

C. If deck surface is not suitable for receiving new roofing, or if structural integrity of deck is suspect, immediately notify Architect. Do not proceed with installation until directed by Architect.

3.5 WOOD NAILERS AND BLOCKING

A. Carefully remove and haul away all damaged or deteriorated wood blocking, nailers, cants and curbs. All good wood shall remain.

3.6 EXISTING MATERIALS FOR REUSE

A. Carefully remove and save all materials designated for reuse. Any materials damaged during removal shall be repaired or replaced at no cost to the owner.

3.7 TEMPORARY ROOFING MEMBRANE

A. Install approved temporary roofing membrane over area to be reroofed.

B. Remove temporary roofing membrane before installing new roofing membrane.

3.8 ROOF RE-COVER PREPARATION

A. Remove blisters, ridges, buckles, mechanically attached roofing membrane fastener buttons projecting above the membrane, and other substrate irregularities from existing roofing membrane that inhibit new recover boards or roofing membrane from conforming to substrate.
   1. Broom clean existing substrate.
   2. Verify that existing substrate is dry before proceeding with installation. Spot check substrate with an electrical capacitance moisture-detection meter.
   3. Remove materials that are wet and damp. Removal will be paid for by adjusting the Contract Sum according to unit prices included in the Contract Documents.

3.9 EXISTING BASE FLASHINGS

A. Remove existing base flashings around parapets, curbs, walls, and penetrations.
   1. Clean substrates of contaminants such as asphalt, sheet materials, dirt, and debris.

B. Do not damage metal counterflashings that are to remain. Replace metal counterflashings damaged during removal with counterflashings specified in Division 7 Section "Sheet Metal Flashing and Trim."

C. Inspect parapet sheathing for deterioration and damage. If parapet sheathing has deteriorated, immediately notify Architect.

3.10 FASTENER PULL-OUT TESTING

A. Perform fastener pull-out tests according to SPRI FX-1, and submit test report to Architect before installing new membrane roofing system.
   1. Obtain Architect's approval to proceed with specified fastening pattern. Architect may furnish revised fastening pattern commensurate with pull-out test results.

3.11 DISPOSAL

A. Collect and place demolished materials in containers. Promptly dispose of demolished materials. Do not allow demolished materials to accumulate on-site.
   1. Storage or sale of demolished items or materials on-site will not be permitted.

B. Transport demolished materials off Owner's property and legally dispose of them.

END OF SECTION 07591

PART 1 - GENERAL

1.1 RELATED DOCUMENTS

A. Drawings and general provisions of the Contract, including General and Supplementary Conditions and Division 1 Specification Sections, apply to this Section.

1.2 SUMMARY

A. This Section includes the following sheet metal flashing and trim:
1. Manufactured reglets.
2. Formed roof drainage system.
3. Formed low-slope roof flashing and trim.
4. Formed wall flashing and trim.
5. Formed equipment support flashing.

B. The work of this Section 07620 - Sheet Metal Flashing and Trim shall be provided and installed by Section 07540 – Thermoplastic Membrane Roofing.

C. Related Sections include the following:
1. Division 6 Section "Miscellaneous Carpentry" for wood nailers, curbs, and blocking.
2. Division 7 Section "Thermoplastic Membrane Roofing@ for installing sheet metal flashing and trim integral with roofing membrane.

1.3 PERFORMANCE REQUIREMENTS

A. General: Install sheet metal flashing and trim to withstand wind loads, structural movement, thermally induced movement, and exposure to weather without failing, rattling, leaking, and fastener disengagement.

B. Fabricate and install roof edge flashing and copings capable of resisting the following forces according to recommendations in FMG Loss Prevention Data Sheet 1-49:
1. Wind Zone 1: For velocity pressures of 21 to 30 lbf/sq. ft. (1.00 to 1.44 kPa): 60-lbf/sq. ft. (2.87-kPa) perimeter uplift force, 90-lbf/sq. ft. (4.31-kPa) corner uplift force, and 30-lbf/sq. ft. (1.44-kPa) outward force.

C. Thermal Movements: Provide sheet metal flashing and trim that allow for thermal movements resulting from the following maximum change (range) in ambient and surface temperatures by preventing buckling, opening of joints, hole elongation, overstressing of components, failure of joint sealants, failure of connections, and other detrimental effects. Provide clips that resist rotation and avoid shear stress as a result of sheet metal and trim thermal movements. Base engineering calculation on surface temperatures of materials due to both solar heat gain and nighttime-sky heat loss.
1. Temperature Change (Range): 120 deg F (67 deg C), ambient; 180 deg F (100 deg C), material surfaces.

D. Water Infiltration: Provide sheet metal flashing and trim that do not allow water infiltration to building interior.

1.4 SUBMITTALS

A. Product Data: For each type of product indicated. Include construction details, material descriptions, dimensions of individual components and profiles, and finishes.

B. Shop Drawings: Show layouts of sheet metal flashing and trim, including plans and elevations. Distinguish between shop- and field-assembled work. Include the following:
   1. Identify material, thickness, weight, and finish for each item and location in Project.
   2. Details for forming sheet metal flashing and trim, including profiles, shapes, seams, and dimensions.
   3. Details for fastening, joining, supporting, and anchoring sheet metal flashing and trim, including fasteners, clips, cleats, and attachments to adjoining work.
   4. Details of expansion-joint covers, including showing direction of expansion and contraction.

C. Samples for Selection: For each type of sheet metal flashing and trim indicated with factory-applied color finishes.
   1. Include similar Samples of trim and accessories involving color selection.

1.5 QUALITY ASSURANCE

A. Sheet Metal Flashing and Trim Standard: Comply with SMACNA's "Architectural Sheet Metal Manual." Conform to dimensions and profiles shown unless more stringent requirements are indicated.

B. Preinstallation Conference: Conduct conference at Project site to comply with requirements in Division 1 Section "Project Management and Coordination."
   1. Meet with Owner, Architect, Owner's insurer if applicable, Installer, and installers whose work interfaces with or affects sheet metal flashing and trim including installers of roofing materials, roof accessories, unit skylights, and roof-mounted equipment.
   2. Review methods and procedures related to sheet metal flashing and trim.
   3. Examine substrate conditions for compliance with requirements, including flatness and attachment to structural members.
   4. Document proceedings, including corrective measures and actions required, and furnish copy of record to each participant.

1.6 DELIVERY, STORAGE, AND HANDLING

A. Deliver sheet metal flashing materials and fabrications undamaged. Protect sheet metal flashing and trim materials and fabrications during transportation and handling.

B. Unload, store, and install sheet metal flashing materials and fabrications in a manner to prevent bending, warping, twisting, and surface damage.

C. Stack materials on platforms or pallets, covered with suitable weathertight and ventilated covering. Do not store sheet metal flashing and trim materials in contact with other materials that might cause staining, denting, or other surface damage.

1.7 COORDINATION

A. Coordinate installation of sheet metal flashing and trim with interfacing and adjoining construction to provide a leakproof, secure, and noncorrosive installation.

1.8 WARRANTY

A. Special Warranty on Finishes: Manufacturer's standard form in which manufacturer agrees to repair finish or replace metal that show evidence of deterioration of factory-applied finishes within specified warranty period.
   1. Fluoropolymer Finish: Deterioration includes, but is not limited to, the following:
      a. Color fading more than 5 Hunter units when tested according to ASTM D 2244.
      b. Chalking in excess of a No. 8 rating when tested according to ASTM D 4214.
      c. Cracking, checking, peeling, or failure of paint to adhere to bare metal.
   2. Finish Warranty Period: 20 years from date of Substantial Completion.

PART 2 - PRODUCTS

2.1 MANUFACTURERS

A. In other Part 2 articles where titles below introduce lists, the following requirements apply to product selection:
   1. Available Products: Subject to compliance with requirements, products that may be incorporated into the Work include, but are not limited to, products specified.
   2. Available Manufacturers: Subject to compliance with requirements, manufacturers offering products that may be incorporated into the Work include, but are not limited to, manufacturers specified.

2.2 SHEET METALS

A. Zinc-Coated (Galvanized) Steel Sheet: ASTM A 653/A 653M, G90 (Z275) coating designation; structural quality, mill phosphatized for field painting.

B. Prepainted, Metallic-Coated Steel Sheet: Steel sheet metallic coated by the hot-dip process and prepainted by the coil-coating process to comply with ASTM A 755/A 755M.
   1. Zinc-Coated (Galvanized) Steel Sheet: ASTM A 653/A 653M, G90 (Z275) coating designation; structural quality.
   2. Exposed Finishes: Apply the following coil coating:
      a. High-Performance Organic Finish: Prepare, pretreat, and apply coating to exposed metal surfaces to comply with coating and resin manufacturers' written instructions.
         1) Fluoropolymer 3-Coat System: Manufacturer's standard 3-coat, thermocured system consisting of specially formulated inhibitive primer, fluoropolymer color coat, and clear fluoropolymer topcoat, with both color coat and clear topcoat containing not less than 70 percent polyvinylidene fluoride resin by weight, with a minimum total dry film thickness of 1.5 mil (0.038 mm); complying with physical properties and coating performance requirements of AAMA 2605, except as modified below:
            a) Humidity Resistance: 2000 hours.
            b) Salt-Spray Resistance: 2000 hours.
         2) Color: As selected by Architect from manufacturer's full range including deep tone colors.

C. Lead Sheet: ASTM B 749, Type L51121, copper-bearing lead sheet.

2.3 UNDERLAYMENT MATERIALS

A. Polyethylene Sheet: 6-mil- (0.15-mm-) thick polyethylene sheet complying with ASTM D 4397.

B. Slip Sheet: Rosin-sized paper, minimum 3 lb/100 sq. ft. (0.16 kg/sq. m).

2.4 MISCELLANEOUS MATERIALS

A. General: Provide materials and types of fasteners, solder, welding rods, protective coatings, separators, sealants, and other miscellaneous items as required for complete sheet metal flashing and trim installation.

B. Fasteners: Wood screws, annular threaded nails, self-tapping screws, self-locking rivets and bolts, and other suitable fasteners designed to withstand design loads.
   1. Exposed Fasteners: Heads matching color of sheet metal by means of plastic caps or factory-applied coating.
   2. Fasteners for Flashing and Trim: Blind fasteners or self-drilling screws, gasketed, with hex washer head.
   3. Blind Fasteners: High-strength aluminum or stainless-steel rivets.
   4. Spikes and Ferrules: Same material as gutter; with spike with ferrule matching internal gutter width.

C. Solder for Lead: ASTM B 32, Grade Sn50, 50 percent tin and 50 percent lead.

D. Burning Rod for Lead: Same composition as lead sheet.

E. Sealing Tape: Pressure-sensitive, 100 percent solids, polyisobutylene compound sealing tape with release-paper backing. Provide permanently elastic, nonsag, nontoxic, nonstaining tape.

F. Elastomeric Sealant: ASTM C 920, elastomeric silicone polymer sealant; of type, grade, class, and use classifications required to seal joints in sheet metal flashing and trim and remain watertight.

G. Butyl Sealant: ASTM C 1311, single-component, solvent-release butyl rubber sealant, polyisobutylene plasticized, heavy bodied for hooked-type expansion joints with limited movement.

H. Bituminous Coating: Cold-applied asphalt mastic, SSPC-Paint 12, compounded for 15-mil (0.4-mm) dry film thickness per coat. Provide inert-type noncorrosive compound free of asbestos fibers, sulfur components, and other deleterious impurities.

2.5 MANUFACTURED SHEET METAL FLASHING AND TRIM

A. Reglets: Units of type, material, and profile indicated, formed to provide secure interlocking of separate reglet and counterflashing pieces, and compatible with flashing indicated with factory- mitered and -welded corners and junctions.
   1. Available Manufacturers:
      a. Fry Reglet Corporation.
   2. Material: Galvanized steel, 0.0217 inch (0.55 mm) thick.

3. Surface-Mounted Type: Provide with slotted holes for fastening to substrate, with neoprene or other suitable weatherproofing washers, and with channel for sealant at top edge.
4. Flexible Flashing Retainer: Provide resilient plastic or rubber accessory to secure flexible flashing in reglet where clearance does not permit use of standard metal counterflashing or where Drawings show reglet without metal counterflashing.
5. Counterflashing Wind-Restraint Clips: Provide clips to be installed before counterflashing to prevent wind uplift of counterflashing lower edge.

2.6 FABRICATION, GENERAL

A. General: Custom fabricate sheet metal flashing and trim to comply with recommendations in SMACNA's "Architectural Sheet Metal Manual" that apply to design, dimensions, metal, and other characteristics of item indicated. Shop fabricate items where practicable. Obtain field measurements for accurate fit before shop fabrication.

B. Fabricate sheet metal flashing and trim in thickness or weight needed to comply with performance requirements, but not less than that specified for each application and metal.

C. Fabricate sheet metal flashing and trim without excessive oil canning, buckling, and tool marks and true to line and levels indicated, with exposed edges folded back to form hems.

D. Sealed Joints: Form nonexpansion but movable joints in metal to accommodate elastomeric sealant to comply with SMACNA recommendations.

E. Seams: Comply with SMACNA AArchitectural Sheet Metal Manual@, (Sixth Edition, September 2003) Figure no. 3-2 and 3-3 as applicable to specific installations.
1. Standing Seams: Provide double lock standing seams (detail no. 25, figure no. 3-3), with finish not less than 1-1/4" high.

F. Expansion Provisions: Where lapped or bayonet-type expansion provisions in the Work cannot be used, form expansion joints of intermeshing hooked flanges, not less than 1 inch (25 mm) deep, filled with elastomeric sealant concealed within joints.

G. Conceal fasteners and expansion provisions where possible on exposed-to-view sheet metal flashing and trim, unless otherwise indicated.

H. Fabricate cleats and attachment devices from same material as accessory being anchored or from compatible, noncorrosive metal.
1. Thickness: As recommended by SMACNA's "Architectural Sheet Metal Manual" for application but not less than thickness of metal being secured.

2.7 LOW-SLOPE ROOF SHEET METAL FABRICATIONS

A. Copings: Fabricate in minimum 96-inch- (2400-mm-) long, but not exceeding 10-foot- (3-m-) long, sections. Fabricate joint plates of same thickness as copings. Furnish with continuous cleats to support edge of external leg and drill elongated holes for fasteners on interior leg. Miter corners, seal, and solder or weld watertight.
1. Joint Style: Standing seams.
2. Fabricate copings from the following material:
   a. Prepainted, Metallic-Coated Steel: 0.0396 inch (1.0 mm) thick.
   b. Galvanized Steel (General Classroom Building Only): 0.0396 inch (1.0 mm) thick.

B. Roof and Roof to Wall Transition Expansion-Joint Cover: Fabricate from the following material:
   1. Prepainted, Metallic-Coated Steel: 0.0336 inch (0.85 mm) thick.

C. Base Flashing: Fabricate from the following material:
   1. Galvanized Steel: 0.0276 inch (0.7 mm) thick.

D. Counterflashing: Fabricate from the following material:
   1. Galvanized Steel: 0.0217 inch (0.55 mm) thick.

E. Flashing Receivers: Fabricate from the following material:
   1. Galvanized Steel: 0.0217 inch (0.55 mm) thick.

F. Roof-Penetration Flashing: Fabricate from the following material:
   1. Lead: 2.5 lb/sq. ft. (1.6 mm thick), hard tempered.

G. Roof-Drain Flashing: Fabricate from the following material:
   1. Lead: 4.0 lb/sq. ft. (1.6 mm thick), hard tempered.

2.8 MISCELLANEOUS SHEET METAL FABRICATIONS

A. Equipment Support Flashing: Fabricate from the following material:
   1. Galvanized Steel: 0.0276 inch (0.7 mm) thick.

2.9 FINISHES

A. Comply with NAAMM's "Metal Finishes Manual for Architectural and Metal Products" for recommendations for applying and designating finishes.

B. Protect mechanical and painted finishes on exposed surfaces from damage by applying a strippable, temporary protective covering before shipping.

C. Appearance of Finished Work: Variations in appearance of abutting or adjacent pieces are acceptable if they are within one-half of the range of approved Samples. Noticeable variations in the same piece are not acceptable. Variations in appearance of other components are acceptable if they are within the range of approved Samples and are assembled or installed to minimize contrast.

PART 3 - EXECUTION

3.1 EXAMINATION

A. Examine substrates, areas, and conditions, with Installer present, to verify actual locations, dimensions and other conditions affecting performance of work.
   1. Verify that substrate is sound, dry, smooth, clean, sloped for drainage, and securely anchored.
   2. Proceed with installation only after unsatisfactory conditions have been corrected.

3.2 INSTALLATION, GENERAL

A. General: Anchor sheet metal flashing and trim and other components of the Work securely in

place, with provisions for thermal and structural movement. Use fasteners, solder, welding rods, protective coatings, separators, sealants, and other miscellaneous items as required to complete sheet metal flashing and trim system.

1. Torch cutting of sheet metal flashing and trim is not permitted.

B. Metal Protection: Where dissimilar metals will contact each other or corrosive substrates, protect against galvanic action by painting contact surfaces with bituminous coating or by other permanent separation as recommended by fabricator or manufacturers of dissimilar metals.

1. Coat side of sheet metal flashing and trim with bituminous coating where flashing and trim will contact wood, ferrous metal, or cementitious construction.
2. Underlayment: Where installing metal flashing directly on cementitious or wood substrates, install a course of felt underlayment and cover with a slip sheet or install a course of polyethylene underlayment.
3. Bed flanges in thick coat of asphalt roofing cement where required for waterproof performance.

C. Install exposed sheet metal flashing and trim without excessive oil canning, buckling, and tool marks.

D. Install sheet metal flashing and trim true to line and levels indicated. Provide uniform, neat seams with minimum exposure of solder, welds, and elastomeric sealant.

E. Install sheet metal flashing and trim to fit substrates and to result in watertight performance. Verify shapes and dimensions of surfaces to be covered before fabricating sheet metal.

1. Space cleats not more than 12 inches (300 mm) apart. Anchor each cleat with two fasteners. Bend tabs over fasteners.

F. Expansion Provisions: Provide for thermal expansion of exposed flashing and trim. Space movement joints at a maximum of 10 feet (3 m) with no joints allowed within 24 inches (600 mm) of corner or intersection. Where lapped or bayonet-type expansion provisions cannot be used or would not be sufficiently watertight, form expansion joints of intermeshing hooked flanges, not less than 1 inch (25 mm) deep, filled with elastomeric sealant concealed within joints.

G. Fasteners: Use fasteners of sizes that will penetrate substrate not less than 1-1/4 inches (32 mm) for nails and not less than 3/4 inch (19 mm) for wood screws.

1. Galvanized or Prepainted, Metallic-Coated Steel: Use stainless-steel fasteners.

H. Seal joints with elastomeric sealant as required for watertight construction.

1. Where sealant-filled joints are used, embed hooked flanges of joint members not less than 1 inch (25 mm) into sealant. Form joints to completely conceal sealant. When ambient temperature at time of installation is moderate, between 40 and 70 deg F (4 and 21 deg C), set joint members for 50 percent movement either way. Adjust setting proportionately for installation at higher ambient temperatures. Do not install sealant-type joints at temperatures below 40 deg F (4 deg C).
2. Prepare joints and apply sealants to comply with requirements in Division 7 Section "Joint Sealants."

I. Soldered Joints: Clean surfaces to be soldered, removing oils and foreign matter. Pretin edges of sheets to be soldered to a width of 1-1/2 inches (38 mm) except where pretinned surface would show in finished Work.

1. Do not solder prepainted, metallic-coated steel sheet.

2. Pretinning is not required for lead.
3. Where surfaces to be soldered are lead coated, do not tin edges, but wire brush lead coating before soldering.
4. Do not use open-flame torches for soldering. Heat surfaces to receive solder and flow solder into joints. Fill joints completely. Completely remove flux and spatter from exposed surfaces.

3.3 ROOF DRAINAGE SYSTEM INSTALLATION

A. General: Install sheet metal roof drainage items to produce complete roof drainage system according to SMACNA recommendations and as indicated. Coordinate installation of roof perimeter flashing with installation of roof drainage system.

3.4 ROOF FLASHING INSTALLATION

A. General: Install sheet metal roof flashing and trim to comply with performance requirements, sheet metal manufacturer's written installation instructions, and SMACNA's "Architectural Sheet Metal Manual." Provide concealed fasteners where possible, set units true to line, and level as indicated. Install work with laps, joints, and seams that will be permanently watertight.

B. Roof Edge Flashing: Anchor to resist uplift and outward forces according to recommendations in FMG Loss Prevention Data Sheet 1-49 for specified wind zone and as indicated.
1. Interlock bottom edge of roof edge flashing with continuous cleats anchored to substrate at 16-inch (400-mm) centers.

C. Copings: Anchor to resist uplift and outward forces according to recommendations in FMG Loss Prevention Data Sheet 1-49 for specified wind zone and as indicated.
1. Interlock exterior bottom edge of coping with continuous cleats anchored to substrate at 16-inch (400-mm) centers.
2. Anchor interior leg of coping with screw fasteners and washers at 18-inch (450-mm) centers.

D. Pipe or Post Counterflashing: Install counterflashing umbrella with close-fitting collar with top edge flared for elastomeric sealant, extending a minimum of 4 inches (100 mm) over base flashing. Install stainless-steel draw band and tighten.

E. Counterflashing: Coordinate installation of counterflashing with installation of base flashing. Insert counterflashing in reglets or receivers and fit tightly to base flashing. Extend counterflashing 4 inches (100 mm) over base flashing. Lap counterflashing joints a minimum of 4 inches (100 mm) and bed with elastomeric sealant.
1. Secure in a waterproof manner by means of snap-in installation and sealant.

F. Roof-Penetration Flashing: Coordinate installation of roof-penetration flashing with installation of roofing and other items penetrating roof. Install flashing as follows:
1. Seal with elastomeric sealant and clamp flashing to pipes penetrating roof except for lead flashing on vent piping.

3.5 MISCELLANEOUS FLASHING INSTALLATION

A. Equipment Support Flashing: Coordinate installation of equipment support flashing with installation of roofing and equipment. Weld or seal flashing with elastomeric sealant to

equipment support member.

3.6 CLEANING AND PROTECTION

A. Clean exposed metal surfaces of substances that interfere with uniform oxidation and weathering.

B. Clean and neutralize flux materials. Clean off excess solder and sealants.

C. Remove temporary protective coverings and strippable films as sheet metal flashing and trim are installed. On completion of installation, clean finished surfaces, including removing unused fasteners, metal filings, pop rivet stems, and pieces of flashing. Maintain in a clean condition during construction.

D. Replace sheet metal flashing and trim that have been damaged or that have deteriorated beyond successful repair by finish touchup or similar minor repair procedures.

END OF SECTION 07620

SECTION 07720 - ROOF ACCESSORIES October 3, 2006

PART 1 - GENERAL

1.1 RELATED DOCUMENTS

A. Drawings and general provisions of the Contract, including General and Supplementary Conditions and Division 1 Specification Sections, apply to this Section.

1.2 SUMMARY

A. This Section includes the following:
   1. Roof hatches.

B. Related Sections: The following Sections contain requirements that relate to this Section:
   1. Division 7 Section for roofing types and roofing accessories included as part of roofing Work.
   2. Division 7 Section "Flashing and Sheet Metal" for metal flashing.

1.3 SUBMITTALS

A. General: Submit the following according to Conditions of Contract and Division 1 Specification Sections.

B. Product data for each type of product specified. Submit manufacturer's detailed technical product data, installation instructions and recommendations, including details of construction relative to materials, dimensions of individual components, profiles, and finishes.

C. Shop drawings showing fabrication and installation of each roof accessory specified including fully dimensioned plans, elevations, sections, details of components, and attachments to other units of Work. Also show layout, anchorage details, rough-in requirements, and conditions on the roof or for other accessories.

D. Coordination Drawings: Submit coordination drawings for items interfacing with or supporting mechanical or electrical equipment, ductwork, piping, or conduit. Indicate dimensions and locations of items provided under this Section, together with relationships and methods of attachment to adjacent construction and to mechanical or electrical items.

PART 2 - PRODUCTS

2.1 MATERIALS, GENERAL

A. Structural-Quality Galvanized Steel Sheet: ASTM A 446 with G90 coating complying with ASTM A 525, Grade C, or to suit manufacturer's standards.

B. Galvalume-Coated Steel Sheet: ASTM A 792 with class AZ-50 coating, Grade 40, or to suit manufacturer's standards.

C. Insulation: Manufacturer's standard rigid or semirigid glass-fiber board of thickness indicated.

D. Wood Nailers: Softwood lumber, pressure treated with water-borne preservatives for

above-ground use, complying with AWPA C2; not less than 1-1/2 inch thick.

E. Fasteners: Same metal as metals being fastened, or nonmagnetic stainless steel or other noncorrosive metal as recommended by manufacturer. Match finish of exposed fasteners with finish of material being fastened.
   1. Where removal of exterior exposed fasteners affords access to building, provide nonremovable fastener heads.

F. Gaskets: Manufacturer's standard tubular or fingered design of neoprene or polyvinyl chloride, or block design of sponge neoprene.

G. Bituminous Coating: SSPC-Paint 12, solvent-type bituminous mastic, nominally free of sulfur and containing no asbestos fibers, compounded for 15-mil dry film thickness per coating.

H. Mastic Sealant: Polyisobutylene; nonhardening, nonskinning, nondrying, nonmigrating sealant.

I. Elastomeric Sealant: Generic type recommended by unit manufacturer that is compatible with joint surfaces; ASTM C 920, Type S, Grade NS, Class 25, and Uses NT, G, and, A.

2.2 FINISHES

A. General: Comply with NAAMM "Metal Finishes Manual" for recommendations on applying and designating finishes.

B. Baked Enamel Finish: AA-C12C42R1x (Chemical Finish: cleaned with inhibited chemicals; Chemical Finish: chemical conversion coating, acid chromate-fluoride-phosphate pretreatment; Organic Coating: as specified below). Apply baked enamel complying with paint manufacturer's specifications for cleaning, conversion coating, and painting.

PART 3 - EXECUTION

3.1 INSTALLATION

A. General: Comply with manufacturer's instructions and recommendations. Coordinate with installation of roof deck and other substrates to receive accessory units, vapor barriers, roof insulation, roofing and flashing, as required, to ensure that each element of the Work performs properly and that combined elements are waterproof and weathertight. Anchor units securely to supporting structural substrates, adequate to withstand lateral and thermal stresses, as well as inward and outward loading pressures.
   1. Except as otherwise indicated, install roof accessory items according to construction details of NRCA "Roofing and Waterproofing Manual."

B. Isolation: Where metal surfaces of units are to be installed in contact with incompatible metal or corrosive substrates, including wood, apply bituminous coating on concealed metal surfaces, or provide other permanent separation.

C. Flange Seals: Unless otherwise indicated, set flanges of accessory units in a thick bed of roofing cement to form a seal.

D. Cap Flashing: Where cap flashing is required as component of accessory, install to provide adequate waterproof overlap with roofing or roof flashing (as counterflashing). Seal with thick bead of mastic sealant, except where overlap is indicated to be left open for ventilation.

E. Operational Units: Test operate units with operable components. Clean and lubricate joints and hardware. Adjust for proper operation.

3.2 CLEANING AND PROTECTION

A. Clean exposed metal and plastic surfaces according to manufacturer's instructions. Touch up damaged metal coatings.

END OF SECTION 07720

DIVISION 8 - DOORS AND WINDOWS

Section 08620 Unit Skylights

SECTION 08620 - UNIT SKYLIGHTS October 3, 2006

PART 1 - GENERAL

1.1 RELATED DOCUMENTS

A. Drawings and general provisions of the Contract, including General and Supplementary Conditions and Division 1 Specification Sections, apply to this Section.

1.2 SUMMARY

A. This Section includes factory-assembled unit skylights for installation in flat roof areas.
   1. Type: Mounted on site-built curb.
   2. Glazing: Acrylic.

B. Furnish labor, equipment, and materials as required to replace damaged skylights as indicated on drawings and by provisions of this Section, including:
   1. Replace broken domes.
   2. Repair or replace broken, damaged or improperly functioning frames.
   3. Replace indicated skylight units in their entirety with new unit skylights.

C. Related Sections include the following:
   1. Division 6 Section "Miscellaneous Carpentry" for wood framing and blocking at unit skylights.
   2. Division 7 Section "Sheet Metal Flashing and Trim" for flashing at unit skylights.

1.3 PERFORMANCE REQUIREMENTS

A. Structural Loads: Provide unit skylights, including glazing and anchorage, capable of withstanding the effects of the following design loads:
   1. Snow Load: As indicated.
   2. Negative Pressure (Uplift) Load: As indicated.

1.4 SUBMITTALS

A. Product Data: For unit skylights. Include construction details, material descriptions, dimensions of individual components and profiles, and finishes.

B. Shop Drawings: For unit skylights. Include plans, elevations, sections, details, and attachments to other Work.

C. Samples for Selection: For units with factory-applied color finishes.

1.5 GENERAL PROJECT AND APPLICATION REQUIREMENTS

A. Contractor shall be responsible for the dismantling, removal, and replacement of items which are required for proper completion of the work of this section.

B. Contractor shall carefully examine job site and all conditions affecting work of this Section prior to bidding. Contractors bid shall reflect all anticipated conditions, materials, labor, etc. needed to complete the work of this section, including conditions not specifically outlined in the Project Documents.

1.6 QUALITY ASSURANCE

A. Fire-Test Response Characteristics of Plastic Glazing: Provide plastic glazing sheets identical to those tested for fire-exposure behavior per test method indicated below by a testing and inspecting agency acceptable to authorities having jurisdiction. Identify materials with appropriate markings of applicable testing and inspecting agency.
   1. Self-Ignition Temperature: 650 deg F (343 deg C) or greater for plastic sheets in thickness indicated when tested per ASTM D 1929.
   2. Smoke Production Characteristics: Comply with either requirement below:
      a. Smoke-Developed Index: 450 or less when tested per ASTM E 84 on plastic sheets in manner indicated for use.
      b. Smoke Density: 75 or less when tested per ASTM D 2843 on plastic sheets in thickness indicated for use.
   3. Relative-Burning Characteristics: Tested per ASTM D 635.
      a. Acrylic Glazing: Class CC2, burning rate of 2.5 inches (64 mm) per minute or less for nominal thickness of 0.060 inch (1.5 mm) or thickness indicated for use.

1.7 WARRANTY

A. Special Warranty: Manufacturer's standard form in which manufacturer agrees to repair or replace components of unit skylights that fail in materials or workmanship within specified warranty period. Failures include, but are not limited to, the following:
   1. Uncontrolled water leakage.
   2. Deterioration of metals, metal finishes, and other materials beyond normal weathering.
   3. Yellowing of acrylic glazing.

B. Warranty Period: Five years from Substantial Completion.

PART 2 - PRODUCTS

2.1 MANUFACTURERS

A. Available Products: Subject to compliance with requirements, products that may be incorporated into the Work include, but are not limited to, the following:
   1. Aladdin Industries, Inc.
   2. Dur-Red Products.
   3. Naturalite Skylight Systems.
   4. Plasteco, Inc.
   5. Plasticrafts/Faulkner Plastics, Cadillac Plastic Co.
   6. Wasco Products, Inc.

2.2 UNIT SKYLIGHTS

A. General: Factory-assembled units that include glazing, extruded-aluminum glazing retainers, gaskets, and inner frames and that are capable of withstanding design loads indicated.

B. Site-Built Curb: As specified in Division 6 Section "Miscellaneous Carpentry."

C. Unit Shape and Size: As indicated.

D. Acrylic Glazing: ASTM D 4802, thermoformable, monolithic sheet, Category as standard with manufacturer, Type UVA (formulated with UV absorber), Finish 1 (smooth or polished).
   1. Double-Glazing Profile: Dome, 25 percent rise.
      a. Outer Glazing Color: Colorless, transparent.
      b. Inner Glazing Color: White, translucent.

E. Glazing Gaskets: EPDM, neoprene, partially vulcanized butyl tape, or liquid-applied elastomeric sealant.

F. Aluminum Components:
   1. Sheets: ASTM B 209 (ASTM B 209M), alloy and temper to suit forming operations and finish requirements but with not less than the strength and durability of alclad alloy 3005-H25.
   2. Extruded Shapes: ASTM B 221 (ASTM B 221M), alloy and temper to suit structural and finish requirements but with not less than the strength and durability of
   3. High-Performance Organic Coating: Fluoropolymer, two-coat thermocured system with topcoat containing not less than 70 percent polyvinylidene resin by weight; complying with AAMA 2604.
      a. Color and Gloss: As selected by Architect from manufacturer's full range.

G. Fasteners: Same metal as metal being fastened, nonmagnetic stainless steel, or other noncorrosive metal as recommended by manufacturer. Finish exposed fasteners to match material being fastened.
   1. Where removal of exterior exposed fasteners might allow access to building, provide nonremovable fastener heads.

H. Condensation Control: Fabricate unit skylights with integral internal gutters and nonclogging weeps to collect and drain condensation to the exterior.

I. Thermal Break: Fabricate unit skylights with thermal barrier separating interior metal framing from materials exposed to outside temperature.

2.3 INSTALLATION MATERIALS

A. Bituminous Coating: SSPC-Paint 12, solvent-type, bituminous mastic, nominally free of sulfur and containing no asbestos fibers, formulated for 15-mil (0.4-mm) dry film thickness per coating.

B. Mastic Sealant: Polyisobutylene; nonhardening, nonskinning, nondrying, nonmigrating sealant.

C. Elastomeric Sealant: ASTM C 920; Type S; Grade NS; Class 25; and Uses NT, G, A, and (as applicable to joint substrates indicated) O; recommended by unit skylight manufacturer and compatible with joint surfaces.

PART 3 - EXECUTION

3.1 INSTALLATION

A. Coordinate unit skylight installation with installation of substrates, vapor retarders, roof insulation, roofing, and flashing as required to ensure that each element of the Work performs

properly and that combined elements are waterproof and weathertight.

1. Unless otherwise indicated, install unit skylights according to construction details of NRCA's "The NRCA Roofing and Waterproofing Manual."

B. Where metal surfaces of units will contact incompatible metal or corrosive substrates, including wood, apply bituminous coating on concealed metal surfaces, or provide other permanent separation recommended in writing by unit skylight manufacturer.

C. Anchor unit skylights securely to supporting substrates.

D. Set unit skylight flanges in thick bed of roofing cement to form a seal, unless otherwise indicated.

E. Where cap flashing is indicated, install to produce waterproof overlap with roofing or roof flashing. Seal with thick bead of mastic sealant except where overlap is indicated to be left open for ventilation.

3.2 REPLACE BROKEN DOMES

A. Carefully inspect all skylight domes. Replace all cracked or broken plastic skylight domes with new white acrylic plastic domes.

B. Existing skylights that are single domed and not cracked or broken shall remain.

3.3 CLEAN, REPAIR OR REPLACE BROKEN FRAMES

A. Carefully inspect all skylight frames on broken skylights. Clean, repair, re-weld or replace broken, damaged or improperly functioning metal frames with new frames of similar style and material.

3.4 CLEANING

A. Clean exposed surfaces according to manufacturer's written instructions. Touch up damaged metal coatings.

END OF SECTION 08620

DIVISION 9 - FINISHES

Section 09900 Painting

PART 1 - GENERAL

1.1 SUMMARY

A. Section includes painting work, interior and exterior. Work Includes, but is not limited to painting the following:
   1. Exterior miscellaneous metal items including existing p roof hatches, stairs, ladders, and railings exposed on the roof surface.
   2. Exterior metal mechanical units including but not limited to HVAC equipment, rooftop fans, boiler flues.
   3. Work includes field painting of exposed bare and covered pipes and ducts (including color coding), and of hangers, exposed steel and iron work, and primed metal surfaces of mechanical and electrical equipment, except as otherwise indicated. Field painting of roof mounted mechanical units is part of this section.

B. "Paint" as used herein means all coating systems materials, including primers, emulsions, enamels, stains, sealers and fillers, and other applied materials whether used as prime, intermediate or finish coats.

C. Surfaces to be Painted: Except where natural finish of material is specifically noted as a surface not to be painted, paint all exposed surfaces whether or not colors are designated in "schedules". Where items or surfaces are not specifically mentioned, paint the same as similar adjacent materials or areas. If color or finish is not designated, Architect will select these from standard or custom colors and finishes. Multiple colors may be selected by the Architect for any type of paint system.
   1. Surface preparation, priming and coats of paint specified are in addition to shop-priming and surface treatment specified under other sections of work.
   2. If it can be seen, paint it.

D. Following categories of work are not included as part of field-applied finish work.
   1. Pre-Finished Items: Unless otherwise indicated, do not include painting when factory-finishing is specified for such items as (but not limited to) finished mechanical and electrical equipment, including switchgear and distribution cabinets.
   2. Concealed Surfaces: Unless otherwise indicated, painting is not required on surfaces such as generally inaccessible areas, including utility tunnels, pipe spaces and duct shafts.
   3. Finished Metal Surfaces: Unless otherwise indicated, metal surfaces of anodized aluminum, stainless steel, chromium plate, copper, bronze and similar finished materials will not require finish painting.
   4. Operating Parts: Unless otherwise indicated, moving parts of operating units, mechanical and electrical parts, such as valve and damper operators, linkages, sinkages, sensing devices, motor and fan shafts will not require finish painting.
   5. Do not paint over any code-required labels, such as Underwriters' Laboratories and Factory Mutual, or any equipment identification, performance rating, name, or nomenclature plates.

C. Related Sections:
   1. Shop Primers: Unless otherwise specified, shop priming of ferrous metal items is included under various sections for structural steel, metal fabrications, hollow metal work and similar items.

a. Unless otherwise specified, shop priming of fabricated components such as architectural woodwork, wood casework and shop-fabricated or factory-built mechanical and electrical equipment or accessories is included under other sections of these specifications.

D. Related Documents: Drawings and general provisions of Contract, including General and Supplementary Conditions and Division-1 Specification sections, apply to work of this section.

1.2 SUBMITTALS

A. Product Data: Submit manufacturer's technical information including Paint label analysis and application instructions for each material proposed for use.

B. Samples: Prior to beginning work, Architect will furnish color chips for surfaces to be painted. Use representative colors when preparing samples for review. Submit samples for Architect's review of color and texture only. Provide a listing of material and application for each coat of each finish sample.

1. On 12" x 12" hardboard, provide two samples of each color and material, with texture to simulate actual conditions. Resubmit samples as requested by Architect until acceptable sheen, color, and texture is achieved.
2. On actual wall surfaces and other exterior and interior building components, duplicate painted finishes of prepared samples. Provide full-coat finish samples on at least 20 sq. ft. of surface,or as directed, until required sheen, color and texture is obtained; simulate finished lighting conditions for review of in-place work.
   a. Final acceptance of colors will be from samples applied on the job.

1.3 QUALITY ASSURANCE

A. Single Source Responsibility: Provide primers and other undercoat paint produced by same manufacturer as finish coats. Use only thinners approved by paint manufacturer, and use only within recommended limits.

B. Coordination of Work: Review other sections of these specifications in which prime paints are to be provided to ensure compatibility of total coatings system for various substrates. Upon request from other trades, furnish information or characteristics of finish materials provided for use, to ensure compatible prime coats are used.

1.4 DELIVERY AND STORAGE

A. Deliver materials to job site in original, new and unopened packages and containers bearing manufacturer's name and label, and following information:

1. Name or title of material.
2. Fed. Spec. number, if applicable.
3. Manufacturer's stock number and date of manufacture.
4. Manufacturer's name.
5. Contents by volume, for major pigment and vehicle constituents.
6. Thinning instructions.
7. Application instructions.
8. Color name and number.

B. Store materials not in actual use in tightly covered containers. Maintain containers used in storage of paint in a clean condition, free of foreign materials and residue.

1. Protect from freezing where necessary. Keep storage area neat and orderly.

Remove oily rags and waste daily. Take all precautions to ensure that workmen and work areas are adequately protected from fire hazards and health hazards resulting from handling, mixing and application of paints.

1.5 JOB CONDITIONS

A. Apply water-base paints only when temperature of surfaces to be painted and surrounding air temperatures are between 50°F and 90°F, unless otherwise permitted by paint manufacturer's printed instructions.

B. Apply solvent-thinned paints only when temperature of surfaces to be painted and surrounding air temperatures are between 45°F and 95°F, unless otherwise permitted by paint manufacturer's printed instructions.

C. Do not paint in snow, rain, fog or mist, or when relative humidity exceeds 85%, or to damp or wet surfaces, unless otherwise permitted by paint manufacturer's printed instructions.
   1. Painting may be continued during inclement weather if areas and surfaces to be painted are enclosed and heated within temperature limits specified by paint manufacturer during application and drying periods.

D. Determine moisture content of surfaces to be painted by performing appropriate tests using a commercially available moisture meter. Apply paint only when surfaces are within limits specified by the paint manufacturer=s printed instructions.

PART 2 - PRODUCTS

2.1 MANUFACTURER

A. Approved Manufacturers:
   1. ICI Paint Stores.
   2. PPG Industries, Pittsburgh Paints (Pittsburgh).
   3. Pratt and Lambert (P & L).
   4. The Sherwin-Williams Company (S-W).
   5. Kwal-Howells Paint.

2.2 MATERIALS

A. Material Quality: Provide best quality grade of various types of coatings as regularly manufactured by acceptable paint materials manufacturers. Materials not displaying manufacturer's identification as a standard, best-grade product will not be acceptable.

B. Proprietary names used to designate color or materials are not intended to imply that products of named manufacturers are required to exclusion of equivalent products of other manufacturers.

C. Federal Specifications establish minimum acceptable quality for paint materials. Provide written certification from paint manufacturer that materials provided meet or exceed these minimums.

D. Manufacturer's products which comply with coating qualitative requirements of applicable Federal Specifications, yet differ in quantitative requirements, may be considered for use when acceptable to Architect. Furnish material data and manufacturer's certificate of

performance to Architect for any proposed substitutions.

E. Color Pigments: Pure, non-fading, applicable types to suit substrates and service indicated.

F. Lead content in pigment, if any, is limited to contain not more than 0.06% lead, as lead metal based on the total non-volatile (dry-film) of paint by weight.
   1. This limitation is extended to interior surfaces and those exterior surfaces, such as stairs, decks, porches, railings, windows, and doors which are readily accessible to children under seven years of age.

PART 3 - EXECUTION

3.1 EXAMINATION

A. Applicator must examine areas and conditions under which painting work is to be applied and notify Contractor in writing of conditions detrimental to proper and timely completion of work. Do not proceed with work until unsatisfactory conditions have been correct in a manner acceptable to Applicator.

B. Starting of painting work will be construed as Applicator's acceptance of surfaces and conditions within any particular area.

C. Do not paint over dirt, rust, scale, grease, moisture, scuffed surfaces, or conditions otherwise detrimental to formation of a durable paint film.

3.2 PREPARATION

A. General: Perform preparation and cleaning procedures in accordance with paint manufacturer's instructions and as herein specified, for each particular substrate condition.

B. Provide barrier coats over incompatible primers or remove and reprime as required. Notify Architect in writing of any anticipated problems in using the specified coating systems with substrates primed by others.

C. Remove hardware, hardware accessories, machined surfaces, plates, lighting fixtures, and similar items in place and not to be finish-painted, or provide surface-applied protection prior to surface preparation and painting operations. Remove, if necessary, for complete painting of items and adjacent surfaces. Following completion of painting of each space or area, reinstall removed items.

D. Clean surfaces to be painted before applying paint or surface treatments. Remove oil and grease prior to mechanical cleaning. Program cleaning and painting so that contaminants from cleaning process will not fall onto wet, newly-painted surfaces.

E. Ferrous Metals: Clean ferrous surfaces, which are not galvanized or shop-coated, of oil, grease, dirt, loose mill scale and other foreign substances by solvent or mechanical cleaning.
   1. Caulk fabrication joints in hollow metal door frames which paint application cannot bridge.

F. Touch-up shop-applied prime coats wherever damaged or bare, where required by other sections of these specifications. Clean and touch-up with same type shop primer.

G. Galvanized Surfaces: Clean free of oil and surface contaminants with non-petroleum based solvent.

H. Materials Preparation:
1. Mix and prepare painting materials in accordance with manufacturer's directions.
2. Maintain containers used in mixing and application of paint in a clean condition, free of foreign materials and residue.
3. Stir materials before application to produce a mixture of uniform density, and stir as required during application. Do not stir surface film into material. Remove film and, if necessary, strain material before using.

3.3 APPLICATION

A. General: Apply paint in accordance with manufacturer's directions. Use applicators and techniques best suited for substrate and type of material being applied.
1. Paint colors, surface treatments, and finishes, are indicated in "schedules" of the contract documents.
2. Provide finish coats which are compatible with prime paints used.
3. Apply additional coats when undercoats, stains or other conditions show through final coat of paint, until paint film is of uniform finish, color and appearance. Give special attention to insure that surfaces, including edges, corners, crevices, welds, and exposed fasteners receive a dry film thickness equivalent to that of flat surfaces.
4. Paint surfaces behind movable equipment same as similar exposed surfaces. Paint surfaces behind permanently-fixed equipment with prime coat only before final installation of equipment.
5. Paint back sides of access panels, and removable or hinged covers to match exposed surfaces.
6. Finish doors on tops, bottoms and side edges same as faces, unless otherwise indicated.
7. Sand lightly between each succeeding enamel or varnish coat.
8. Omit first coat (exterior faces of surfaces which have been shop-primed and touch-up painted, unless otherwise indicated.

B. Scheduling Painting: Apply first-coat material to surfaces that have been cleaned, pretreated or otherwise prepared for painting as soon as practicable after preparation and before subsequent surface deterioration.
1. Allow sufficient time between successive coatings to permit proper drying. Do not recoat until paint has dried to where it feels firms, does not deform or feel sticky under moderate thumb pressure, and application of another coat of paint does not cause lifting or loss of adhesion of the undercoat.
2. Minimum Coating Thickness: Apply materials at not less than manufacturer's recommended spreading rate, to establish a total dry film thickness as indicated or, if not indicated, as recommended by coating manufacturer.

C. Mechanical and Electrical Work: Painting of mechanical and electrical work is limited to those items exposed on the roof.
1. Mechanical items to be painted include, but are not limited to, the following:
   a. Piping, pipe hangers, and supports.
   b. Roof mounted mechanical units.
   c. Ductwork, where exposed.
   e. Motor, mechanical equipment, and supports.
   f. Accessory items.
2. Electrical items to be painted include, but are not limited to, the following:

a. Conduit and fittings.

D. Prime Coats: Apply prime coat of material which is required to be painted or finished, and which has not been prime coated by others.

1. Recoat primed and sealed surfaces where there is evidence of suction spots or unsealed areas in first coat, to assure a finish coat with no burn-through or other defects due to insufficient sealing.

E. Pigmented (Opaque) Finishes: Completely cover to provide an opaque, smooth surface of uniform finish, color, appearance and coverage. Cloudiness, spotting, holidays, laps, brush marks, runs, sags, ropiness or other surface imperfections will not be acceptable.

F. Completed Work: Match approved samples for color, texture and coverage. Remove, refinish or repaint work not in compliance with specified requirements.

3.4 FIELD QUALITY CONTROL

A. The right is reserved by Owner to invoke the following material testing procedure at any time, and any number of times during period of field painting:

1. Owner will engage services of an independent testing laboratory to sample paint being used. Samples of materials delivered to project site will be taken, identified and sealed, and certified in presence of Contractor.

a. Testing laboratory will perform appropriate tests for any or all of following characteristics: Abrasion resistance, apparent reflectivity, flexibility, washability, absorption, accelerated weathering, dry opacity, accelerated yellowness, recoating, skinning, color retention, alkali resistance and quantitative materials analysis.

b. If test results show that material being used does not comply with specified requirements, Contractor may be directed to stop painting work, and remove non-complying paint; pay for testing; repaint surfaces coated with rejected paint; remove rejected paint from previously painted surfaces if, upon repainting with specified paint, the two coatings are non-compatible.

3.5 CLEAN-UP AND PROTECTION

A. Clean-Up: During progress of work, remove from site discarded paint materials, rubbish, cans and rags at end of each work day.

1. Upon completion of painting work, clean window glass and other paint spattered surfaces. Remove spattered paint by proper methods of washing and scraping, using car not to scratch or otherwise damage finished surfaces.

B. Protection: Protect work of other trades, whether to be painted or not, against damage by painting and finishing work. Correct any damage by cleaning, repairing or replacing, and repainting, as acceptable to Architect.

1. Provide "Wet Paint" signs as required to protect newly-painted finishes. Remove temporary protective wrappings provided by others for protection of their work, after completion of painting operations.

2. At completion of work of other trades, touch-up and restore all damaged or defaced painted surfaces.

C. Extra Stock: Deliver stock or maintenance materials to Owner. Furnish maintenance material matching products installed, packaged with protective covering for storage and identified with appropriate labels.

1. Paint: Furnish not less than one (1) full gallon for each color and type of paint installed.

3.6 EXTERIOR PAINT SCHEDULE

A. General: Provide the following Paint systems for the various substrates, as indicated.

1. METAL (Aluminum)

a. Latex Systems

(1) Gloss Finish

1st Coat: S-W DTM Acrylic Gloss Coating, B66 Series
2nd Coat: S-W DTM Acrylic Gloss Coating, B66 Series
(10 mils wet, 4 mils dry per coat)

2. METAL (Galvanized)

a. Latex Systems

(1) Gloss Finish

1st Coat: S-W DTM Acrylic Gloss Coating, B66 Series
2nd Coat: S-W DTM Acrylic Gloss Coating, B66 Series
(10 mils wet, 4 mils dry per coat)

3. METAL (Miscellaneous and Ornamental Iron, Handrails, Ladders, Roof Hatches, Mechanical equipment)

a. Latex Systems

(1) Gloss Finish

1st Coat: S-W DTM Acrylic Primer/Finish, B66W1
(6 mils wet, 3 mils dry)
2nd Coat: S-W DTM Acrylic Gloss Coating, B66 Series
3rd Coat: S-W DTM Acrylic Gloss Coating, B66 Series
(10 mils wet, 4 mils dry per coat)

END OF SECTION 09900

DIVISION 10 THRU DIVISION 14

Not Used

DIVISION 15 - MECHANICAL

Section 15600	Plumbing General Requirements
Section 15610	Summary of Work for Plumbing
Section 15623	Storm Drainage System
Section 15641	Domestic Water System
Section 15661	Fuel Gas System
Section 15770	Snow Melting Equipment

SECTION 15600 - PLUMBING GENERAL REQUIREMENTS

1.01 REGULATIONS, PERMITS, AND INSPECTIONS

A. Regulations: All materials, equipment and installation must comply with all applicable codes, rules, and regulations, all of which must be considered a part of these specifications.

B. All electric operated equipment shall be listed and/or bear the label of a nationally recognized laboratory such as FM, UL, CSA, ETL, MET, ARL, or as required by the authority having jurisdiction.

C. Permits: Obtain and pay for all permits and licenses required.

D. Inspections: All work must be inspected and approved by local authorities.

E. Prior to final approval, furnish the Architect certificates of inspections and approvals by the local authorities.

1.02 ACCESSIBILITY

A. Unions, valves, etc., shall not be placed in any pipe line at a location that will be inaccessible after the system is complete.

1.03 PROTECTION OF APPARATUS

A. At all times, take such precautions as are necessary to protect the apparatus from damage caused by theft, the weather, and all building operations. Failure to protect the material and apparatus adequately to the entire satisfaction of the Architect shall be sufficient cause for the rejection of any damaged material or equipment. All pipe and equipment openings shall be closed to prevent obstruction and damage.

1.04 CONTRACTION AND EXPANSION

A. Install all work in such a manner that its contraction and expansion will not do any damage to the pipes, the connected equipment, or the building. Install off-sets, swing joints, expansion joints, etc., as required to prevent excessive strains in the pipe work. All supports shall be installed to permit the materials to contract and expand freely without putting any strain or stress on any part of the system. Provide anchors as necessary.

1.05 MEASUREMENTS

A. Before ordering any material or doing any work, verify all measurements at the project and be responsible for their correctness. No extra charges or compensation will be allowed on account of any difference between actual dimensions and measurements indicated.

SECTION 15610 - SUMMARY OF WORK FOR PLUMBING

1.01 GENERAL - DESCRIPTION

A. Provide all labor, materials, equipment, and services necessary to furnish and install plumbing and piping systems as indicated or specified. Install and deliver all systems complete, in perfect working order, and in full accordance with the intent and meaning of the

drawings and specifications. The work, in general, consists of, but is not necessarily limited to, the following:

1. Provide disconnection of and reconnecting of all existing mechanical equipment as required for reroofing operations.
2. Valved outlets and connections to all heating, air conditioning, or electrical equipment with location as required and/or as shown on the drawings.
3. Insulation including cold, domestic hot water supply and return, roof drain, and over flow drain piping as specified.
4. Storm drainage system, including roof drains, as shown on the architectural and/or plumbing drawings.
5. Fuel gas system, including service line, and valved connections to all equipment using same.
6. Adequate supervision of erection, balancing, adjustments and instructions for proper operation and maintenance.
7. Payment for all plumbing permits and inspection fees.
8. Sterilization of potable water system.

SECTION 15623 - STORM DRAINAGE SYSTEM

1.01 GENERAL - DESCRIPTION

A. Provide all labor, material, equipment, and services necessary to furnish and install roof drain system as indicated or specified. Securely flash and anchor drains to deck and leaders. Use standard weight asphalt coated No-hub cast iron pipe and fittings for all roof drain piping in the building. Collect roof drain leaders together and terminate as indicated on the drawings. Connect No-hub cast iron pipe and fittings together with stainless steel shield clamp assemblies. Use approved pattern drainage type fittings on all roof drain piping.

1.02 TESTING

A. Fill system to highest point of system. Allow system to stand for four hours. If water level drops, check for leaks, repair as directed, and re-test until system is approved. Test and obtain approval on all underground piping before covering work.

1.03 PRODUCTS - PIPING

A. No-hub cast iron, conforming to CISPI No. 301 for piping 10" and smaller.

1.04 FITTINGS

A. No-hub cast iron drainage pattern fittings conforming to CISPI No. 301 for piping 10 inches and smaller.

1.05 NO-HUB COUPLINGS

A. Double band stainless steel couplings with neoprene liner conforming to CISPI No. 301 specifications.

1.06 ROOF DRAINS

A. Primary roof drain: J.R. Smith, model no. 1011-ERC, cast iron with flashing collar, gravel guard, underdeck clamp, and polyethylene dome.

1. Size: Match existing.

B. Secondary roof drain: J.R. Smith, model no. 1080-ERC with 2" water dam, cast iron body with flashing clamp, gravel stop, under deck clamp, and polyethylene dome.
   1. Size: Match primary roof drain size.

C. Downspout Nozzle: J.R. Smith, brase downspout nozzle with sheeps tongue.
   1. Size: Match drain line size.

1.07 EXECUTION - INSTALLATION

A. Pitch roof drain leaders at a uniform slope of 1/4" per foot where possible and 1/8" per foot minimum unless otherwise indicated on the drawings. Coordinate location of leaders with mechanical ductwork.

B. Use reducing fitting or recessed reducers to make changes in pipe size.

C. Make all changes in directions by the appropriate use of 45 degree wyes, half wyes, long sweep 1/4 bends, 1/6, 1/8, or 1/16 bends.

SECTION 15641 - DOMESTIC WATER SYSTEM

1.01 GENERAL - DESCRIPTION

A. Provide all labor, materials, equipment and services necessary to furnish and install a domestic water system complete as indicated or specified to existing equipment. Use type "L" hard copper for all water lines.

1.02 DISINFECTION

A. Disinfect the water distribution system thoroughly with a solution containing not less than 50 parts per million of available chlorine. For the chlorinating material, use sodium hypochlorite solution conforming to Federal Specification 0-8-441, Grade D, and introduce into the system in a manner approved by the Architect. Allow the disinfection solution to remain in the system for a period of 8 hours, during which time all valves and faucets shall be opened and closed several times. After disinfection, flush the solution from the system with clean water until the residual chlorine content is not greater than 0.2 parts per million, unless otherwise directed. Provide test report to Architect after completion of disinfection.

1.03 TESTING

A. Test domestic water system with a minimum of 125 psi hydrostatic pressure, hold for four (4) hours.

1.04 PRODUCTS - PIPING

A. Type "L" hard drawn copper, conforming to ASTM B-88.

1.05 FITTINGS

A. Provide wrought copper type fittings conforming to ANSI B16.22 for all connections to copper piping.

1.06 SOLDER

A. Lines 1/2" thru 2": Use 95/5 solder with suitable flux.

B. Lines 2-1/2" and larger: Use Aircosil 45, or other silver brazing alloy of equivalent melting point and physical properties. Use Aircosil flux, or equal suitable to brazing alloy.

1.07 EXECUTION - INSTALLATION

A. Extend water piping to all fixtures, outlets and equipment. Provide shut-off valves or fixture stops, as required for proper service.

B. Pitch water piping to drain and install all necessary drain valves.

C. Provide dielectric unions at connections of dissimilar metals.

SECTION 15661 - FUEL GAS SYSTEM

1.01 GENERAL - DESCRIPTION

A. This section describes the labor, materials and installation requirements necessary to install fuel gas system to existing equipment.

1.02 GENERAL

A. Use black steel pipe with malleable iron screwed fitting for all gas line piping 1-1/2 inches and smaller. Gas lines 2 inches and larger and all buried piping use welded fittings. Use flanges on piping 2 inches and larger and unions on piping 1-1/2 inches and smaller.

1.03 TESTING

A. Test fuel gas system with 60 psi air pressure and hold for four (4) hours.

1.04 PRODUCTS - PIPE

A. Above grade black steel pipe: Schedule 40 black steel conforming to ASTM A-53, grade A or B, seamless or welded pipe.

1.05 FITTINGS

A. Malleable Iron: Heavy black malleable iron conforming to ANSI B16.3, 150 psi SWP.

B. Welding Fittings: Black steel seamless full pattern welding fittings conforming to ANSI B16.9 and ANSI B16.25, 150 psi SWP.

1.06 UNIONS

A. Black malleable iron, screwed connections, ground iron to bronze seat, conforming to ASTM A.47, 250 psi SWP.

1.07 FLANGES

A. Black forged steel with weld neck flanges conforming to ANSI B16.5, 150 psi SWP.

1.08 VALVES

A. Appliance Service Valves: 1-1/4" and smaller, shall be Milwaukee A.G.A. approved "Butterball" valve.

1.09 EXECUTION - INSTALLATION

A. Coordinate piping with mechanical equipment installation and ductwork.

SECTION 15770 - SNOW MELTING EQUIPMENT

1.01 PERFORMANCE REQUIREMENTS

A. Roof Edge and Roof Drain De-icing Installations:
   1. At least 4 w/ln. ft. and not to exceed 15 w/ln. ft. on metal roofs.

1.02 MANUFACTURERS

A. System shall be as manufactured by Delta-Therm Corporation, 398 W. Liberty Street., P.O. Box 345, Wauconda, IL 60084 (Phone: 800-526-7887 Fax: 847-526-4456).

1.03 HEATING CABLE

A. Heating Cable: CSA Certified self regulating cable.

B. Self regulating cable construction shall consist of two 16 AWG , stranded, nickel plated copper bus wires between which a positive temperature coefficient conductive polymer heating element is placed.

C. Cable shall have a tinned copper braid and an ultra violet resistant overjacket.

D. Rating: 120 V.

1.04 ACCESSORIES

A. Thermostat:
   1. Thermostat shall be ambient sensing.

B. SMC-120G:
   1. Fully automated system requiring no operator settings or adjustments.
   2. Solid State Controller with 10 amp relay output contact
   3. Moisture Sensor to detect snow or ice in gutter
   4. Ambient thermostat to lock out heater above 35°F
   5. System shall have timers.

1.05 INSTALLATION

A. Complete installation shall conform to appropriate local codes and shall be in accordance

with manufacturer s specification.

1.06 FIELD QUALITY CONTROL

A. Perform insulation resistance (megger) test on each cable heater before and after installation. Minimum acceptable megger reading shall be 10 megohms.

DIVISION 16 - ELECTRICAL

Section 16010	General Provisions
Section 16100	Basic Materials and Methods
Section 16110	Conduit
Section 16120	Conductors

SECTION 16010 - GENERAL PROVISIONS

1.01 SCOPE

A. This Division shall cover the furnishing of all labor, equipment and materials and performing all operations in connection with the disconnection of and reconnecting of existing electrical service to but not limited to mechanical equipment, etc.

B. There are many interfaces between the work involved with this Division and the work in other Divisions. Be aware of the responsibilities at the interfaces. In addition, coordinate with all equipment suppliers to verify the installation requirements prior to rough-ins.

1.02 CODES AND REGULATIONS

A. All work shall comply with all local laws, ordinances and regulations applicable to the electrical installation, applicable building codes, NFPA, OSHA, and with the requirements of the National Electrical Code, latest edition, as approved by the local inspector.

1.03 STANDARDS FOR MATERIALS AND WORKMANSHIP

A. All material shall be new and shall bear the inspection label of Underwriter's Laboratories, Inc. (UL).

B. The published standards and requirements of the National Electrical Manufacturer's Association (NEMA), the American National Standards Institute (ANSI), the Institute of Electrical and Electronic Engineers (IEEE) and the American Society of Testing Materials (ASTM) shall govern and apply where applicable.

C. Specified catalog numbers and trade or manufacturers names are intended to describe the material, devices, or apparatus desired for type, style and quality. Similar materials of other manufacturers, if of equal quality, capacity or character may be substituted in conformity with the provisions of the General and Supplementary Conditions.

1.04 COORDINATION

A. Before any piping, conduit, outlets, or equipment are located in any area, coordinate the space requirements with all trades. Such shall be arranged so that space conditions will allow all trades to install their work, and will also permit access for future maintenance and repair.

B. Piping, ductwork, conduit and equipment installed at variance with the above requirements shall be relocated and/or revised to conform with the above requirements without incurring additions to the Contract.

1.05 PROTECTION OF MATERIALS

A. All conduit and other openings shall be kept protected to prevent entry of foreign matter. Fixtures, equipment, and apparatus shall be kept covered for protection against dirt, water, chemical or mechanical damage before and during construction.

B. The original finish, including shop coat of paint of fixtures, apparatus or equipment that has been damaged shall be restored without incurring additions to the Contract in time or price.

1.06 CUTTING AND PATCHING

A. The Contractor is responsible for all cutting and patching, including escutcheon plates where necessary, whether or not such cutting and patching is shown or indicated.

1.07 ACCESS TO ELECTRICAL ITEMS

A. The contractor is responsible for maintaining access to all concealed electrical equipment, apparatus, or devices whether, or not, shown or indicated. Where access panels are required, refer to Architect for approved means, methods and appearance.

SECTION 16100 - BASIC MATERIALS AND METHODS

1.01 BRANCH CIRCUITS

A. Branch circuits, where new branch circuits may be required, shall be multiwire two (2), three (3), and four (4) wire circuits, run from the panels to outlets as indicated on the drawings. Each set of three (3) or less ungrounded conductors in the same conduit enclosure shall have a neutral conductor, which shall be sized for not less than the unbalanced current of its associated ungrounded conductors.

SECTION 16110 - CONDUIT

1.01 GENERAL

A. Conduits and electrical metallic tubing shall bear the Underwriters' label and shall be steel galvanized. Minimum size of conduits for branch circuit wiring shall be 1/2".

B. Where the word "conduit" is used in this specification, it shall mean either thick wall rigid metal conduit, intermediate metal conduit, rigid non-metallic conduit or electrical metallic tubing as set forth herewith.

1.02 EXECUTION

A. Conduits shall be concealed, wherever possible, except as noted or shown otherwise.

B. Exposed conduits shall be run parallel to or at right angles with the adjacent wall corners. Support exposed conduits on the roof by means of utility line supports as specified in Section 07510 - Asphalt Built-Up Roofing.

C. Conduits shall be grounded as provided by the National Electrical Code. Paint conduit threads with 'LPS Zinc Rich' where conduits are installed below grade or where male threads are non-galvanized. Prevent lodgement of plaster, dirt or trash in conduits, boxes and fittings. Seal conduits with plastic or metal caps on conduit ends. Store conduit in racks above ground.

D. Where conduits are run above ceilings they shall be supported from the building structure, independent of ceiling system support. Supports shall occur on minimum 10 ft. centers and within 3 ft. of an outlet or junction box.

SECTION 16120 - CONDUCTORS

1.01 GENERAL

A. Conductors shall be 600 volt insulated copper of 98% conductivity, single conductor unless otherwise indicated. Every coil of wire shall be in the original wrapping when delivered to the job site.

1.02 PRODUCTS

A. Branch circuit conductors shall be a minimum of #12 AWG type THW, THWN, THHN, XHHW. Conductors #2 and larger shall be type XHHW unless noted otherwise. #10 size or smaller may be solid, or stranded; #8 and larger shall be stranded.

1.03 EXECUTION

A. Conductors shall be installed in conduit. The number of conductors installed in any conduit shall not be greater than the number for which the conduit is approved.

B. No conductors shall be pulled into conduit until the conduit system is complete. Ideal #77, Carlon-Slikum, Burndy "Slikon", or "Y-ER-EAS" pulling compound shall be used in pulling conductors into conduit.

C. Conductors shall be continuous from outlet to outlet and from outlet to junction box. No joints or splices in conductors will be allowed in the conduit.

D. Connections to circuit breakers and disconnect switches, to the mains in panels, and taps and splices in conductors #8 and larger, shall be made with solderless lugs and connectors.

E. Insulation on branch circuit conductors #10 and smaller throughout the electrical system shall be color coded. Color coding for each phase, neutral or ground wire shall conform to the electrical code.

Detail Manual

Project Number 0619
DFCM PROJECT # 06017640

Dixie State College of Utah

Auto Trades Building Re-roof

225 South 700 East, St George, Utah 84770

August 27, 2006

Axis Architects

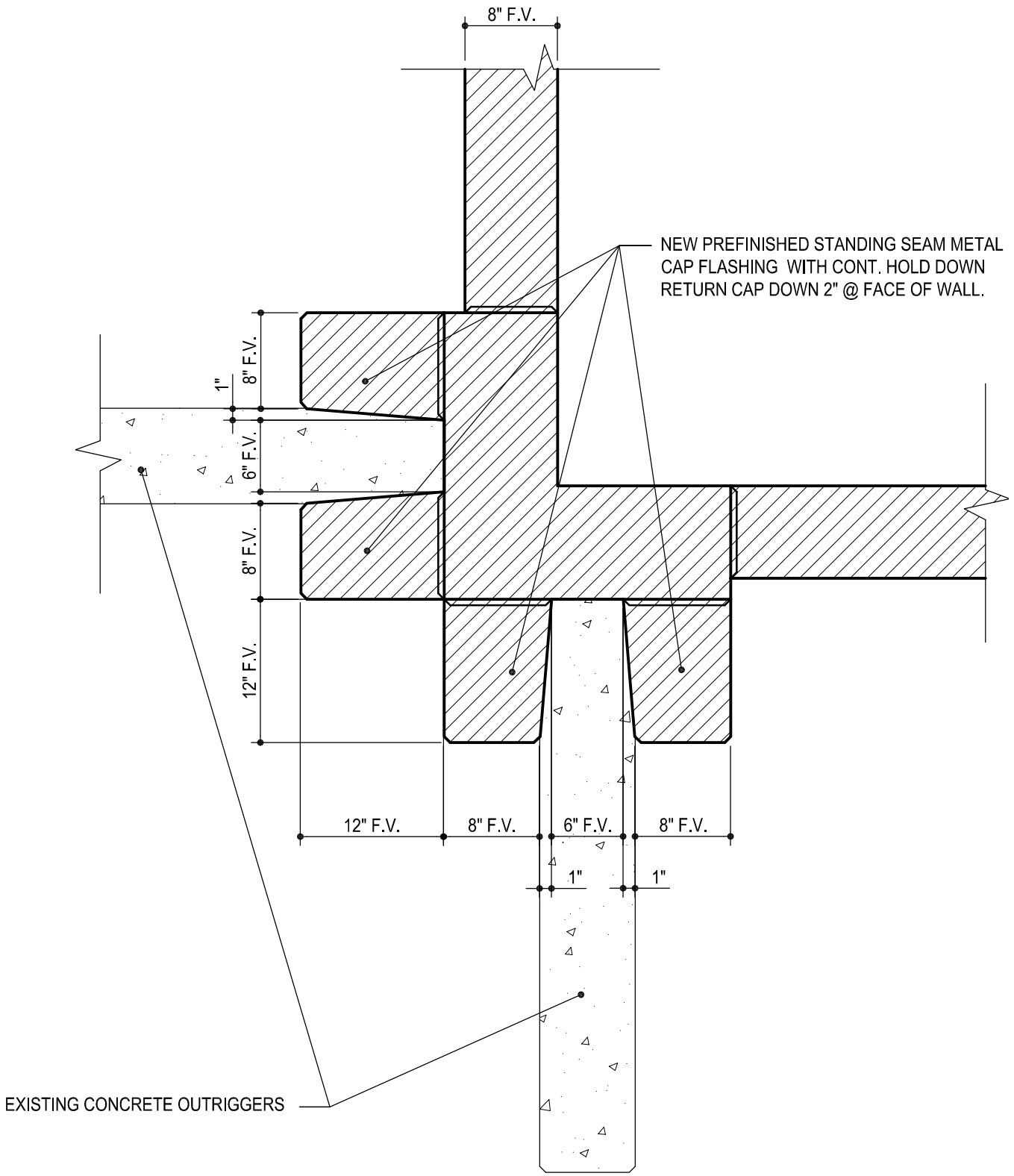

DET. NAME: PREFINISHED METAL CAP FLASHING @ CORNER TYP. DET NUMBER:

SCALE: 1"=1'

REVISION:

PROJECT: AUTO TRADES BUILDING-DIXIE STATE COLLEGE OF UTAH

RF-01

Axis Architects

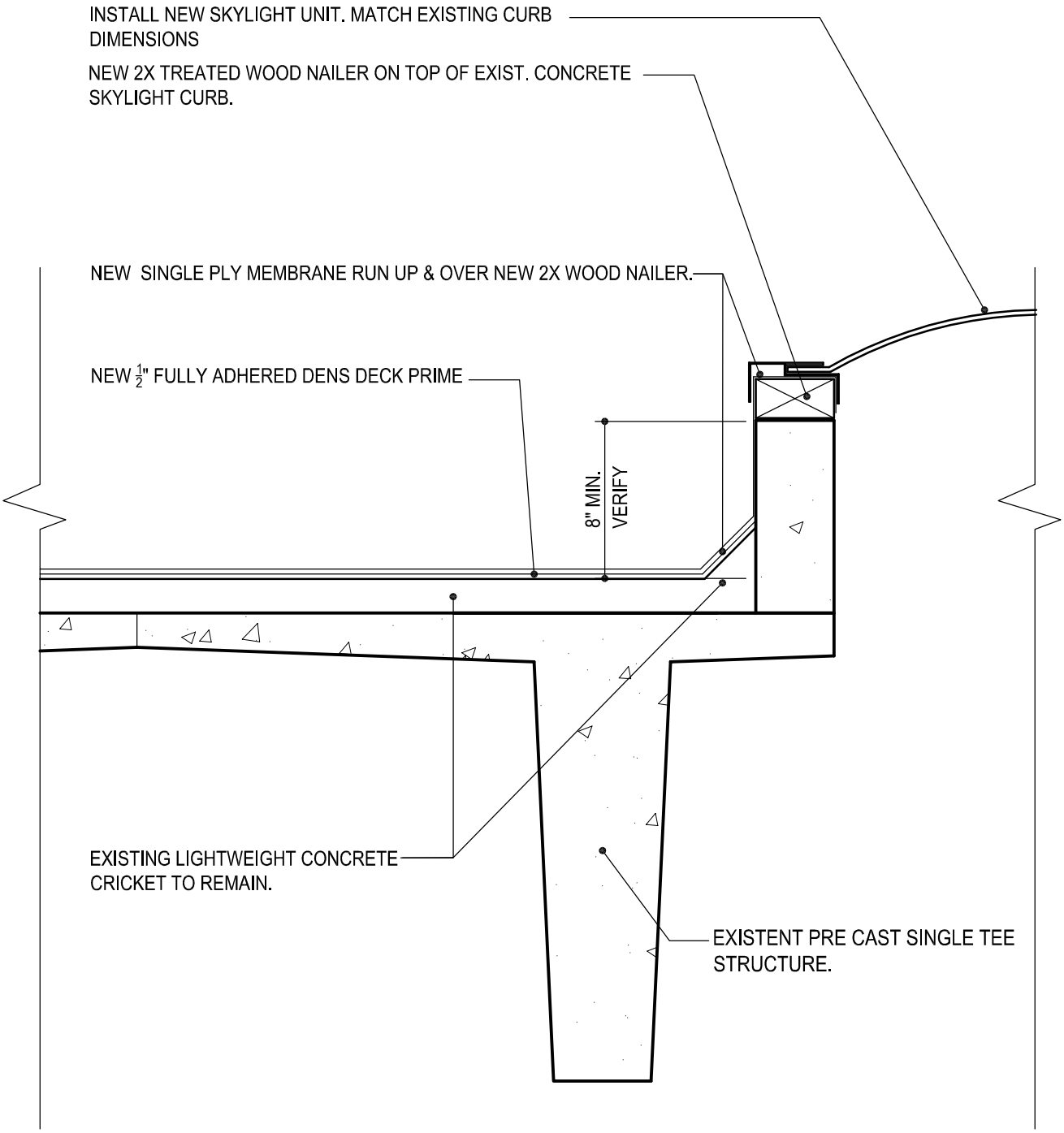

DET. NAME: SKILIGHT DETAIL

DET NUMBER:

SCALE: 1' 1/2=1'

REVISION:

PROJECT: AUTO TRADES BUILDING-DIXIE STATE COLLEGE OF UTAH

RF-02

Axis Architects

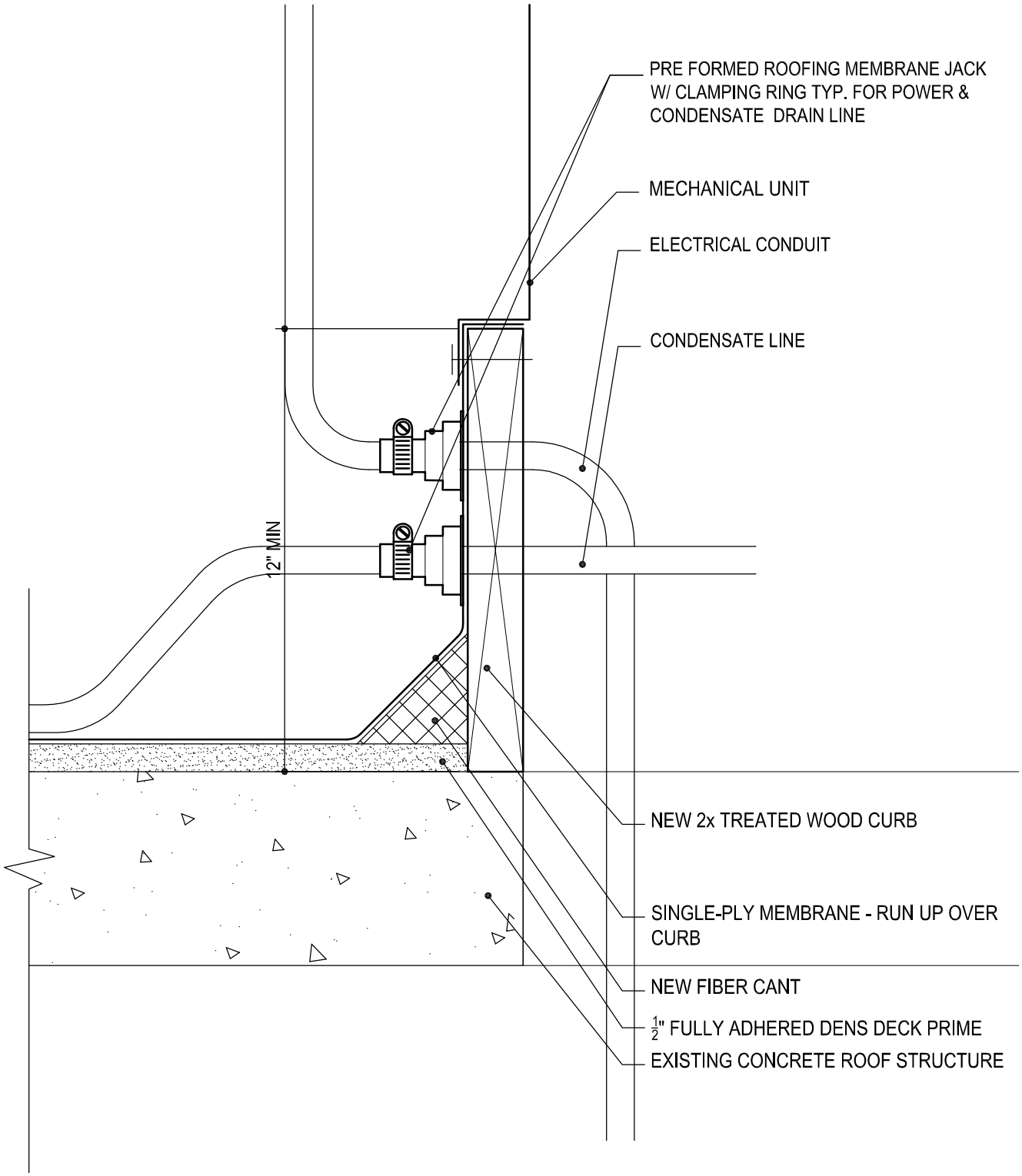

DET. NAME: NEW MECH. CURB

DET NUMBER:

SCALE: 3"=1'-0"

REVISION:

PROJECT: AUTO TRADES BUILDING-DIXIE STATE COLLEGE OF UTAH

RF-03

Axis Architects

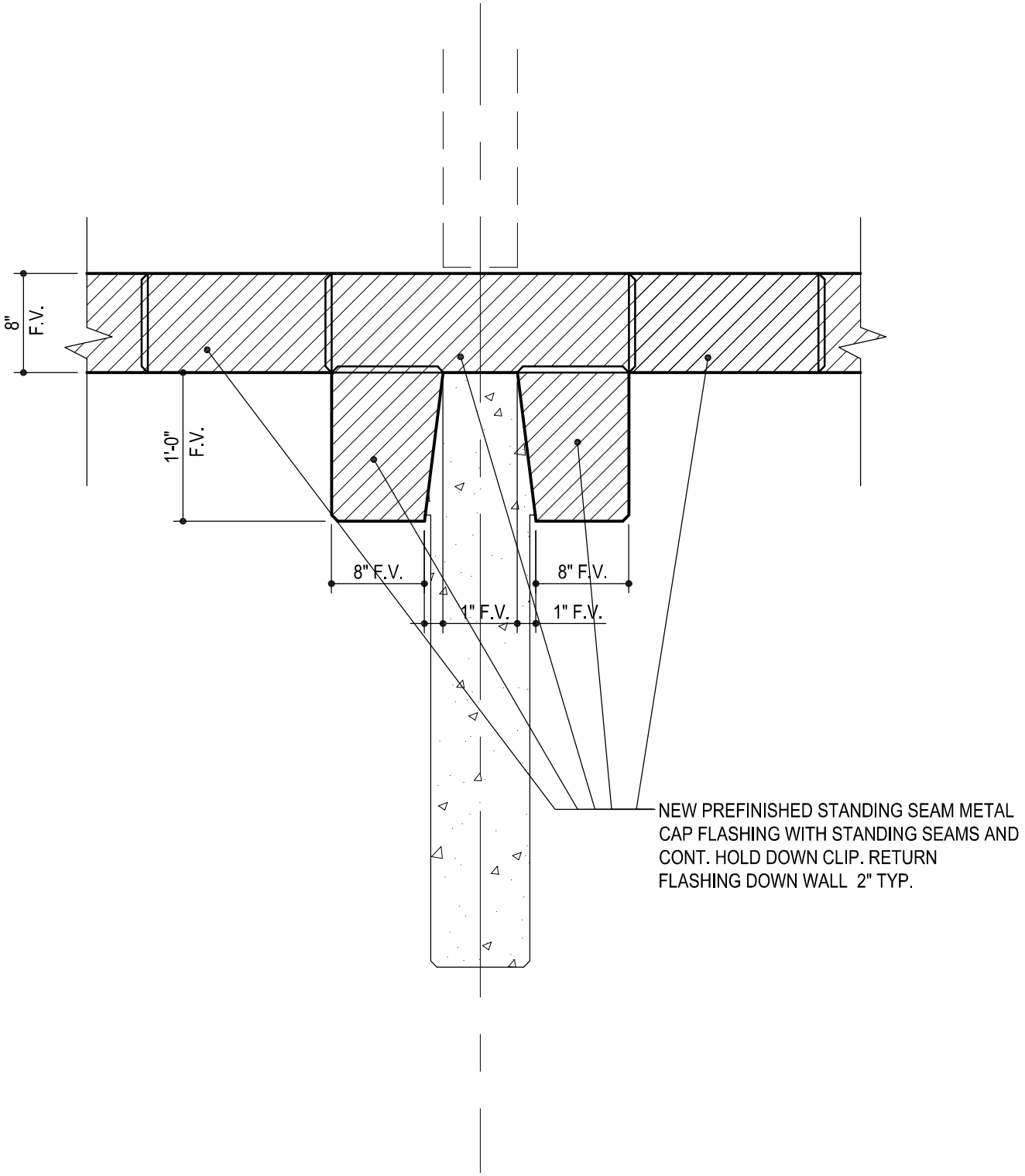

DET. NAME: PREFINISHED METAL CAP FLASHING @ OUTRIGGER

DET NUMBER:

SCALE: 1'=1'

REVISION:

PROJECT: AUTO TRADES BUILDING STATE COLLEGE OF UTAH

RF-04

Axis Architects

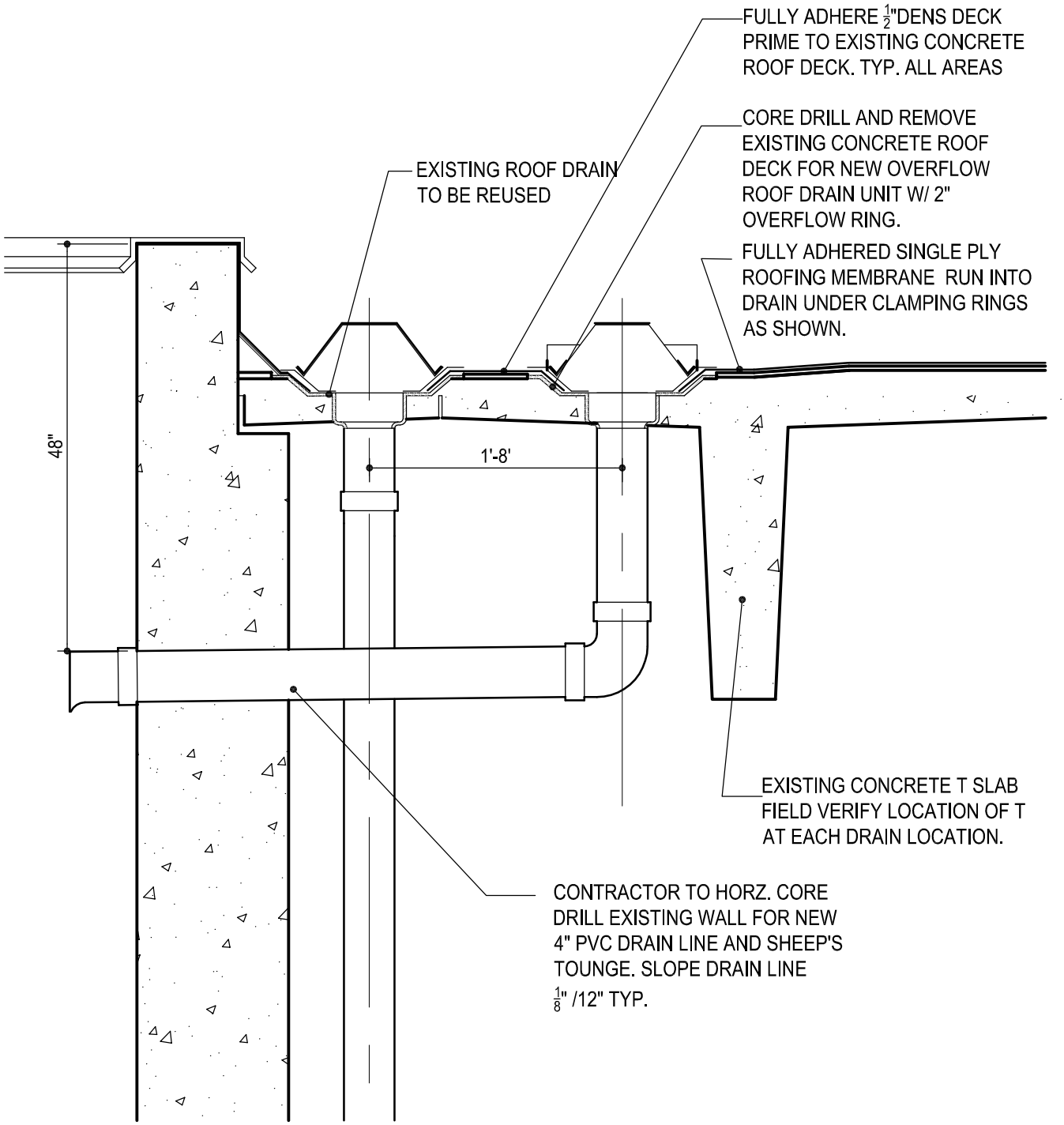

DET. NAME: DRAIN DETAIL

DET NUMBER:

SCALE: 1"=1'

REVISION:

PROJECT: AUTO TRADES BUILDING- DIXIE STATE COLLEGE OF UTAH

RF-05

Axis Architects

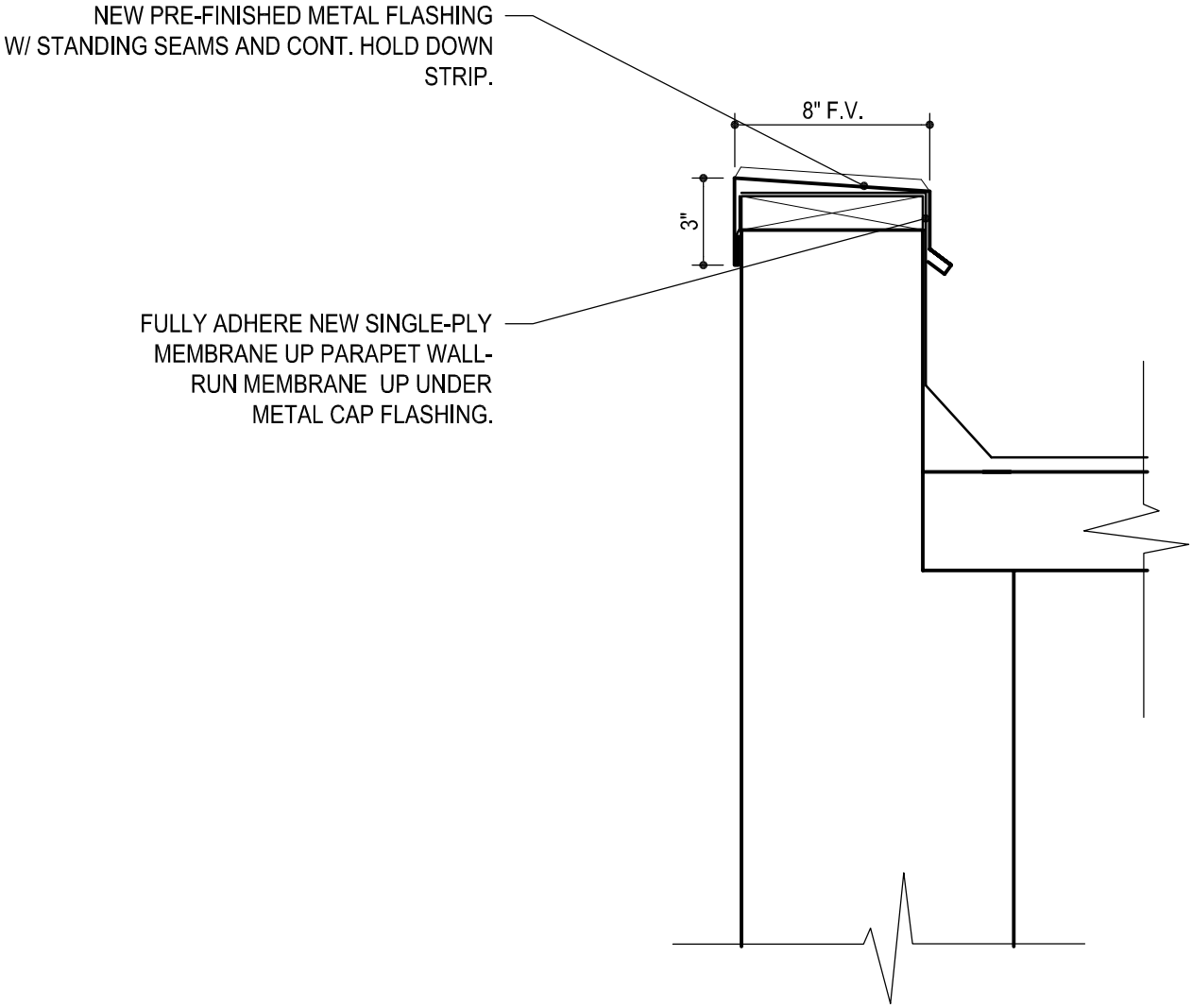

DET. NAME: PARAPET CAP FLASHING DETAIL

DET NUMBER:

SCALE: 1 1/2"=1'-0"

REVISION:

PROJECT: AUTO TRADES BUILDING - DIXIE STATE COLLEGE OF UTAH

RF-06

Axis Architects

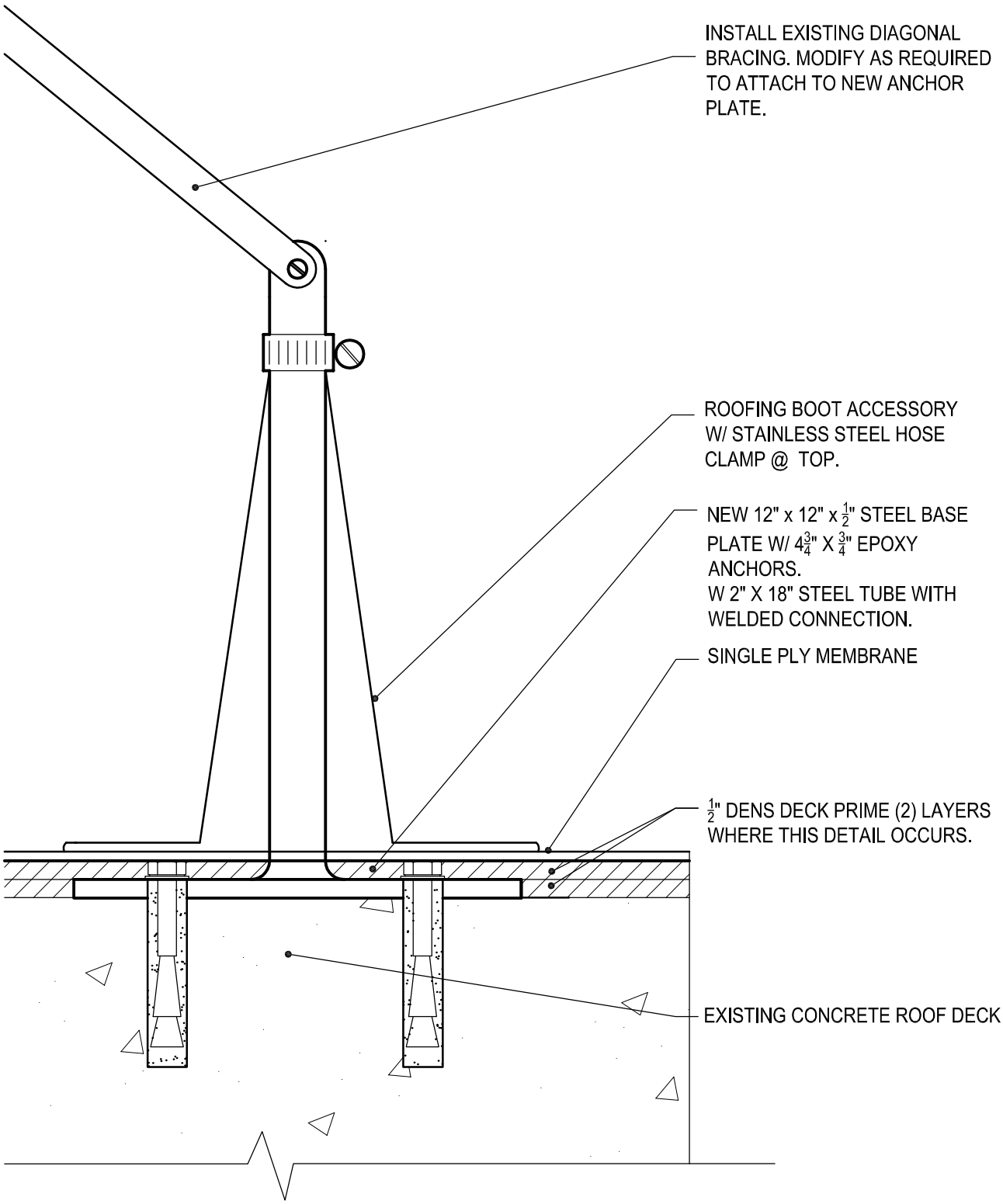

DET. NAME: ANCHOR PLATE

DET NUMBER:

SCALE: 3"=1'-0"

REVISION:

PROJECT: AUTO TRADES BUILDING-DIXIE STATE COLLEGE OF UTAH.

RF-07

Axis Architects